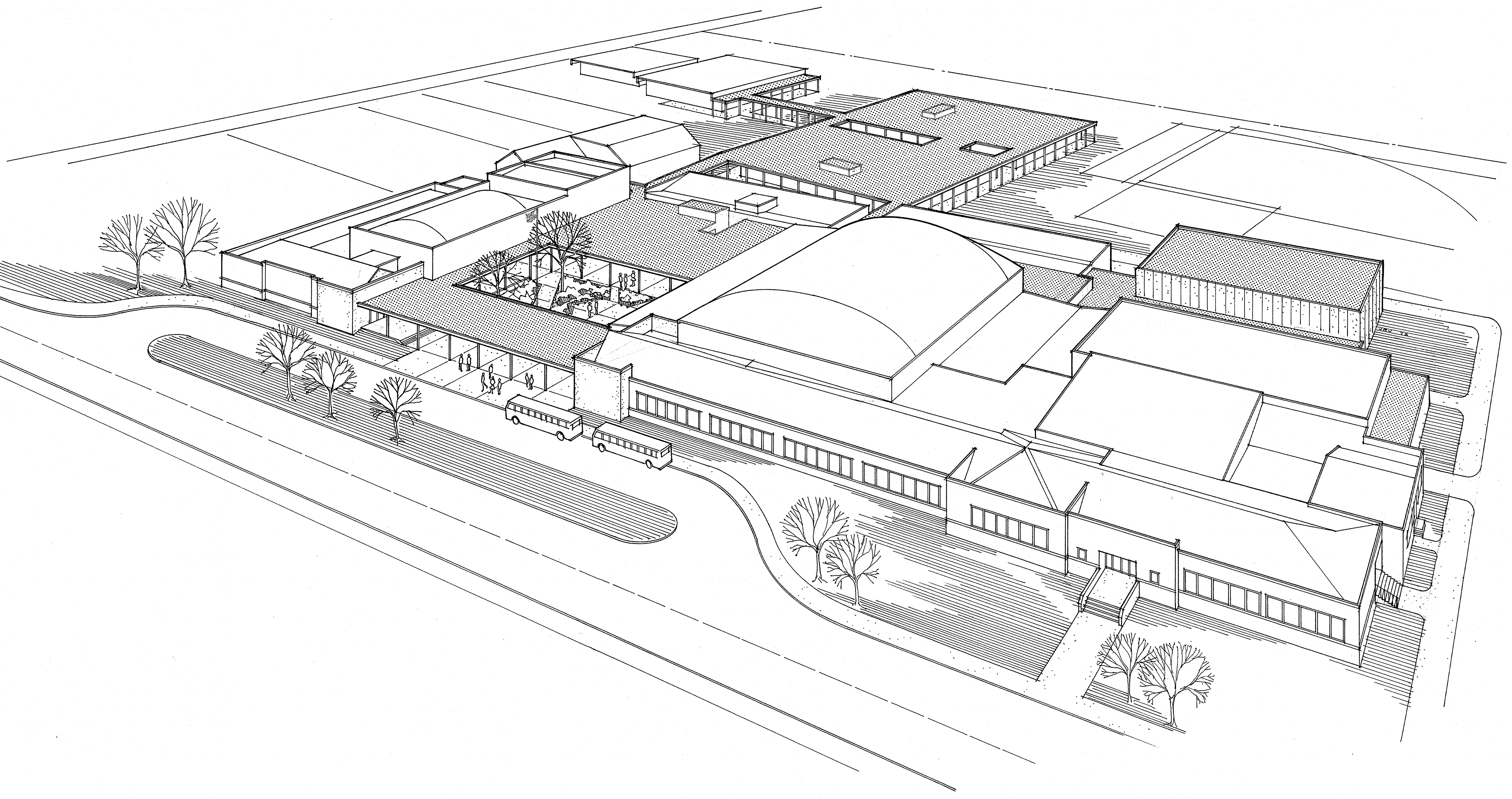

Sweet Home High School
additions and alterations 1974
District 55 Linn County Oregon

Architects: Hamlin Martin Schultz & Geyer, Eugene, Oregon
Mech.-Elec. Engrs: Marquess & Marquess, Springfield, Oregon

Index to Drawings

ARCHITECTURAL

A 1 SITE PLAN
A 2 DEMOLITION PLAN
A 3 FOUNDATION PLAN & DETAILS - SECTOR A
A 4 FLOOR PLAN - SECTOR A
A 5 CEILING & ROOF FRAMING PLAN, DETAILS - SECTOR A
A 6 SECTIONS - SECTOR A
A 7 ROOF PLAN, DETAILS - SECTORS A & B
A 8 EXTERIOR ELEVATIONS - SECTORS A & B
A 9 EXTERIOR ELEVATIONS & DETAILS SECTORS - A & B
A 10 FOUNDATION PLAN, DETAILS - SECTOR B
A 11 FLOOR PLAN - SECTOR B
A 12 ROOF FRAMING PLAN, DETAILS - SECTOR B
A 13 SECTIONS - SECTOR B
A 14 FLOOR PLAN - SECTOR C
A 15 ROOF PLAN, ROOF FRAMING PLAN - SECTOR C
A 16 SECTIONS, DETAILS - SECTOR C
A 17 FOUNDATION PLAN & DETAILS - SECTOR D
A 18 FLOOR PLAN, PLAN DETAILS - SECTOR D
A 19 ROOF FRAMING PLAN, DETAILS - SECTOR D
A 20 ROOF PLAN, SECTIONS & DETAILS - SECTOR D
A 21 SECTIONS, DETAILS - SECTOR D
A 22 EXTERIOR ELEVATIONS - SECTOR D
A 23 FOUNDATION PLAN & DETAILS - SECTOR E
A 24 FLOOR PLAN - SECTOR E
A 25 ROOF FRAMING PLAN - SECTOR E
A 26 ROOF PLAN, DETAILS - SECTOR E
A 27 SECTIONS - SECTOR E
A 28 FRAMING DETAILS - SECTOR E
A 29 EXTERIOR ELEVATIONS - SECTOR E
A 30 ROOM FINISH SCHEDULES - SECTORS A, B & C
A 31 ROOM FINISH SCHEDULES - SECTORS D & E
A 32 DOOR SCHEDULES
A 33 INTERIOR DOOR DETAILS
A 34 EXTERIOR DOOR ELEVATIONS & DETAILS
A 35 MISC. DETAILS
A 36 INTERIOR ELEVATIONS
A 37 CASEWORK
A 38 MILLWORK AND MISC. DETAILS

MECHANICAL

M 1 SITE PLAN
M 2 DETAILS, SCHEDULES
M 3 SECTOR A - FOUNDATION PLAN
M 4 SECTOR A - PLUMBING PLAN
M 5 SECTOR A - HEATING & VENTILATING
M 6 SECTOR B - FOUNDATION PLAN
M 7 SECTOR B - H.V.A.C. PLAN
M 8 HEAT PUMP DIAGRAM, REFERENCES, DETAILS
M 9 SECTOR C - FOUNDATION PLAN
M 10 SECTOR C - PLUMBING PLAN
M 11 SECTOR C - HEATING & VENTILATING
M 12 SECTOR D - FOUNDATION PLAN
M 13 SECTOR D - PLUMBING PLAN
M 14 SECTOR D - HEATING & VENTILATING
M 15 SECTOR E - FOUNDATION PLAN
M 16 SECTOR E - PLUMBING PLAN
M 17 SECTOR E - H.V.A.C. PLAN

ELECTRICAL

E 1 SITE PLAN
E 2 LIGHTING DETAILS, FIXTURE SCHEDULES
E 3 SECTOR A - LIGHTING PLAN
E 4 SECTOR B - LIGHTING PLAN
E 5 SECTOR C - LIGHTING PLAN
E 6 SECTOR D - LIGHTING PLAN
E 7 SECTOR E - LIGHTING PLAN
E 8 RISER DIAGRAM
E 9 POWER & COMMUNICATION DETAILS
E 10 SECTOR A - POWER PLAN
E 11 SECTOR B - POWER PLAN
E 12 SECTOR C - POWER PLAN
E 13 SECTOR D - POWER PLAN
E 14 SECTOR E - POWER PLAN

SYMBOLS

A1	SECTOR DESIGNATION, ROOM NUMBER
1A	DOOR NUMBER, SECTOR DESIGNATION
A 1	SECTION A, SHEET Nº 1
1 1	DETAIL Nº 1, SHEET Nº 1
A-1	EQUIPMENT ASSEMBLY A, SHEET Nº 1
1 | 1	INTERIOR ELEV 1, SHEET Nº 1
⊕	SPOT ELEVATION
SH-1	SHELVING DESIGNATION (SEE SCHED. SHT 38)

CONTRACTOR ACCESS THRU' EXST'G 12'-8" WIDE GATE IN CHAIN-LINK FENCE
AUTHORIZED PARKING AREA FOR CONSTRUCTION CREW BTWN FENCED PLAYFIELD & 18TH AVENUE
PROPOSED FORESTRY BLDG.
12'-0" WIDE CRUSHED ROCK ROADWAY FOR CONTRACTOR ACCESS. AT COMPLETION OF PROJECT REDRESS W/1" LIFT 1/4" MINUS CRUSHED ROCK
AREA TO BE USED FOR STOCKPILING EXCESS EARTH UPON COMPLETION OF JOB (STOCKPILING NOT LIMITED TO THIS AREA DURING CONST.)
6" PERFORATED DRAIN BY GENERAL CONTR.
F.L. 539.95 VERIFY W/ MECH.
CONNECTION OF 6" PERF DRAIN TO STORM DRAINAGE LINE BY MECH. SEE MECH. SITE PLAN.
0.5%
545
544
543
542
541
540
EXIST'G AUTO SHOP
EXIST'G CRAFT SHOP
SEE SHEET A26 FOR ADDITIVE ALT. "E" ARCADE & FLATWK.
7'-6"
BASE LINE
MATH-SCIENCE BUILDING
CONC. SLAB ELEV. 544.00
SECTOR E
LIBRARY-HOME ECONOMICS BLDG.
CONC. SLAB ELEV. 544.00
EXIST'G ASPHALT PATHWAY
EXIST 1/2" ROD
2-T.S. 6x6x.250 POSTS IN 12"Φ x 2'-0" DP FTG. FILL TUBE W/CONC. AND EXPOSE 3'-0" ABOVE ASPHALT SURFACE LOCATE AS SHOWN 2'-0" AHEAD OF FASCIA ABOVE
EXIST'G MAINT. BLDG
NEW ASPHALT MATCH EXIST'G SURFACES
8°-14'-00"
31'-11 1/4"
EXIST'G WOOD SHOP
EXIST 1/2 ROD
CONSTRUCTION STAGING AREA
LEAVE FOR SCHOOL USE UNTIL FINAL GRADING IS DONE
FUTURE FOOTBALL PRACTICE FIELD (N.I.C.)
FUTURE BASEBALL FIELD (N.I.C.)
PROVIDE TEMPORARY BARRIER W/ 4x4 POSTS AND ROPE TO PROTECT EXITWAY OUT OF EXIST'G CLASSRM CORRIDOR
PERFORATED DRAIN BY GEN. CONTRACTOR
PR. OF DOORS MAY BE BLOCKED OFF DURING PHASE I CONSTRUCTION
P.E. GYMNASIUM
CONC. SLAB (@ NORTH END) ELEV. 542.67 VERIFY. SHOULD BE SAME ELEV. AS S.W. CORNER OF SWIMMING POOL APRON
CONN. OF PERF DRAIN TO DRAIN LINE BY MECH.
18TH AVENUE
EXIST CONC. SLAB
ENGLISH CLASSROOMS
CONC. SLAB ELEV. 542.80
P.E DRESSING RMS
SWIMMING POOL
BOILER ROOM
AUDITORIUM
GYMNASIUM
CAFETERIA
SECTOR A
SECTOR B
SECTOR C
SECTOR D
BAND ROOM & AUDITORIUM FOYER
ADMINISTRATION
CONC. WALK
NEW ASPHALT PAVING AT FIRE LANE
C.B. DTL.
PLANTING AREA
CURB
EXIST'G CONC. SIDEWALK
"PK" NAIL
CONC. APRON
542.14
541.64
541.14
540.64
540.14
540.50
541.50
541.00
541.30
540.79
540.39
539.90
540.06
539.55
46'-0"R
14'-0"R
24'-6"
14'-0"
7'-6"
3'-0"
2'-0"
77'-0"
376'-0"
LONG STREET
BM 16-L. LOCATED AT THE S.W. CORNER OF TENNIS COURT FENCE ON NORTH SIDE OF LONG STREET. ELEVATION 540.56'
N

SITE PLAN
1/32" = 1'-0"

LEGEND

▨ NEW CONSTRUCTION
▨ MAJOR REMODELING
☐ MINOR OR NO REMODELING
▨ NEW CONCRETE (FLATWORK)
▨ NEW ASPHALT
543 NEW CONTOURS
— —543— — EXIST'G CONTOURS

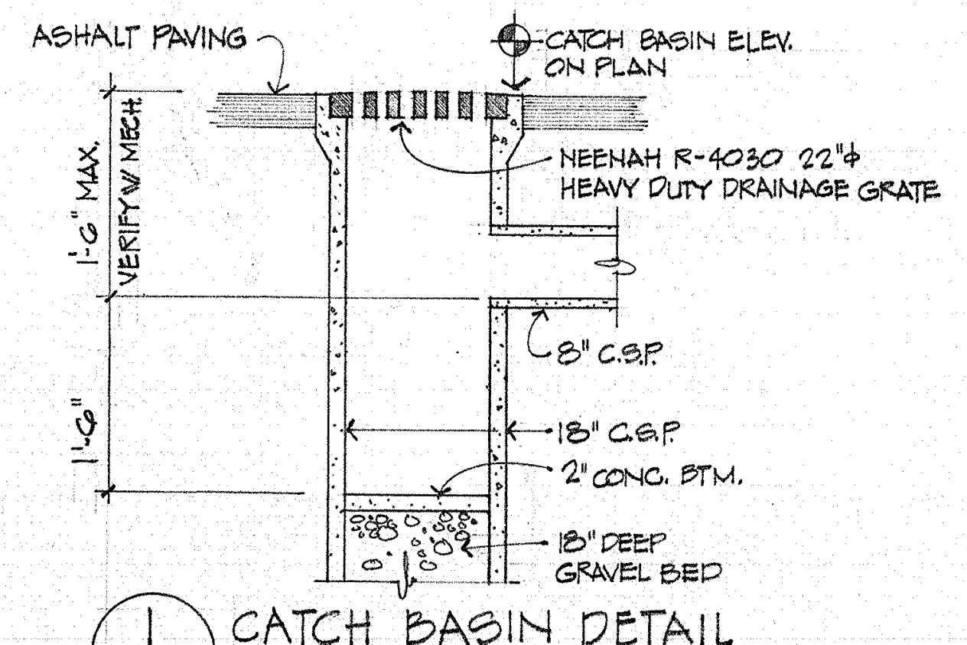
ASHALT PAVING
CATCH BASIN ELEV. ON PLAN
NEENAH R-4030 22"Φ HEAVY DUTY DRAINAGE GRATE
1'-6" MAX. VERIFY W/ MECH.
8" C.S.P.
18" C.S.P.
2" CONC. BTM.
18" DEEP GRAVEL BED
1'-6"

1/1 CATCH BASIN DETAIL
NO SCALE

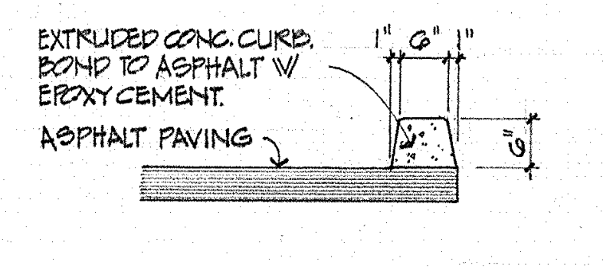
EXTRUDED CONC. CURB. BOND TO ASPHALT W/ EPOXY CEMENT.
ASPHALT PAVING
1" 6" 1"
6"

2/1 EXTRUDED CONC. CURB
1/2" = 1'-0"

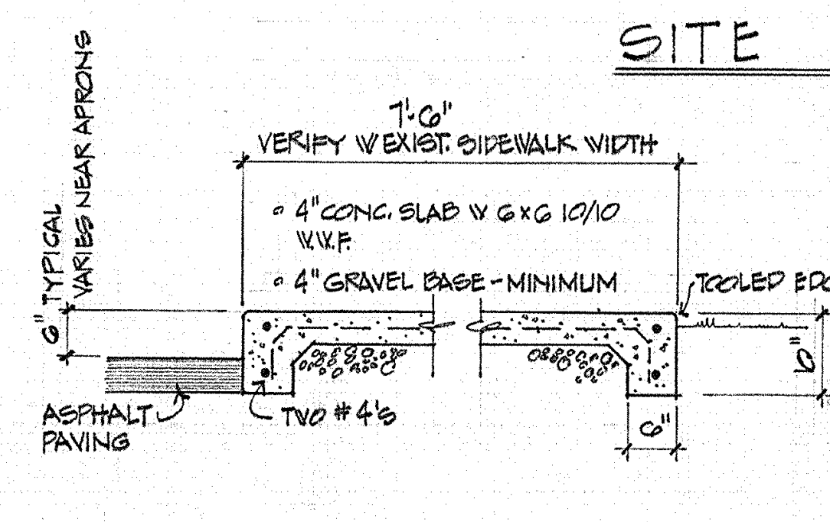
7'-6"
VERIFY W/ EXIST. SIDEWALK WIDTH
6" TYPICAL VARIES NEAR APRONS
4" CONC. SLAB W/ 6x6 10/10 W.W.F.
4" GRAVEL BASE - MINIMUM
TOOLED EDGE
ASPHALT PAVING
TWO #4's
6"

3/1 CONC. SIDEWALK
1/2" = 1'-0"

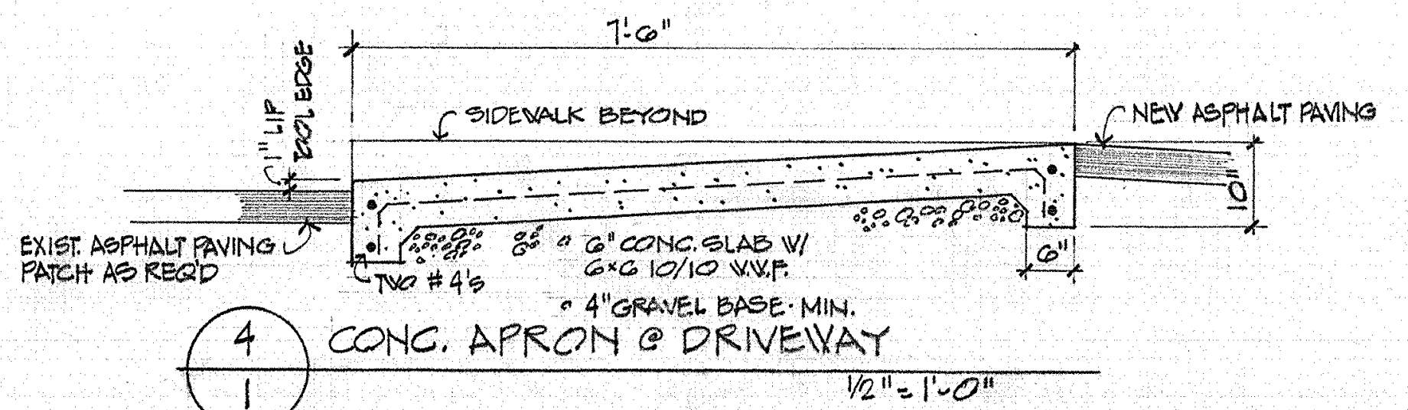
7'-6"
1" LIP TOOL EDGE
SIDEWALK BEYOND
NEW ASPHALT PAVING
EXIST. ASPHALT PAVING PATCH AS REQ'D
TWO #4's
6" CONC. SLAB W/ 6x6 10/10 W.W.F.
4" GRAVEL BASE MIN.
6"

4/1 CONC. APRON @ DRIVEWAY
1/2" = 1'-0"

SITE PLAN
SWEET HOME HIGH SCHOOL
ADDITIONS AND ALTERATIONS 1974
DISTRICT 55 LINN COUNTY OREGON

ARCHITECTS
HAMLIN, MARTIN,
SCHULTZ & GEYER
AIA
159 W. 12TH EUGENE, OREGON 97401

A
1
JOB NO.

REGISTERED ARCHITECT
CLARE K. HAMLIN
Clare K Hamlin
EUGENE, OREGON
STATE OF OREGON

MECHANICAL NOTES

I LABEL ALL CAPPED PIPES AND RECORD LOCATION ON SEPIA COPY OF THIS DRAWING.

ELECTRICAL NOTES

I DURING DEMOLITION
  - A. IDENTIFY, TAG & MARK ALL CONDUITS AND CONDUCTORS ENCOUNTERED (SHOWN OR NOT SHOWN HERE).
  - B. COMPLY WITH NOTES [1] & [2] AS APPLIED AT SPECIFIC LOCATIONS.

II ALL PANELS, FIXTURES, ELECTRICAL ITEMS, CONDUITS AND CONDUCTORS IN DEMOLITION AREAS ARE TO BE DISPOSED OF, NOT RETAINED FOR OWNERS USE UNLESS OTHERWISE NOTED.

III ELECTRICAL CONTRACTOR TO REMOVE AND STORE FIXTURES IN DEMOLISHED CORRIDORS FOR FUTURE USE.
  - [1] TAG AND IDENTIFY ALL CUT CONDUCTORS AND CONDUIT. NOTE LOCATIONS ON SEPIA COPY OF THIS DRAWING. VERIFY THAT CIRCUTS ARE DISCONNECTED FROM HOT PANELS PRIOR TO CUTTING.
  - [2] CUT OPEN CONDUCTORS OF INTERCOM SYSTEM AT SAME AREAS WHERE CONDUIT ARE CUT. TAG AND IDENTIFY.

IV EXIST. PENDANT TYPE, TWO TUBE, 48" & 96" LIGHT FIXTURES W/ WRAP AROUND LENSE IN RESOURCE CENTER & HOMEMAKING AND SEWING ROOMS TO BE REMOVED AND STORED FOR FUTURE USE BY ELECTRICAL CONTRACTOR. ABOVE ROOMS ARE IN SECTOR B AND ARE NOTED ON PLAN.

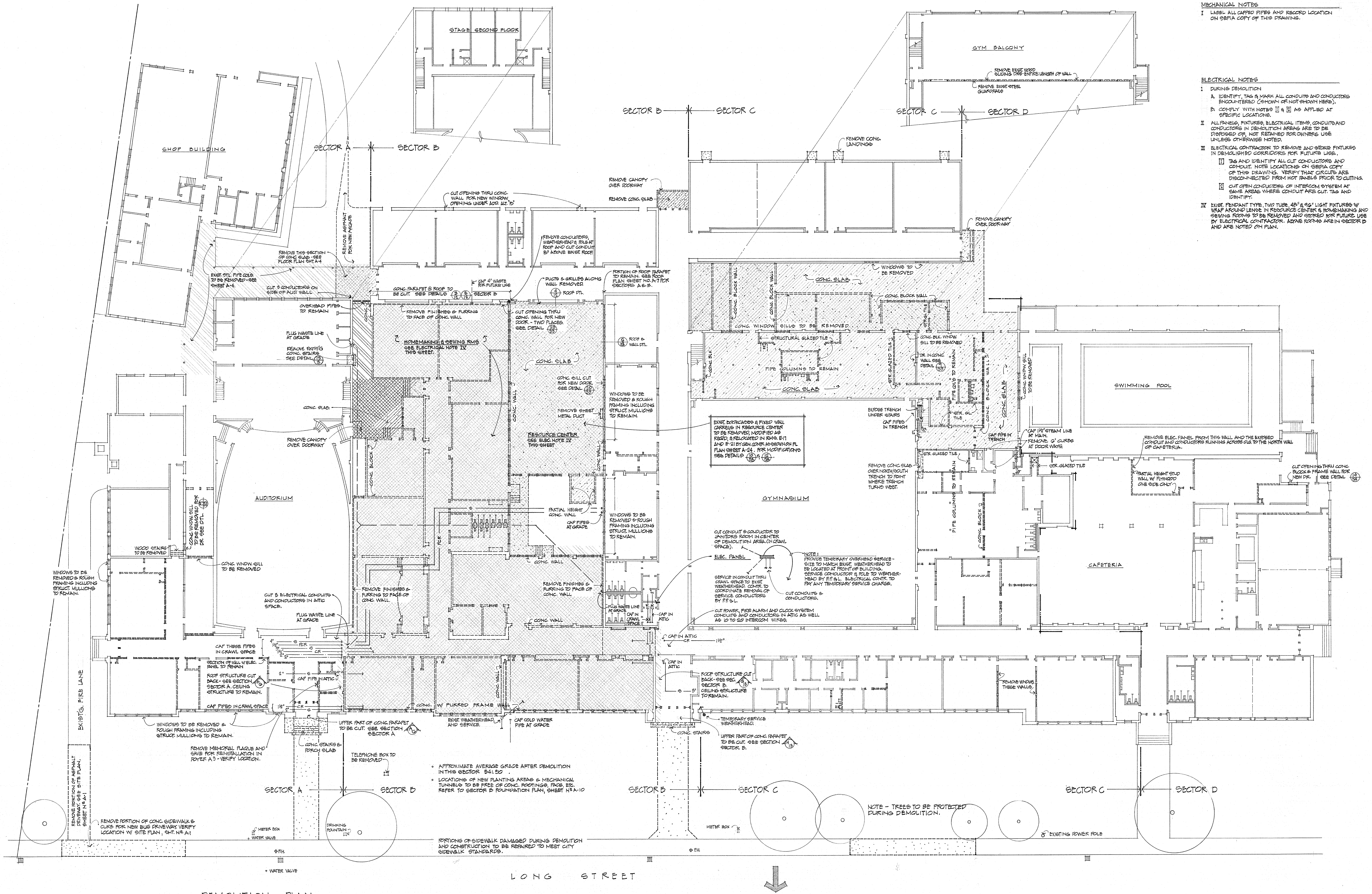
STAGE SECOND FLOOR
GYM BALCONY
REMOVE EXIST. WOOD SLIDING DRS. ENTIRE LENGTH OF WALL
REMOVE EXIST. STEEL GUARDRAILS
SHOP BUILDING
SECTOR A
SECTOR B
SECTOR C
SECTOR D
CUT OPENING THRU CONC. WALL FOR NEW WINDOW, OPENING UNDER ADD. ALT. "B"
REMOVE CONC. SLAB
REMOVE CANOPY OVER DOORWAY
REMOVE CONC. LANDINGS
REMOVE ASPHALT FOR NEW ARCADE
REMOVE THIS SECTION OF CONC. SLAB - SEE FLOOR PLAN SHT. A-4
EXIST. STL. PIPE COL'S. TO BE REMOVED - SEE SHEET A-4.
CUT 3 CONDUCTORS ON SIDE OF AUD. WALL
REMOVE CONDUCTORS, WEATHERHEAD & POLE AT ROOF AND CUT CONDUIT 8" ABOVE EXIST. ROOF.
CONC. PARAPET @ ROOF TO BE CUT. SEE DETAILS 3/12 5/12
CAP 4" WASTE FOR FUTURE USE
DUCTS & GRILLES ALONG WALL REMOVED.
4/12 ROOF DTL.
PORTION OF ROOF PARAPET TO REMAIN. SEE ROOF PLAN SHEET NO. A-7 FOR SECTORS A & B.
OVERHEAD PIPES TO REMAIN
REMOVE FINISHES & FURRING TO FACE OF CONC. WALL
CUT OPENING THRU CONC. WALL FOR NEW DOOR. - TWO PLACES. SEE DETAIL 23/33
PLUG WASTE LINE AT GRADE
REMOVE EXIST'G CONC. STAIRS SEE DETAIL 13/3
HOMEMAKING & SEWING RMS. SEE ELECTRICAL NOTE IV THIS SHEET.
6/12 ROOF & WALL DTL.
CONC. SLAB
CONC. SILL CUT FOR NEW DOOR. SEE DETAIL 20/33
WINDOWS TO BE REMOVED & ROUGH FRAMING INCLUDING STRUCT. MULLIONS TO REMAIN.
REMOVE SHEET METAL DUCT
CONC. WALL
CONC. BLOCK
RESOURCE CENTER SEE ELEC. NOTE IV THIS SHEET
AUDITORIUM
CONC. WNDW. SILL TO BE REMOVED FOR DR. SEE DTL. 17/33
WOOD STAIRS TO BE REMOVED
CONC. WNDW. SILL TO BE REMOVED
PARTIAL HEIGHT CONC. WALL
CAP PIPES AT GRADE
PCR
CUT 5 ELECTRICAL CONDUITS AND CONDUCTORS IN ATTIC SPACE.
CAP THESE PIPES IN CRAWL SPACE
S
CR
SECTION OF WALL W/ ELEC. PANEL TO REMAIN
ROOF STRUCTURE CUT BACK - SEE SECTION B/6 SECTOR A. CEILING STRUCTURE TO REMAIN.
CAP PIPE IN ATTIC
CAP PIPES IN CRAWL SPACE
CAP IN CRAWL SPACE
CAP IN ATTIC
CONC. W/ FURRED FRAME WALL
EXIST. WEATHERHEAD AND SERVICE.
CAP COLD WATER PIPE AT GRADE
WINDOWS TO BE REMOVED & ROUGH FRAMING INCLUDING STRUCT. MULLIONS TO REMAIN.
UPPER PART OF CONC. PARAPET TO BE CUT. SEE SECTION A/6 SECTOR A
CONC. STAIRS & PORCH SLAB
REMOVE MEMORIAL PLAQUE AND SAVE FOR REINSTALLATION IN FOYER A3 - VERIFY LOCATION.
TELEPHONE BOX TO BE REMOVED
EXISTG. FIRE LANE
REMOVE PORTION OF ASPHALT DRIVEWAY. SEE SITE PLAN, SHEET Nº A-1
REMOVE PORTION OF CONC. SIDEWALK & CURB FOR NEW BUS DRIVEWAY. VERIFY LOCATION W/ SITE PLAN, SHT. Nº A-1
METER BOX
WATER VALVE
DRINKING FOUNTAIN
F.H.
CONC. BLOCK WALL
CONC. WINDOW SILLS TO BE REMOVED
STRUCTURAL GLAZED TILE
PIPE COLUMNS TO REMAIN
CONC. BLK.
STR. GL. TILE
STR. GLAZED TILE
CONC. BLK. WNDW. SILL TO BE REMOVED
DR. IN CONC. WALL SEE DETAIL 9/33
PIPE COL'S TO REMAIN
WINDOWS TO BE REMOVED
CONC. WNDW. SILL TO BE REMOVED
SWIMMING POOL
EXPOSE TRENCH UNDER STAIRS
CAP PIPES IN TRENCH
CAP PIPE IN TRENCH
CAP 1½" STEAM LINE AT MAIN.
REMOVE 6" CURBS AT DOOR WAYS.
EXIST. BOOKCASES & FIXED WALL CARRELS IN RESOURCE CENTER TO BE REMOVED, MODIFIED AS REQ'D, & RELOCATED IN RMS. E-17 AND E-21 BY GEN. CONTR. AS SHOWN ON FL. PLAN SHEET A-24. FOR MODIFICATIONS SEE DETAILS 10/33 & 12/33.
REMOVE CONC. SLAB OVER NORTH/SOUTH TRENCH TO POINT WHERE TRENCH TURNS WEST.
GYMNASIUM
PIPE COLUMNS TO REMAIN
REMOVE ELEC. PANEL FROM THIS WALL AND THE EXPOSED CONDUIT AND CONDUCTORS RUNNING ACROSS CLG. TO THE NORTH WALL OF CAFETERIA.
PARTIAL HEIGHT STUD WALL W/ PLYWOOD ONE SIDE ONLY
CUT OPENING THRU CONC. BLOCK & FRAME WALL FOR NEW DR. SEE DETAIL 14/34
CAFETERIA
CUT CONDUIT & CONDUCTOR TO JANITORS ROOM IN CENTER OF DEMOLITION AREA. (IN CRAWL SPACE).
ELEC. PANEL
SERVICE IN CONDUIT THRU CRAWL SPACE TO EXIST. WEATHERHEAD. CONTR. TO COORDINATE REMOVAL OF SERVICE CONDUCTORS BY P.P.&L.
CUT CONDUITS & CONDUCTORS.
NOTE: PROVIDE TEMPORARY OVERHEAD SERVICE - SIZE TO MATCH EXIST. WEATHERHEAD TO BE LOCATED AT FRONT OF BUILDING. SERVICE CONDUCTOR & POLE TO WEATHERHEAD BY P.P.&L. ELECTRICAL CONTR. TO PAY ANY TEMPORARY SERVICE CHARGE.
CUT POWER, FIRE ALARM AND CLOCK SYSTEM CONDUITS AND CONDUCTORS IN ATTIC AS WELL AS 10 TO 20 INTERCOM WIRES.
ROOF STRUCTURE CUT BACK - SEE SEC. G/13 SECTOR B. CEILING STRUCTURE TO REMAIN.
REMOVE WNDWS. THESE WALLS.
TEMPORARY SERVICE WEATHERHEAD.
CONC. STAIRS
UPPER PART OF CONC. PARAPET TO BE CUT. SEE SECTION H/13 SECTOR B.
APPROXIMATE AVERAGE GRADE AFTER DEMOLITION IN THIS SECTOR 541.50.
LOCATIONS OF NEW PLANTING AREAS & MECHANICAL TUNNELS TO BE FREE OF CONC. FOOTINGS, PADS, ETC. REFER TO SECTOR B FOUNDATION PLAN, SHEET Nº A-10
NOTE - TREES TO BE PROTECTED DURING DEMOLITION.
PORTIONS OF SIDEWALK DAMAGED DURING DEMOLITION AND CONSTRUCTION TO BE REPAIRED TO MEET CITY SIDEWALK STANDARDS.
EXISTING POWER POLE
LONG STREET
N
1/16" = 1'-0"

DEMOLITION PLAN

THIS PLAN SHOWS MAJOR DEMOLITION WORK ONLY AND SHOULD BE USED IN CONJUNCTION WITH THE REST OF THE DRAWINGS.

⊧====⊧	WALL TO BE REMOVED - FRAME UNLESS OTHERWISE NOTED.
▬	BEARING WALL TO BE REMOVED, SHORE AS REQUIRED - FRAME UNLESS OTHERWISE NOTED.
▨	FLOOR CONSTRUCTION TO BE REMOVED - FRAME UNLESS OTHERWISE NOTED
▧	ROOF CONSTRUCTION TO BE REMOVED.
▩	ROOF AND FLOOR CONSTRUCTION TO BE REMOVED.

GENERAL NOTES

I FOR DEMOLITION OF FOOTBALL FIELD LIGHT STANDARDS SOUTH OF SCHOOL BLDG. SEE ELECTRICAL SITE PLAN E-1.

II REMOVE BACKSTOP AT SOUTH EAST END OF FOOTBALL FIELD SOUTH OF SCHOOL BLDG.

III ALL LOCKERS IN DEMOLISHED CORRIDORS AND P.E. LOCKER ROOMS TO BE REMOVED BY OWNER.

DEMOLITION PLAN
SWEET HOME HIGH SCHOOL
ADDITIONS AND ALTERATIONS 1974
DISTRICT 55 LINN COUNTY OREGON

ARCHITECTS
HAMLIN, MARTIN, SCHULTZ & GEYER AIA
159 W. 12TH EUGENE, OREGON 97401

A 2
JOB NO.

REGISTERED ARCHITECT
CLARE K. HAMLIN
Clare K Hamlin
EUGENE, OREGON
STATE OF OREGON

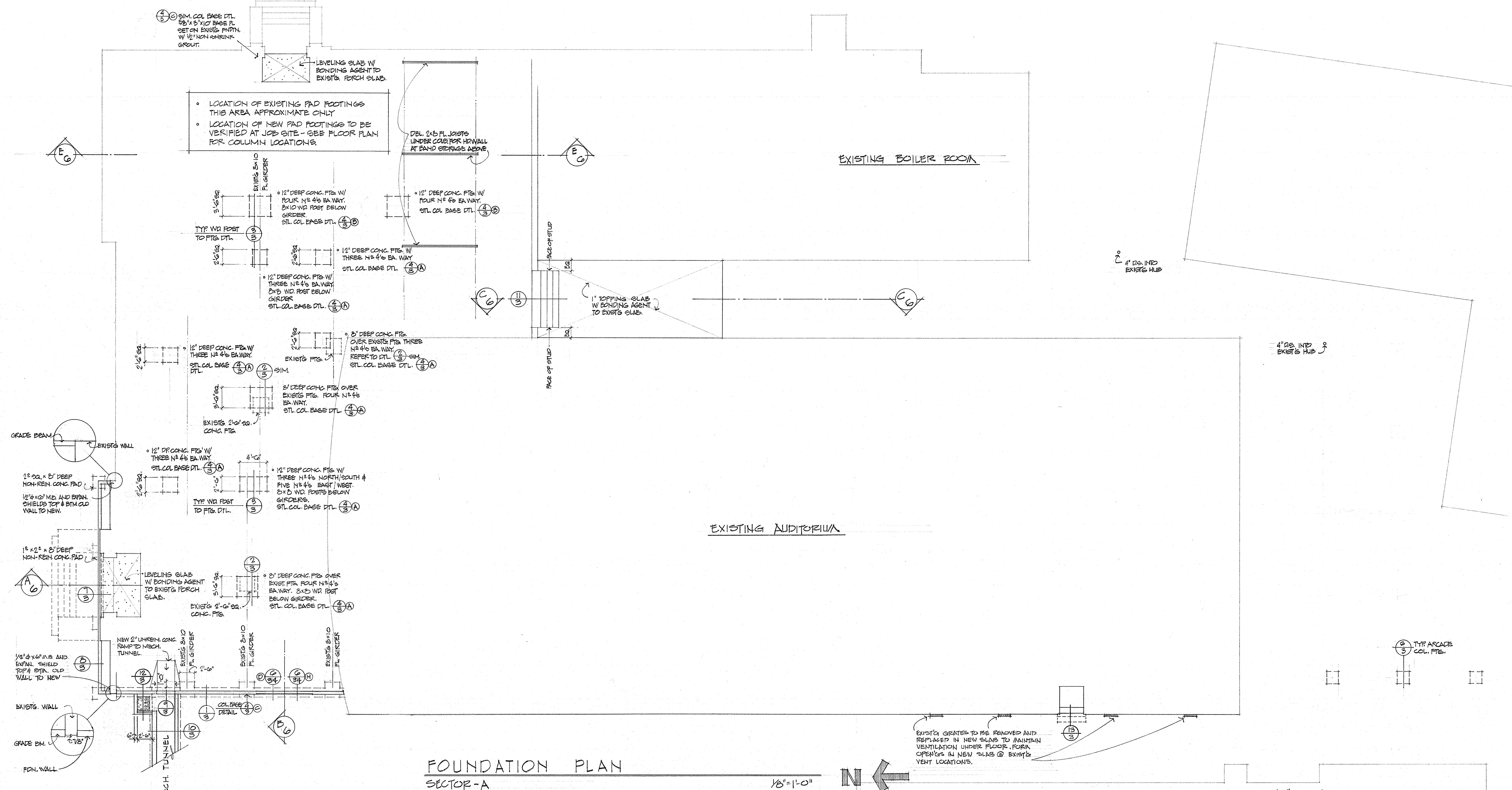
4/3 C SIM. COL BASE DTL. 5/8"x3"x10" BASE PL. SET ON EXISTG FNDTN. W/ 1/2" NON SHRINK GROUT.
LEVELING SLAB W/ BONDING AGENT TO EXIST'G. PORCH SLAB.
• LOCATION OF EXISTING PAD FOOTINGS THIS AREA APPROXIMATE ONLY
• LOCATION OF NEW PAD FOOTINGS TO BE VERIFIED AT JOB SITE - SEE FLOOR PLAN FOR COLUMN LOCATIONS.
DBL. 2x8 FL. JOISTS UNDER COLS. FOR HD.WALL AT BAND STORAGE ABOVE.
E 6
EXISTING BOILER ROOM
EXISTG 8x10 FL. GIRDER
3'-6" SQ.
• 12" DEEP CONC. FTG. W/ FOUR No 4's EA. WAY. 8x10 WD. POST BELOW GIRDER. STL. COL. BASE DTL. 4/3 B
• 12" DEEP CONC. FTG. W/ FOUR No 4's EA. WAY. STL. COL BASE DTL. 4/3 B
TYP. WD. POST TO FTG. DTL. 3/3
2'-6" SQ.
• 12" DEEP CONC. FTG. W/ THREE No 4's EA. WAY STL. COL. BASE DTL. 4/3 A
• 12" DEEP CONC. FTG. W/ THREE No 4's EA. WAY. 8x8 WD. POST BELOW GIRDER STL. COL. BASE DTL. 4/3 A
FACE OF STUD
EQ.
C 6
11/3
1" TOPPING SLAB W/ BONDING AGENT TO EXISTG SLAB.
4" DG. INTO EXISTG HUB
• 8" DEEP CONC. FTG. OVER EXISTG. FTG. THREE No 4's EA. WAY. REFER TO DTL. 2/3 SIM. STL. COL. BASE DTL. 4/3 A
EXIST'G FTG.
• 12" DEEP CONC. FTG. W/ THREE No 4's EA. WAY. STL. COL BASE DTL. 4/3 A
2/3 SIM.
8" DEEP CONC. FTG. OVER EXISTG FTG. FOUR No 4's EA. WAY. STL. COL. BASE DTL. 4/3 A
EXISTG. 2'-6" SQ. CONC. FTG.
GRADE BEAM
EXISTG WALL
2° SQ. x 8" DEEP NON-REIN. CONC. PAD
1/2"φx6" M.B. AND EXPAN. SHIELDS TOP & BTM. OLD WALL TO NEW.
• 12" DP. CONC. FTG. W/ THREE No 4's EA. WAY. STL. COL BASE DTL. 4/3 A
4'-6"
2'-6"
• 12" DEEP CONC. FTG. W/ THREE No 4's NORTH/SOUTH & FIVE No 4's EAST/WEST. 8x8 WD. POSTS BELOW GIRDERS. STL. COL. BASE DTL. 4/3 A
TYP. WD. POST TO FTG. DTL. 3/3
EXISTING AUDITORIUM
1° x 2° x 8" DEEP NON-REIN. CONC. PAD
A 6
7/3
LEVELING SLAB W/ BONDING AGENT TO EXIST'G PORCH SLAB.
2/3
• 8" DEEP CONC. FTG. OVER EXIST. FTG. FOUR No 4's EA. WAY. 8x8 WD. POST BELOW GIRDER. STL. COL. BASE DTL. 4/3 A
EXIST'G 2'-6" SQ. CONC. FTG.
NEW 2" UNREIN. CONC. RAMP TO MECH. TUNNEL.
EXIST'G 8x10 FL. GIRDER
2'-6"
1/2"φx6" M.B. AND EXPAN. SHIELD TOP & BTM. OLD WALL TO NEW
8/3
12/3
D 6/34
6/34 H
EXISTG. WALL
9/3
COL. BASE DETAIL 4/3 C
1/3
B 6
GRADE BM.
7/8"
10/3
6" 2'-6"
FDN. WALL
MECH. TUNNEL
4/3 C TYP. ARCADE COL. FTG.
EXIST'G GRATES TO BE REMOVED AND REPLACED IN NEW SLAB TO MAINTAIN VENTILATION UNDER FLOOR. FORM OPEN'GS IN NEW SLAB @ EXIST'G VENT LOCATIONS.
13/3
N

FOUNDATION PLAN
SECTOR-A 1/8"=1'-0"

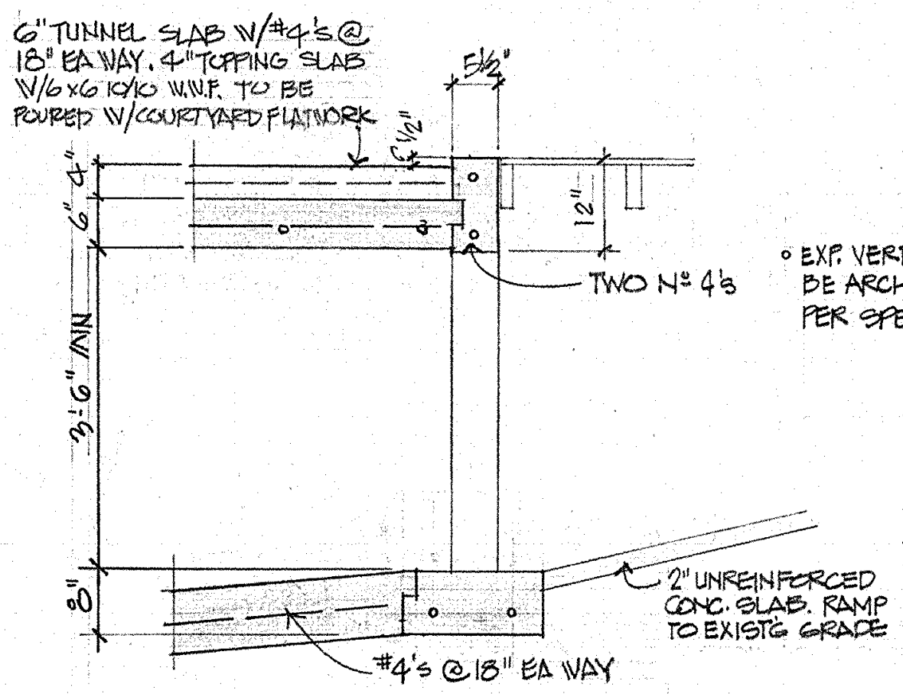
6" TUNNEL SLAB W/#4's @ 18" EA WAY. 4" TOPPING SLAB W/6x6 10/10 W.W.F. TO BE POURED W/COURTYARD FLATWORK
5 1/2"
4"
6"
4 1/2"
12"
TWO No 4's
3'-6" MIN.
8"
2" UNREINFORCED CONC. SLAB. RAMP TO EXISTG GRADE
#4's @ 18" EA WAY

9/3 OPENING @ TUNNEL
WEST FNDTN. WALL 1/2"=1'-0"

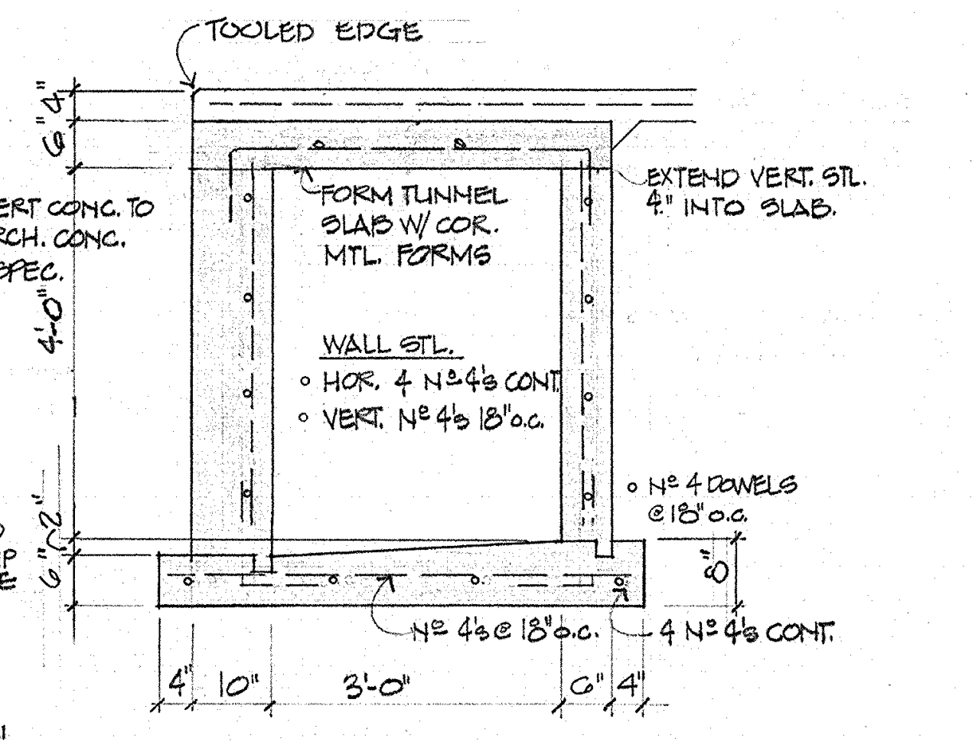
TOOLED EDGE
• EXP. VERT CONC. TO BE ARCH. CONC. PER SPEC.
FORM TUNNEL SLAB W/ COR. MTL. FORMS
EXTEND VERT. STL. 4" INTO SLAB.
WALL STL.
• HOR. 4 No 4's CONT.
• VERT. No 4's 18" o.c.
• No 4 DOWELS @18" o.c.
6" 4"
4'-0"
6" 2"
8"
No 4's @ 18" o.c.
4 No 4's CONT.
4" 10" 3'-0" 6" 4"

10/3 SECTION THRU
MECH. TUNNEL 1/2"=1'-0"

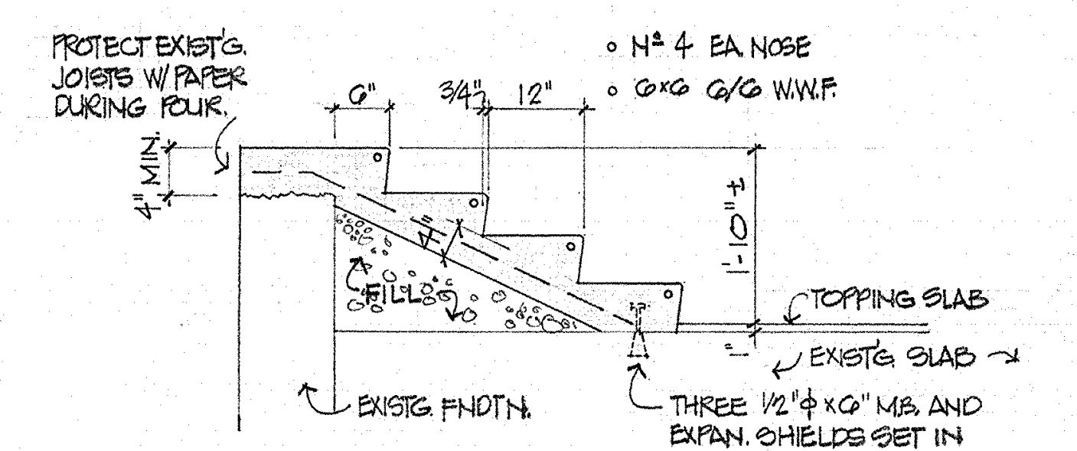
PROTECT EXIST'G. JOISTS W/ PAPER DURING POUR.
• No 4 EA. NOSE
• 6x6 6/6 W.W.F.
6" 3/4" 12"
4" MIN.
1'-10" ±
FILL
TOPPING SLAB
EXISTG SLAB
EXISTG. FNDTN.
THREE 1/2"φx6" M.B. AND EXPAN. SHIELDS SET IN EXISTG SLAB

11/3 STAIR DETAIL 1/2"=1'-0"

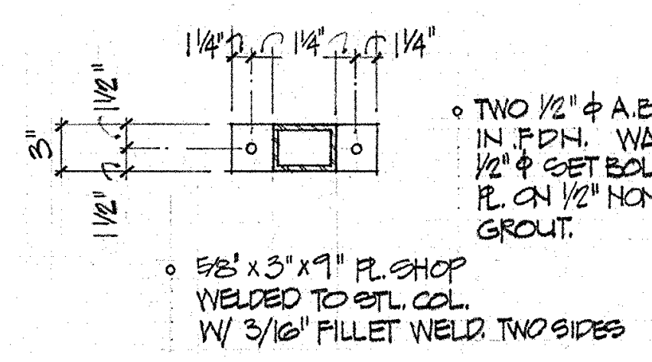
1 1/4" 1 1/4" 1 1/4"
3"
1 1/2"
• TWO 1/2"φ A.B. CAST IN FDN. WALL OR 1/2"φ SET BOLTS. SET PL. ON 1/2" NON-SHRINK GROUT.
• 5/8"x3"x9" PL. SHOP WELDED TO STL. COL. W/ 3/16" FILLET WELD. TWO SIDES

C 4"x3"x.250 TS
STEEL COL.

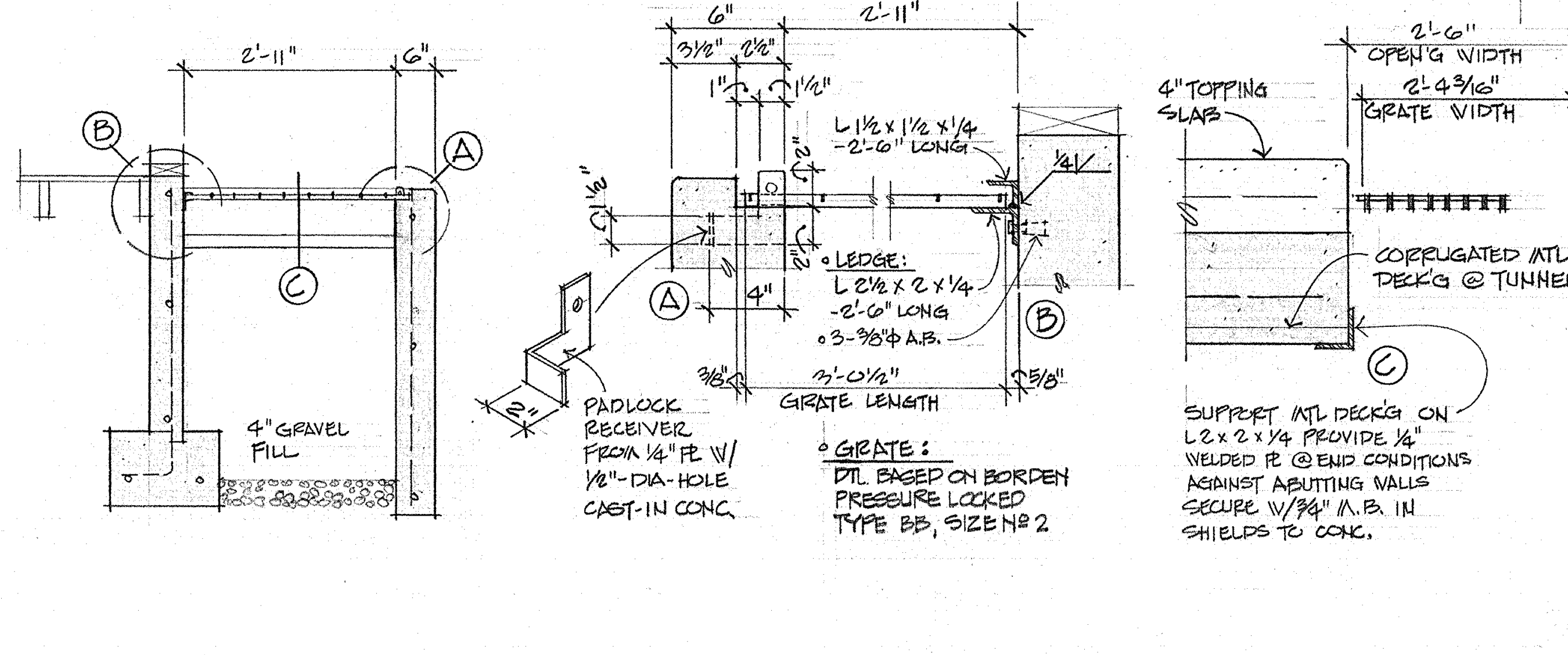
2'-11"
6"
B
A
C
4" GRAVEL FILL
3 1/2" 2 1/2"
1" 1 1/2"
L 1 1/2 x 1 1/2 x 1/4 -2'-6" LONG
1/4
• LEDGE: L 2 1/2 x 2 x 1/4 -2'-6" LONG
• 3-3/8"φ A.B.
4"
2"
PADLOCK RECEIVER FROM 1/4" PL. W/ 1/2"-DIA-HOLE CAST-IN CONC.
3/8" 3'-0 1/2" 5/8"
GRATE LENGTH
• GRATE: DTL. BASED ON BORDEN PRESSURE LOCKED TYPE BB, SIZE No 2
2'-6" OPEN'G WIDTH
2'-4 3/16" GRATE WIDTH
4" TOPPING SLAB
CORRUGATED MTL DECK'G @ TUNNEL
SUPPORT MTL DECK'G ON L2x2x1/4 PROVIDE 1/4" WELDED PL. @ END CONDITIONS AGAINST ABUTTING WALLS SECURE W/3/4" M.B. IN SHIELDS TO CONC.

12/3 TUNNEL VENT & ACCESS 1/2"=1'-0" & 1 1/2"=1'-0"

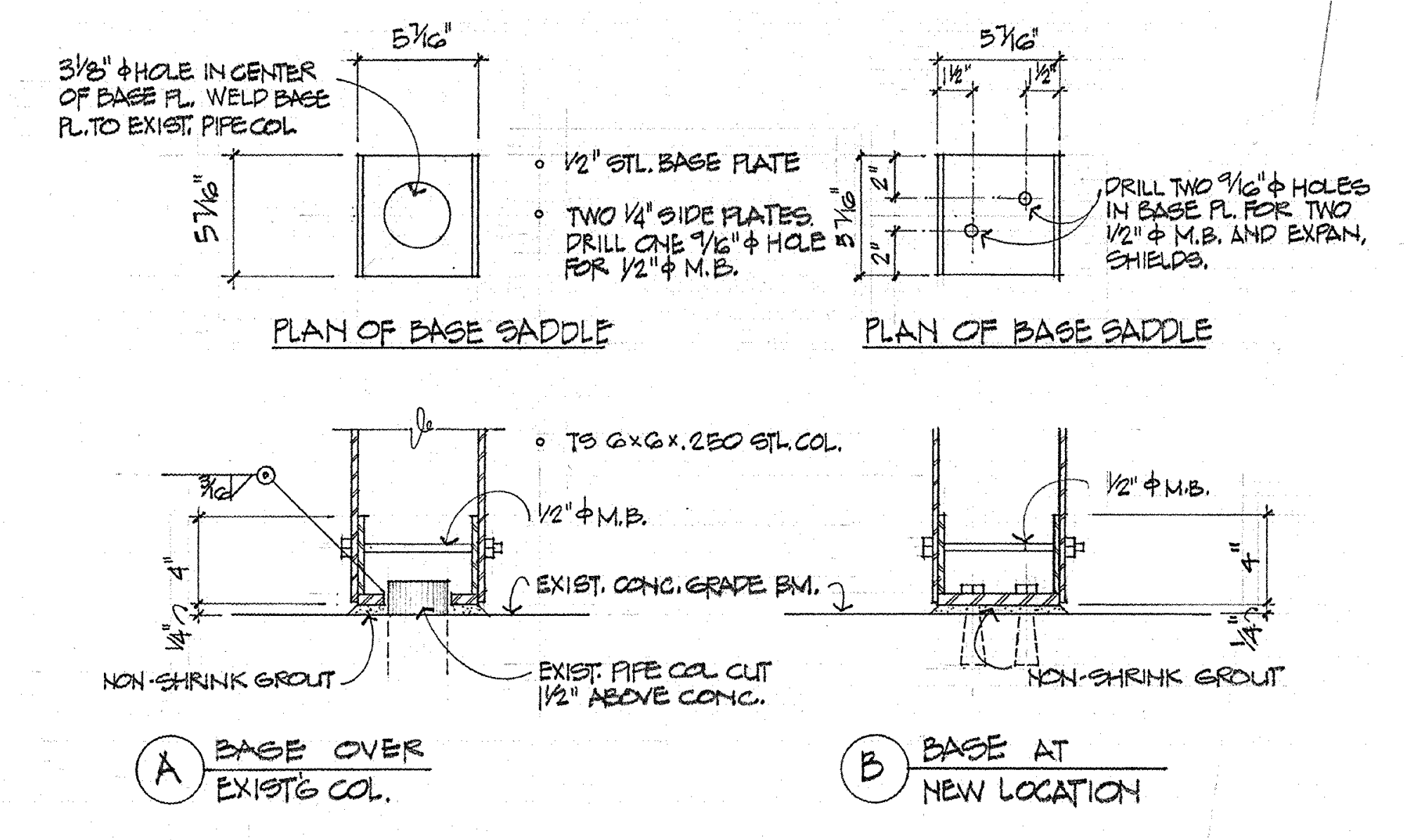
3 1/8"φ HOLE IN CENTER OF BASE PL. WELD BASE PL. TO EXIST. PIPE COL.
5 7/16"
• 1/2" STL. BASE PLATE
• TWO 1/4" SIDE PLATES. DRILL ONE 9/16"φ HOLE FOR 1/2"φ M.B.
1 1/2" 1 1/2"
2"
DRILL TWO 9/16"φ HOLES IN BASE PL. FOR TWO 1/2"φ M.B. AND EXPAN. SHIELDS.
PLAN OF BASE SADDLE
PLAN OF BASE SADDLE
• TS 6x6x.250 STL. COL.
3/16
1/2"φ M.B.
4"
1/4"
EXIST. CONC. GRADE BM.
NON-SHRINK GROUT
EXIST. PIPE COL CUT 1 1/2" ABOVE CONC.
A BASE OVER EXIST'G COL.
B BASE AT NEW LOCATION

14/3 ARCADE COLUMN BASE DETAIL
SECONDARY ARCADE 1 1/2"=1'-0"

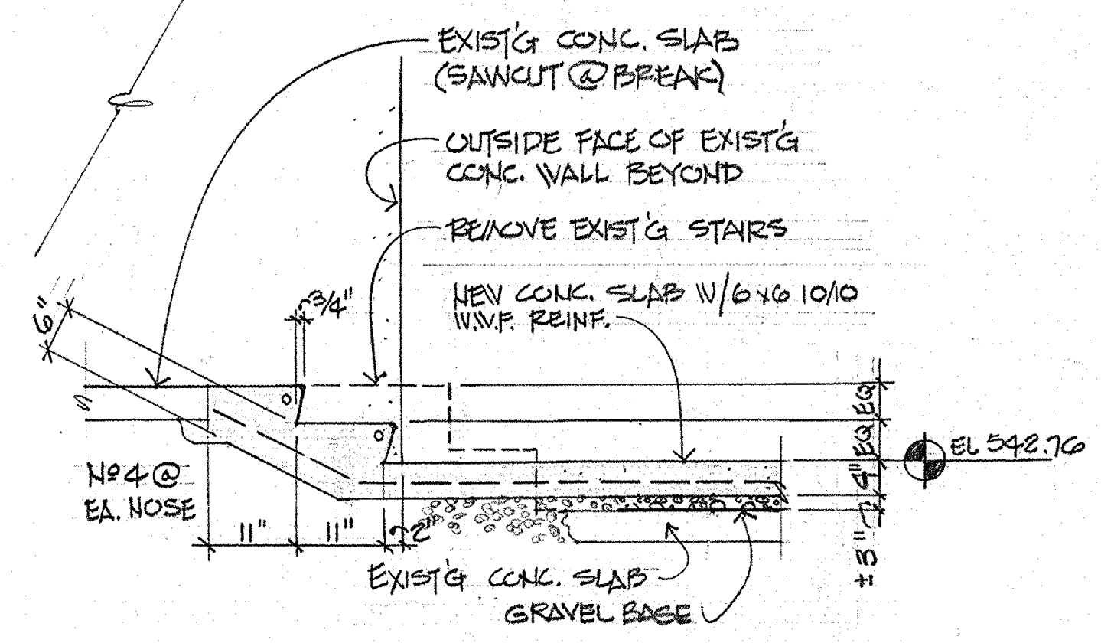
EXIST'G CONC. SLAB (SAWCUT @ BREAK)
OUTSIDE FACE OF EXIST'G CONC. WALL BEYOND
REMOVE EXIST'G STAIRS
NEW CONC. SLAB W/6x6 10/10 W.W.F. REINF.
6"
3/4"
No 4 @ EA. NOSE
11" 11" 2"
EQ. EQ.
4"
3" ±
EL 542.76
EXIST'G CONC. SLAB
GRAVEL BASE

13/3 STAIR MODIFICATIONS
@ AUDITORIUM 1/2"=1'-0"

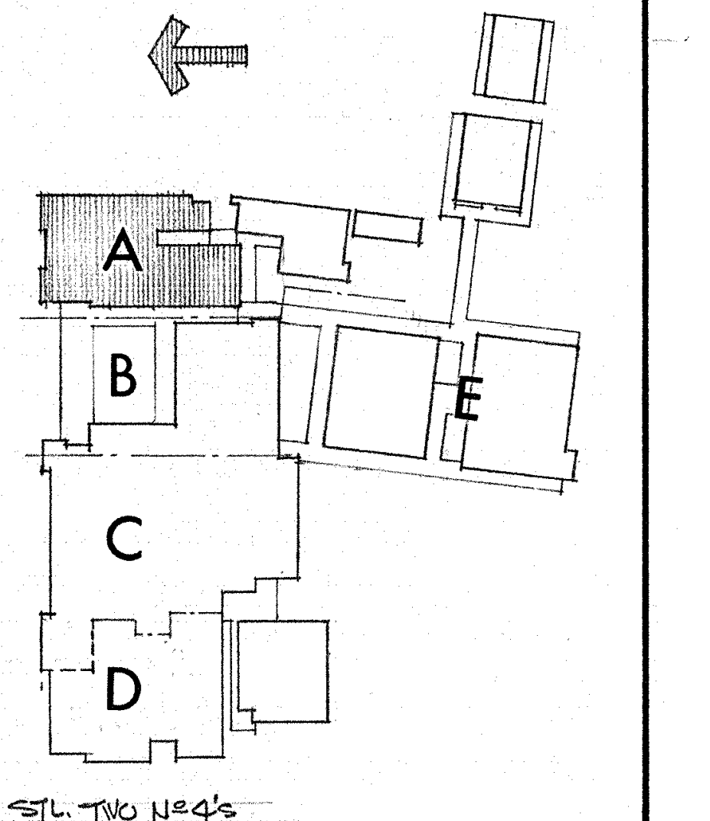

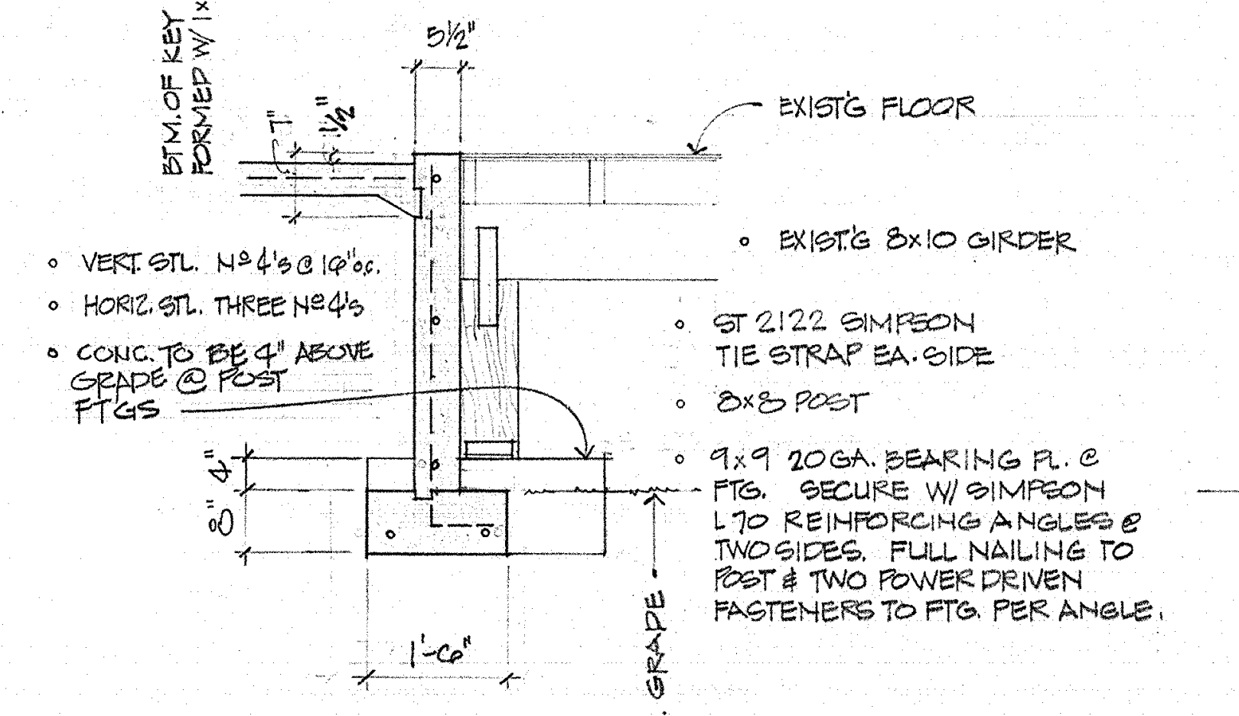
BTM. OF KEY FORMED W/ 1x4
5 1/2"
1"
1 1/2"
EXIST'G FLOOR
• VERT. STL. No 4's @ 16" o.c.
• HORIZ. STL. THREE No 4's
• CONC. TO BE 4" ABOVE GRADE @ POST FTGS
• EXIST'G 8x10 GIRDER
• ST 2122 SIMPSON TIE STRAP EA. SIDE
• 8x8 POST
• 9x9 20GA. BEARING PL. @ FTG. SECURE W/ SIMPSON L70 REINFORCING ANGLES @ TWO SIDES. FULL NAILING TO POST & TWO POWER DRIVEN FASTENERS TO FTG. PER ANGLE.
4"
8"
1'-6"
EXISTG. GRADE

1/3 WEST FNDTN
WALL 1/2"=1'-0"

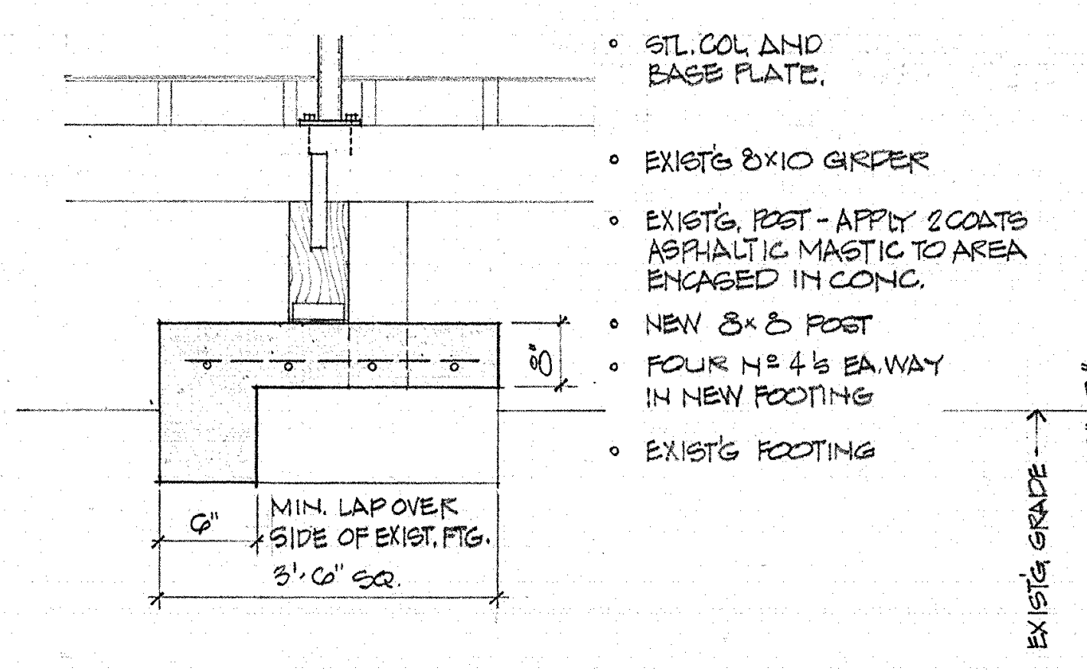
• STL. COL AND BASE PLATE.
• EXIST'G 8x10 GIRDER
• EXIST'G. POST - APPLY 2 COATS ASPHALTIC MASTIC TO AREA ENCASED IN CONC.
• NEW 8x8 POST
• FOUR No 4's EA. WAY IN NEW FOOTING
• EXIST'G FOOTING
8"
6"
MIN. LAP OVER SIDE OF EXIST. FTG.
3'-6" SQ.

2/3 NEW FOOTING OVER
EXISTING FOOTING 1/2"=1'-0"

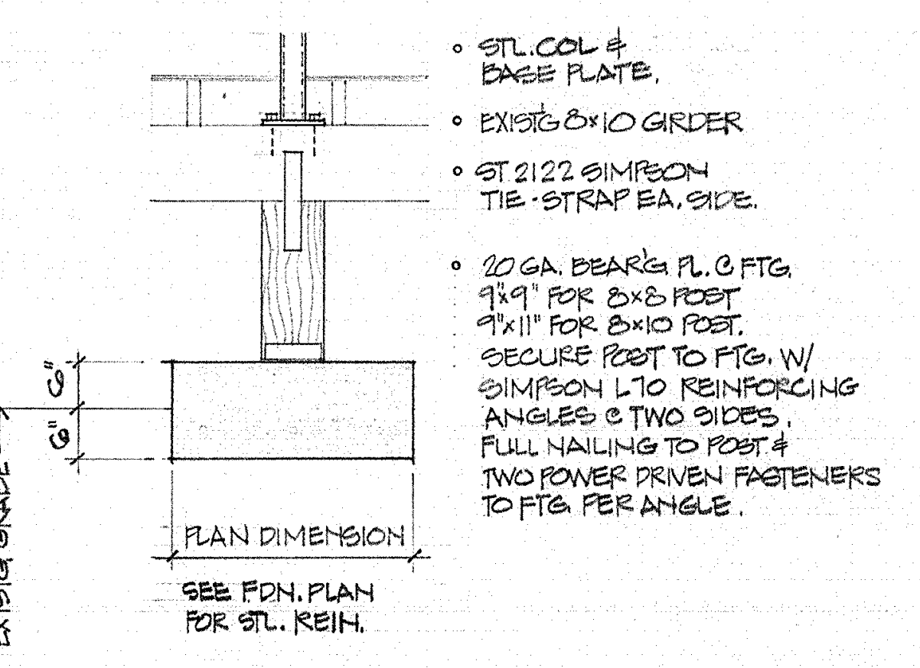
• STL. COL & BASE PLATE.
• EXIST'G 8x10 GIRDER
• ST 2122 SIMPSON TIE-STRAP EA. SIDE.
• 20 GA. BEAR'G PL. @ FTG. 9"x9" FOR 8x8 POST 9"x11" FOR 8x10 POST. SECURE POST TO FTG. W/ SIMPSON L70 REINFORCING ANGLES @ TWO SIDES. FULL NAILING TO POST & TWO POWER DRIVEN FASTENERS TO FTG. PER ANGLE.
6"
6"
EXISTG. GRADE
PLAN DIMENSION
SEE FDN. PLAN FOR STL. REIN.

3/3 TYPICAL WOOD POST
TO FOOTING DETAIL 1/2"=1'-0"

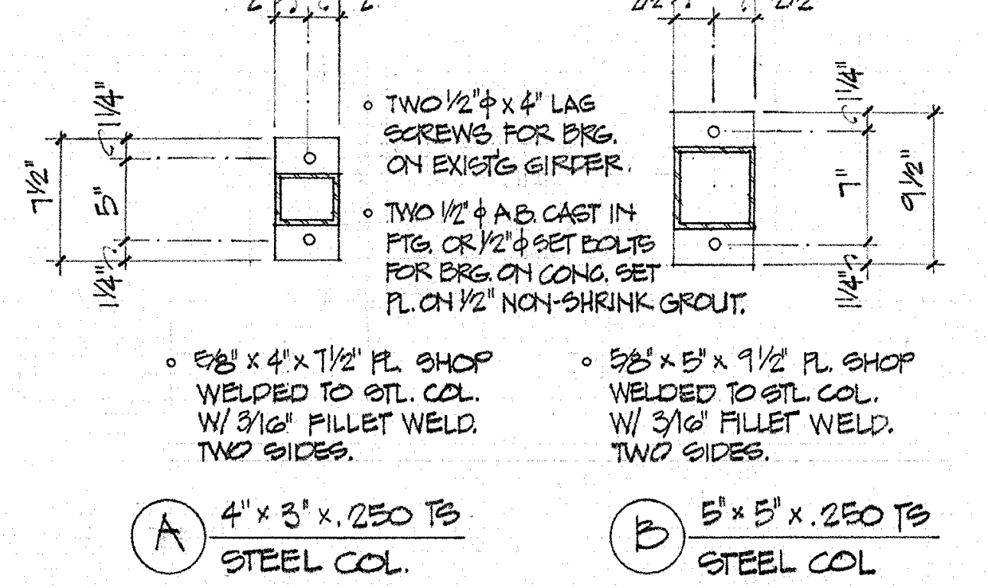
4"
2" 2"
1 1/4"
7 1/2"
5"
1 1/4"
• TWO 1/2"φx4" LAG SCREWS FOR BRG. ON EXISTG GIRDER.
• TWO 1/2"φ A.B. CAST IN FTG. OR 1/2"φ SET BOLTS FOR BRG. ON CONC. SET PL. ON 1/2" NON-SHRINK GROUT.
5"
2 1/2" 2 1/2"
1 1/4"
7"
9 1/2"
1 1/4"
• 5/8"x4"x7 1/2" PL. SHOP WELDED TO STL. COL. W/ 3/16" FILLET WELD. TWO SIDES.
• 5/8"x5"x9 1/2" PL. SHOP WELDED TO STL. COL. W/ 3/16" FILLET WELD. TWO SIDES.

A 4"x3"x.250 TS
STEEL COL.

B 5"x5"x.250 TS
STEEL COL

4/3 STEEL COLUMN BASE PLATE
DETAILS 1"=1'-0"

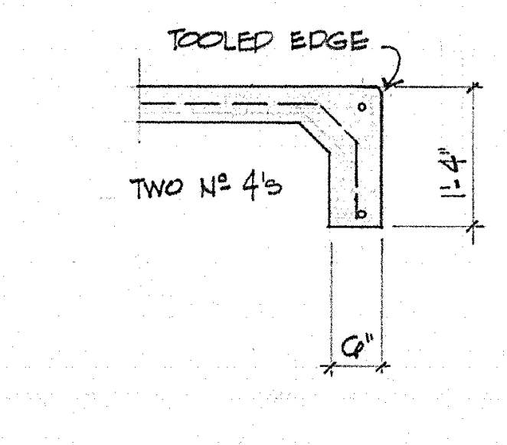
TOOLED EDGE
TWO No 4's
1'-4"
6"

5/3 SLAB
EDGE 1/2"=1'-0"

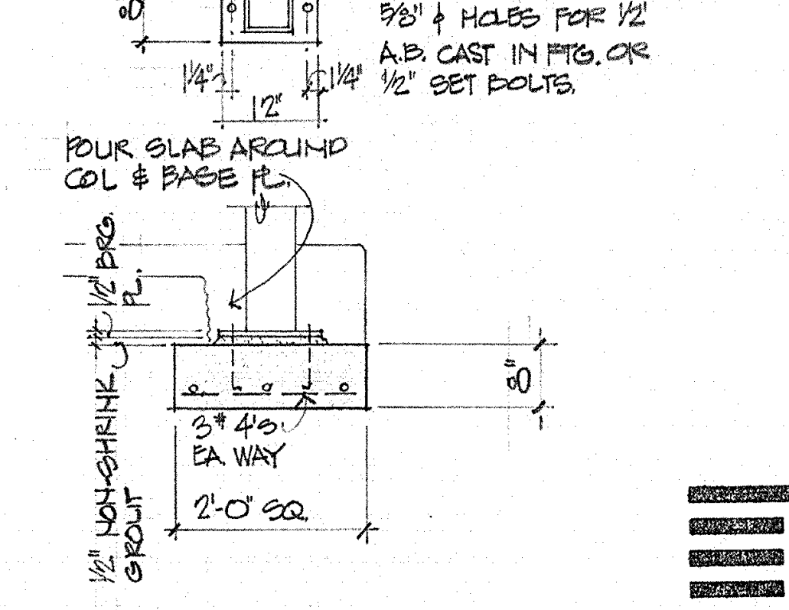
8"
1 1/4" 12" 1 1/4"
1/2"x8"x12" BRG PL. SHOP WELDED TO COL. TWO 5/8"φ HOLES FOR 1/2" A.B. CAST IN FTG. OR 1/2" SET BOLTS.
POUR SLAB AROUND COL & BASE PL.
1/2" BRG. PL.
1/2" NON-SHRINK GROUT
8"
3 #4's EA. WAY
2'-0" SQ.

6/3 ARCADE COL.
FTG. 1/2"=1'-0"

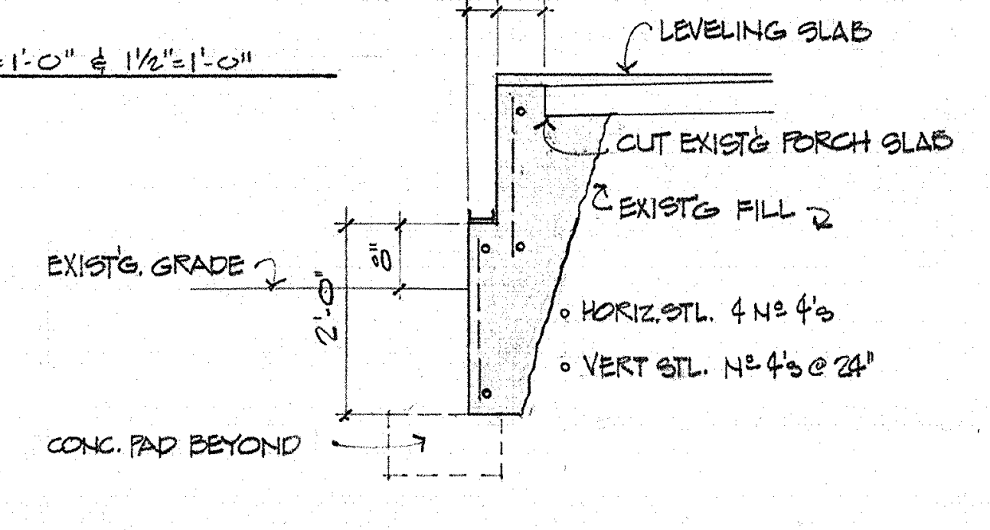
INSIDE FACE OF STL. STUDS
3 5/8" 6"
LEVELING SLAB
CUT EXIST'G PORCH SLAB
EXIST'G FILL
EXIST'G. GRADE
8"
2'-0"
• HORIZ. STL. 4 No 4's
• VERT STL. No 4's @ 24"
CONC. PAD BEYOND

7/3 GRADE BEAM AT
EXIST'G PORCH SLAB 1/2"=1'-0"

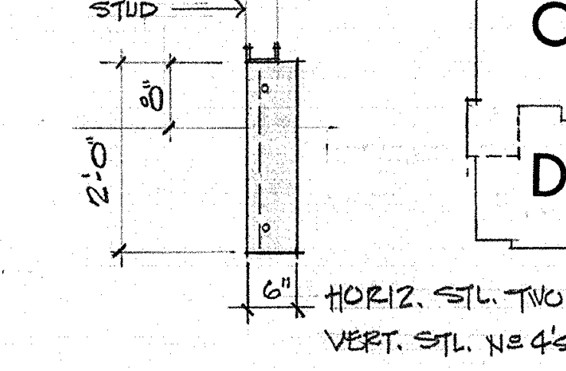
MTL STUD
3 5/8"
8"
2'-0"
6"
HORIZ. STL. TWO No 4's
VERT. STL. No 4's @ 24"

8/3 GRADE BEAM 1/2"=1'-0"

FOUNDATION PLAN & DETAILS - SECTOR A

SWEET HOME HIGH SCHOOL
ADDITIONS AND ALTERATIONS 1974
DISTRICT 55 LINN COUNTY, OREGON

ARCHITECTS
HAMLIN, MARTIN,
SCHULTZ & GEYER
AIA
159 W. 12TH EUGENE, OREGON 97401

A
3
JOB NO.

CLARE K. HAMLIN
Clare K. Hamlin
EUGENE, OREGON

EXISTING WINDOW INFILL:

EXTERIOR - FRAME IN W/ 2x4 STUDS 16"o.c. HELD BACK 7/8" FROM CONCRETE SURFACE. FINISH W/ 7/8" STUCCO ON STUCCO MESH SCORING TO MATCH EXIST. PATTERN. (SEE EXTERIOR ELEVATIONS.)

INTERIOR - FRAME IN W/ 2x4 STUDS 16"o.c. FLUSH W/ FACE OF EXIST. MULLION. FINISH W/ HD.CT. PLASTER ON 1/2" PLAS. BASE OVER ENTIRE WALL SURFACE IN ROOMS A4, A6, A8, & A14.

FOR INT. INFILL IN ROOMS A9, A10, & A11 SEE DTL. 8/6

PRACTICE RM
OFFICE
BAND RM
INSTRUMENT STORAGE
STORAGE
BOILER RM
LAUNDRY
CORRIDOR
BOYS
GIRLS
JAN. RM.
MECH. CHASE
FOYER
COAT RM.
TICKET OFF.
AUDITORIUM
STAGE
CHORAL
EXISTING WOOD SHOP BUILDING
EXIST'G CONC. SLAB
NEW 4" CONC. SLAB
EXIST'G ASPHALT
EXIST'G CONC. SIDEWALK
PLANTING AREA
END OF AISLE
4' WIDE CARPET STRIP CENTERED IN AISLE
NOTE: MEMORIAL PLAQUE TO BE RE LOCATED - VERIFY LOCATION.
RECESSED OPENING
17'-0"
24'-0"

FLOOR PLAN
SECTOR A

1/8"=1'-0"

UNLESS OTHERWISE NOTED, ALL DIMENSIONS SHOWN TO EXISTING WALLS WILL BE TO FINISH SURFACE OF DESCRIBED WALL.

N

LEGEND

═	EXIST'G WALL TO REMAIN
▨	NEW WOOD STUD WALL
▥	NEW METAL STUD WALL
▧	NEW NON-BEARING MASONRY WALL
▩	NEW BEARING MASONRY WALL
═	NEW CONCRETE WALL

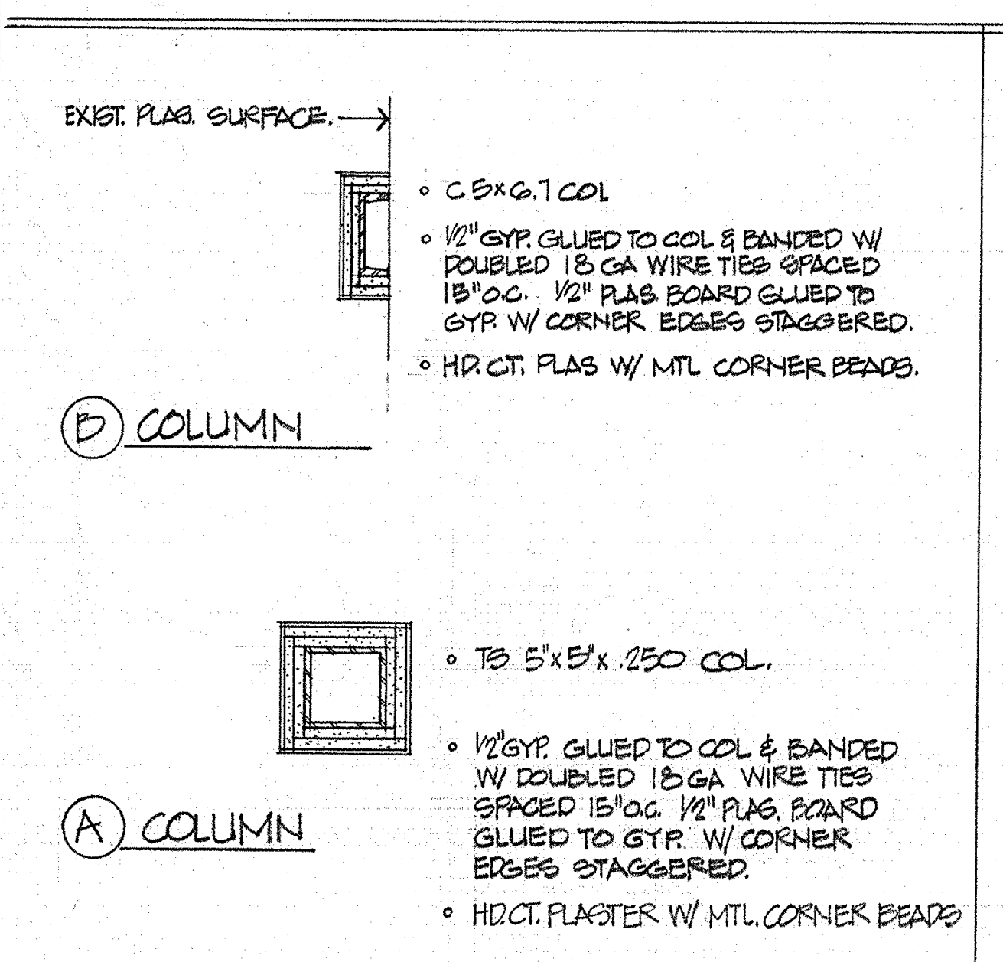
EXIST. PLAS. SURFACE.
B COLUMN
A COLUMN

B COLUMN
- C 5x6.7 COL
- 1/2" GYP. GLUED TO COL & BANDED W/ DOUBLED 18 GA WIRE TIES SPACED 18"o.c. 1/2" PLAS. BOARD GLUED TO GYP. W/ CORNER EDGES STAGGERED.
- HD.CT. PLAS W/ MTL CORNER BEADS.

A COLUMN
- TS 5"x5"x.250 COL.
- 1/2" GYP. GLUED TO COL & BANDED W/ DOUBLED 18 GA WIRE TIES SPACED 15"o.c. 1/2" PLAS. BOARD GLUED TO GYP. W/ CORNER EDGES STAGGERED.
- HD.CT. PLASTER W/ MTL. CORNER BEADS

1/4 COLUMN DETAIL
1"=1'-0"

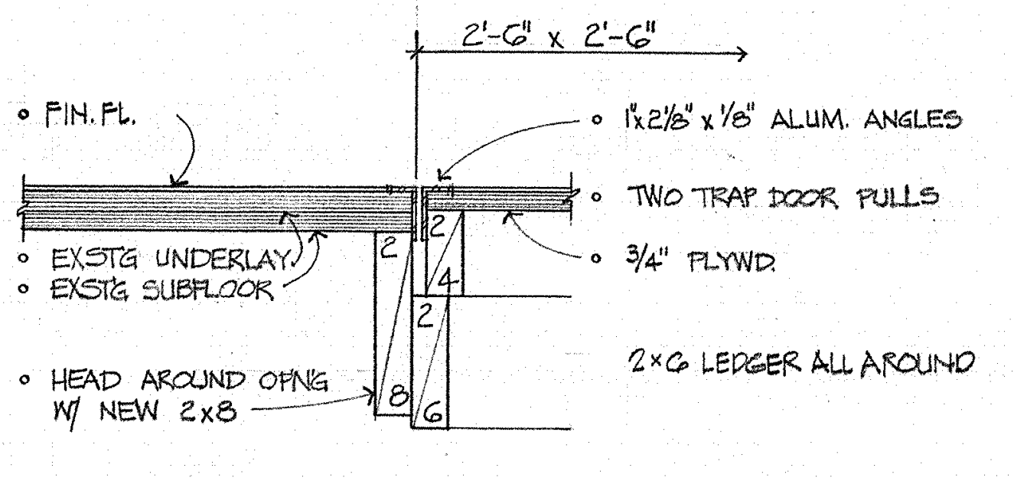
2'-6" x 2'-6"
FIN. FL.
EXSTG UNDERLAY.
EXSTG SUBFLOOR
HEAD AROUND OPNG W/ NEW 2x8
1"x2 1/8"x1/8" ALUM. ANGLES
TWO TRAP DOOR PULLS
3/4" PLYWD.
2x6 LEDGER ALL AROUND

2/4 FLOOR ACCESS
JAN. RM. A5
1 1/2"=1'-0"

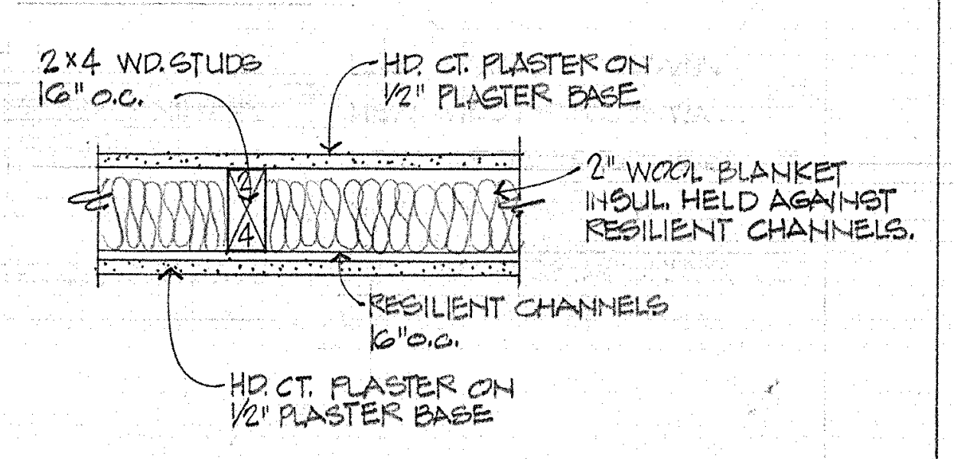
2x4 WD. STUDS 16" o.c.
HD. CT. PLASTER ON 1/2" PLASTER BASE
2" WOOL BLANKET INSUL. HELD AGAINST RESILIENT CHANNELS.
RESILIENT CHANNELS 16" o.c.
HD. CT. PLASTER ON 1/2" PLASTER BASE

3/4 SOUND CONTROL
PARTITION
1 1/2"=1'-0"

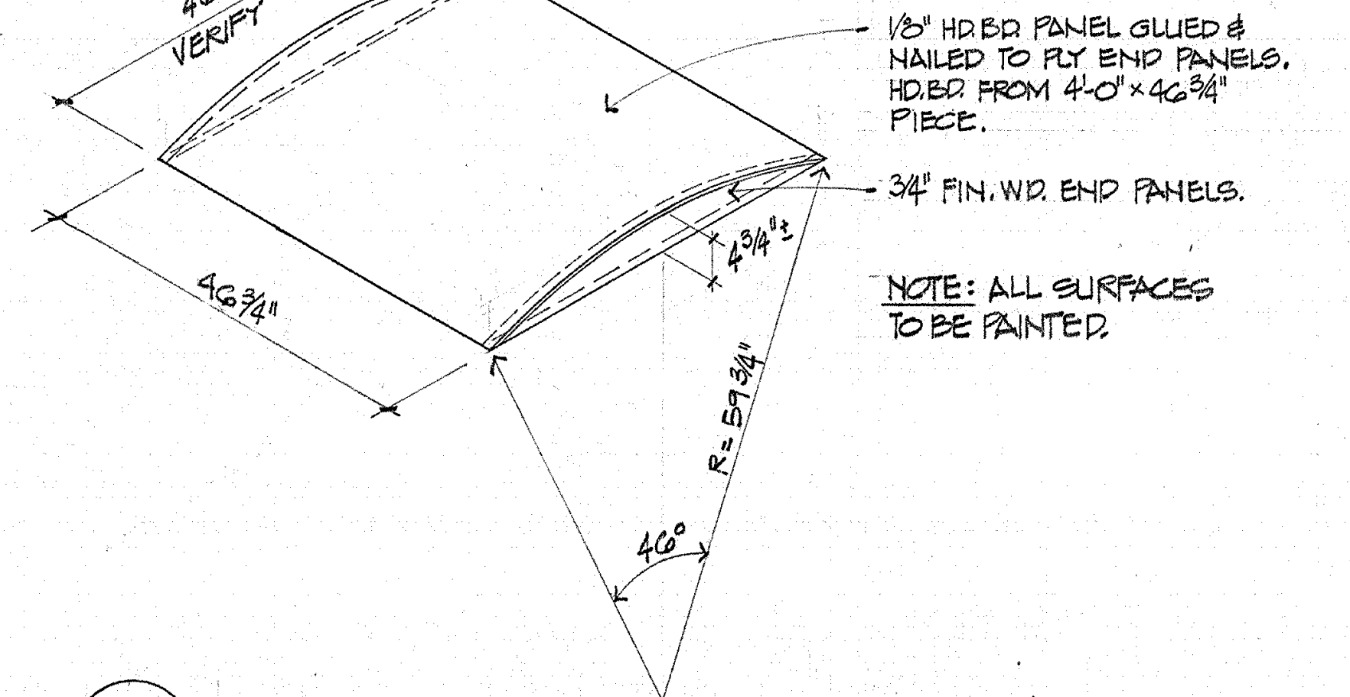
46 3/4"± VERIFY
46 3/4"
4 3/4"±
R= 59 3/4"
46°
1/8" HD.BD. PANEL GLUED & NAILED TO PLY END PANELS. HD.BD. FROM 4'-0"x46 3/4" PIECE.
3/4" FIN. WD. END PANELS.

NOTE: ALL SURFACES TO BE PAINTED.

4/4 ACOUSTIC BAFFLE IN BAND ROOM
32 REQUIRED.
1/2"=1'-0"

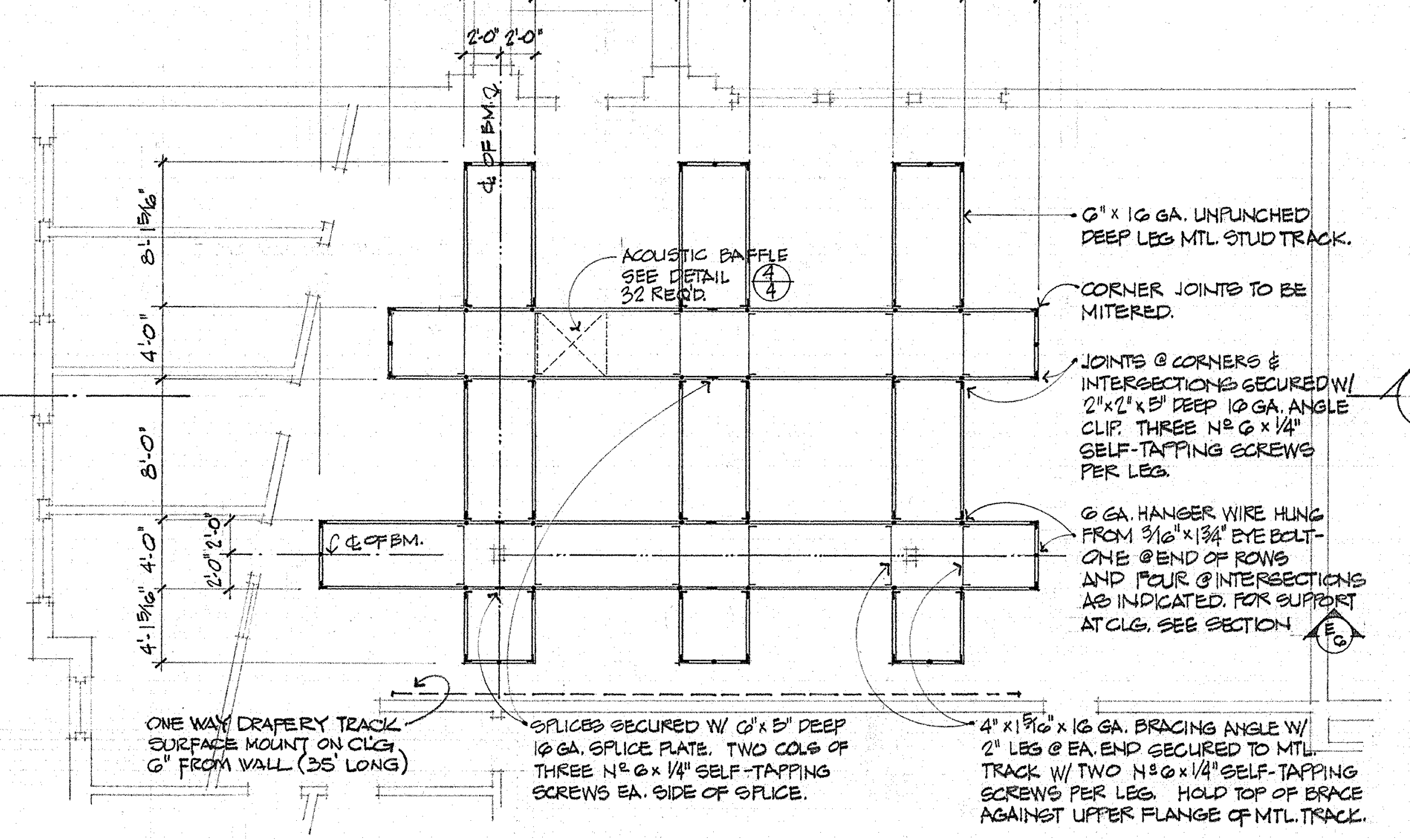
8'-1 5/16"
4'-1 5/16"
4'-0"
8'-0"
4'-0"
8'-0"
4'-0"
4'-1 5/16"
2'-0" 2'-0"
℄ OF BM.
8'-1 5/16"
4'-0"
8'-0"
4'-0"
4'-1 5/16"
2'-0" 2'-0"
ACOUSTIC BAFFLE SEE DETAIL 4/4 32 REQ'D.
6" x 16 GA. UNPUNCHED DEEP LEG MTL. STUD TRACK.
CORNER JOINTS TO BE MITERED.
JOINTS @ CORNERS & INTERSECTIONS SECURED W/ 2"x2"x5" DEEP 16 GA. ANGLE CLIP. THREE Nº 6 x 1/4" SELF-TAPPING SCREWS PER LEG.
6 GA. HANGER WIRE HUNG FROM 3/16"x1 3/4" EYE BOLT - ONE @ END OF ROWS AND FOUR @ INTERSECTIONS AS INDICATED. FOR SUPPORT AT CLG. SEE SECTION E/6
ONE WAY DRAPERY TRACK SURFACE MOUNT ON CLG 6" FROM WALL (35' LONG)
SPLICES SECURED W/ 6"x5" DEEP 16 GA. SPLICE PLATE. TWO COLS OF THREE Nº 6 x 1/4" SELF-TAPPING SCREWS EA. SIDE OF SPLICE.
4"x1 5/16"x16 GA. BRACING ANGLE W/ 2" LEG @ EA. END SECURED TO MTL. TRACK W/ TWO Nº 6 x 1/4" SELF-TAPPING SCREWS PER LEG. HOLD TOP OF BRACE AGAINST UPPER FLANGE OF MTL. TRACK.

BAND RM. SUSPENDED CEILING PLAN
1/8"=1'-0"

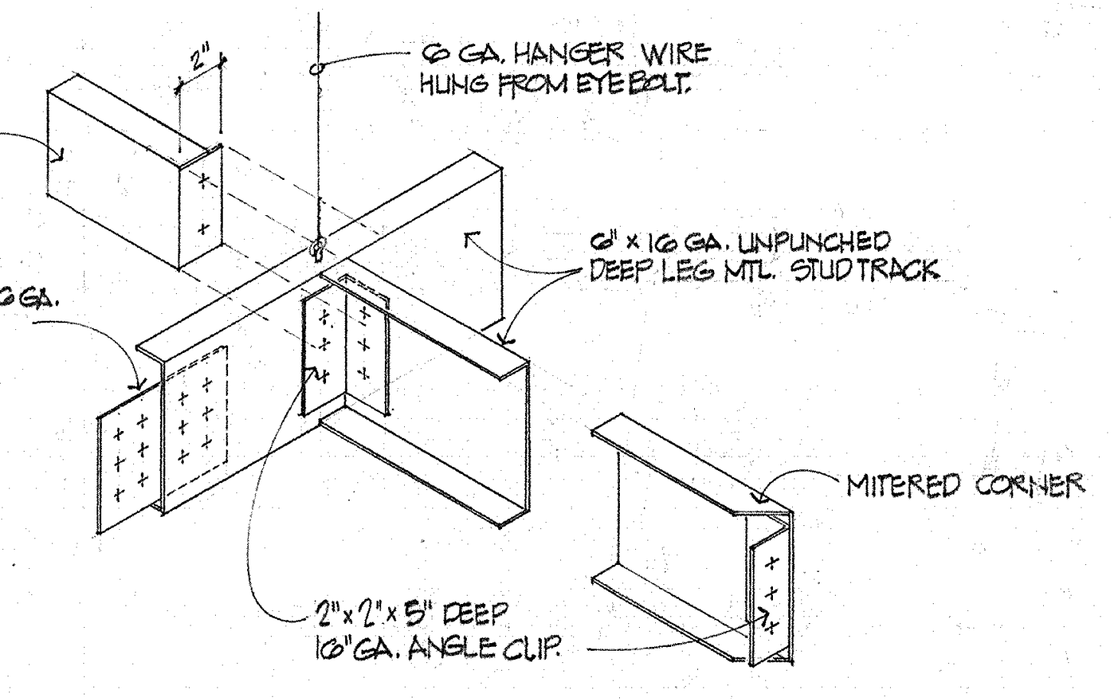
2"
6 GA. HANGER WIRE HUNG FROM EYE BOLT.
4"x1 5/16"x16 GA. BRACING ANGLE
6" x 16 GA. UNPUNCHED DEEP LEG MTL. STUD TRACK
6" x 5" DEEP 16 GA. SPLICE PLATE
MITERED CORNER
2"x2"x5" DEEP 16"GA. ANGLE CLIP.

ISOMETRIC
SUSPENDED BANDROOM CEILING
1 1/2"=1'-0"

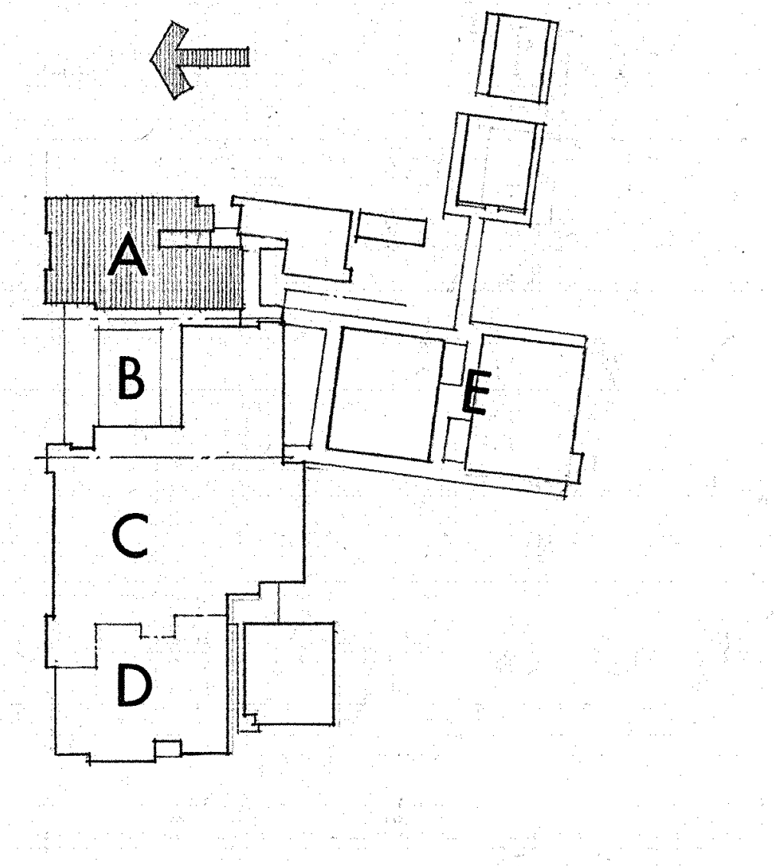

FLOOR PLAN - SECTOR A

SWEET HOME HIGH SCHOOL
ADDITIONS AND ALTERATIONS 1974
DISTRICT 55 LINN COUNTY, OREGON

ARCHITECTS AIA
HAMLIN, MARTIN,
SCHULTZ & GEYER
159 W. 12TH EUGENE, OREGON 97401

A
4
JOB NO.

REGISTERED ARCHITECT
CLARE K. HAMLIN
Clare K Hamlin
EUGENE, OREGON
STATE OF OREGON

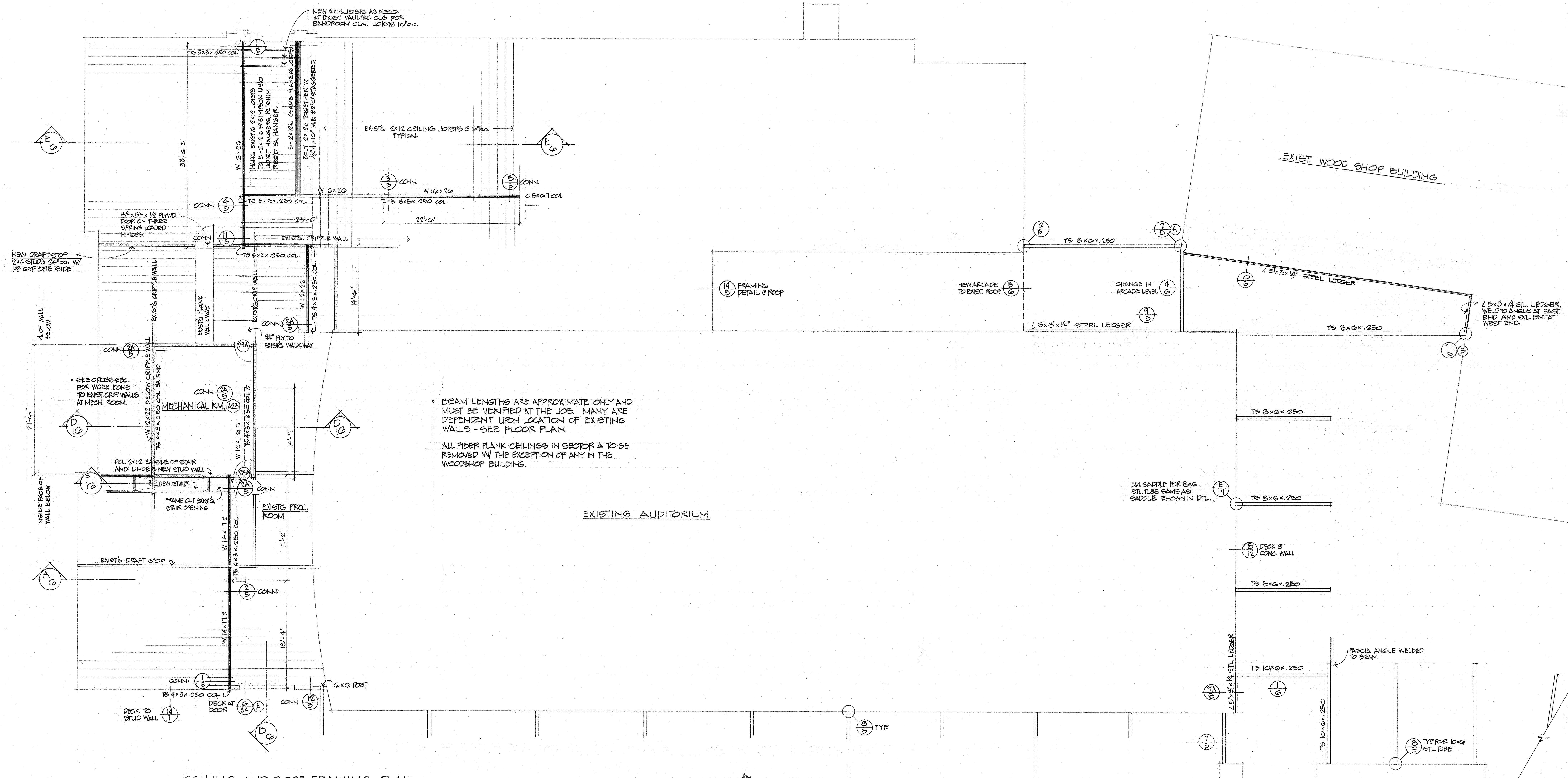
NEW 2x12 JOISTS AS REQ'D. AT EXIST. VAULTED CLG. FOR BANDROOM CLG. JOISTS 16" o.c.
EXIST'G 2x12 CEILING JOISTS @ 16" o.c. TYPICAL
W16x26
CONN.
C 5x6.7 COL.
TS 5x5x.250 COL.
EXIST'G CRIPPLE WALL
NEW DRAFTSTOP 2x4 STUDS 24" o.c. W/ 1/2" GYP ONE SIDE
MECHANICAL RM.
EXIST'G PROJ. ROOM
EXIST'G DRAFT STOP
DECK TO STUD WALL
DECK AT DOOR
6x6 POST
FRAMING DETAIL @ ROOF
EXIST. WOOD SHOP BUILDING
TS 8x6x.250
NEW ARCADE TO EXIST. ROOF
CHANGE IN ARCADE LEVEL
L 5x3x1/4" STEEL LEDGER
L 5x3x1/4" STL. LEDGER, WELD TO ANGLE AT EAST END AND STL. BM. AT WEST END.
• BEAM LENGTHS ARE APPROXIMATE ONLY AND MUST BE VERIFIED AT THE JOB. MANY ARE DEPENDENT UPON LOCATION OF EXISTING WALLS - SEE FLOOR PLAN.
ALL FIBER PLANK CEILINGS IN SECTOR A TO BE REMOVED W/ THE EXCEPTION OF ANY IN THE WOODSHOP BUILDING.
EXISTING AUDITORIUM
BM. SADDLE FOR 8x6 STL. TUBE SAME AS SADDLE SHOWN IN DTL.
DECK @ CONC. WALL
TS 10x6x.250
FASCIA ANGLE WELDED TO BEAM
TYP. FOR LONG STL. TUBE
FOR CONTINUATION OF ARCADE SEE ROOF FRAMING PLAN - SECTOR E SHT 25
TYP.
N

CEILING AND ROOF FRAMING PLAN
SECTOR A 1/8"=1'-0"

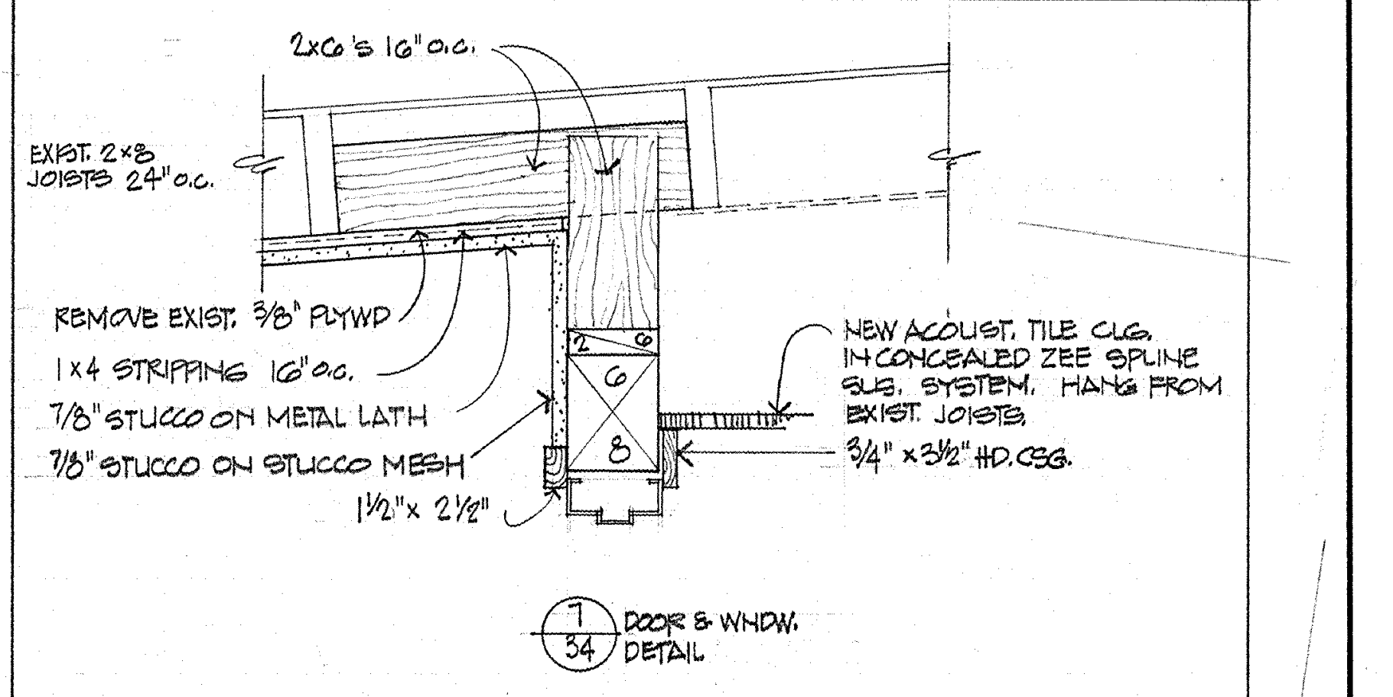
2x6's 16" o.c.
EXIST. 2x8 JOISTS 24" o.c.
REMOVE EXIST. 3/8" PLYWD.
1x4 STRIPPING 16" o.c.
7/8" STUCCO ON METAL LATH
7/8" STUCCO ON STUCCO MESH
1 1/2" x 2 1/2"
NEW ACOUST. TILE CLG. IN CONCEALED ZEE SPLINE SUS. SYSTEM. HANG FROM EXIST. JOISTS
3/4" x 3 1/2" HD. CSG.
DOOR & WINDW. DETAIL

14/5 FRAMING DETAIL 1"=1'-0"

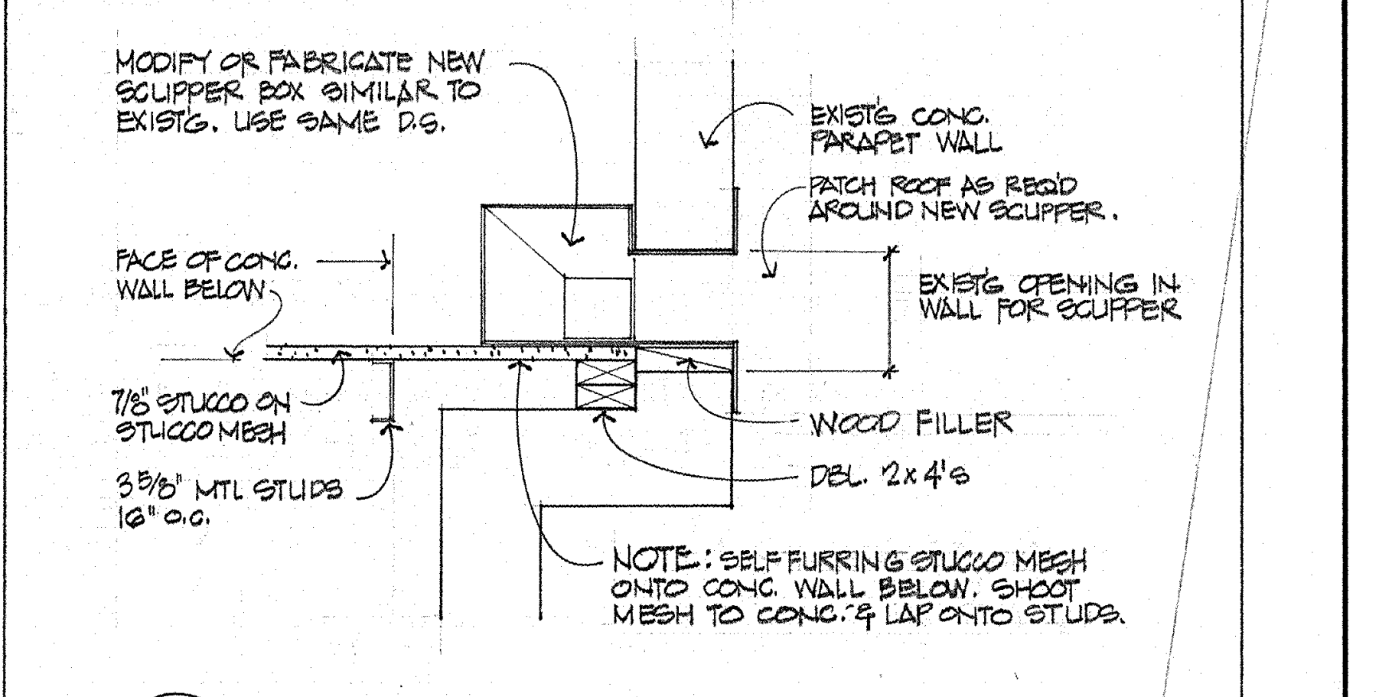
MODIFY OR FABRICATE NEW SCUPPER BOX SIMILAR TO EXIST'G. USE SAME D.S.
EXIST'G CONC. PARAPET WALL
PATCH ROOF AS REQ'D AROUND NEW SCUPPER.
FACE OF CONC. WALL BELOW
EXIST'G OPENING IN WALL FOR SCUPPER
7/8 STUCCO ON STUCCO MESH
WOOD FILLER
DBL. 2x4's
3 5/8" MTL. STUDS 16" o.c.
NOTE: SELF FURRING STUCCO MESH ONTO CONC. WALL BELOW. SHOOT MESH TO CONC. & LAP ONTO STUDS.

13/5 PLAN DETAIL AT EXISTING D.S. 1"=1'-0"

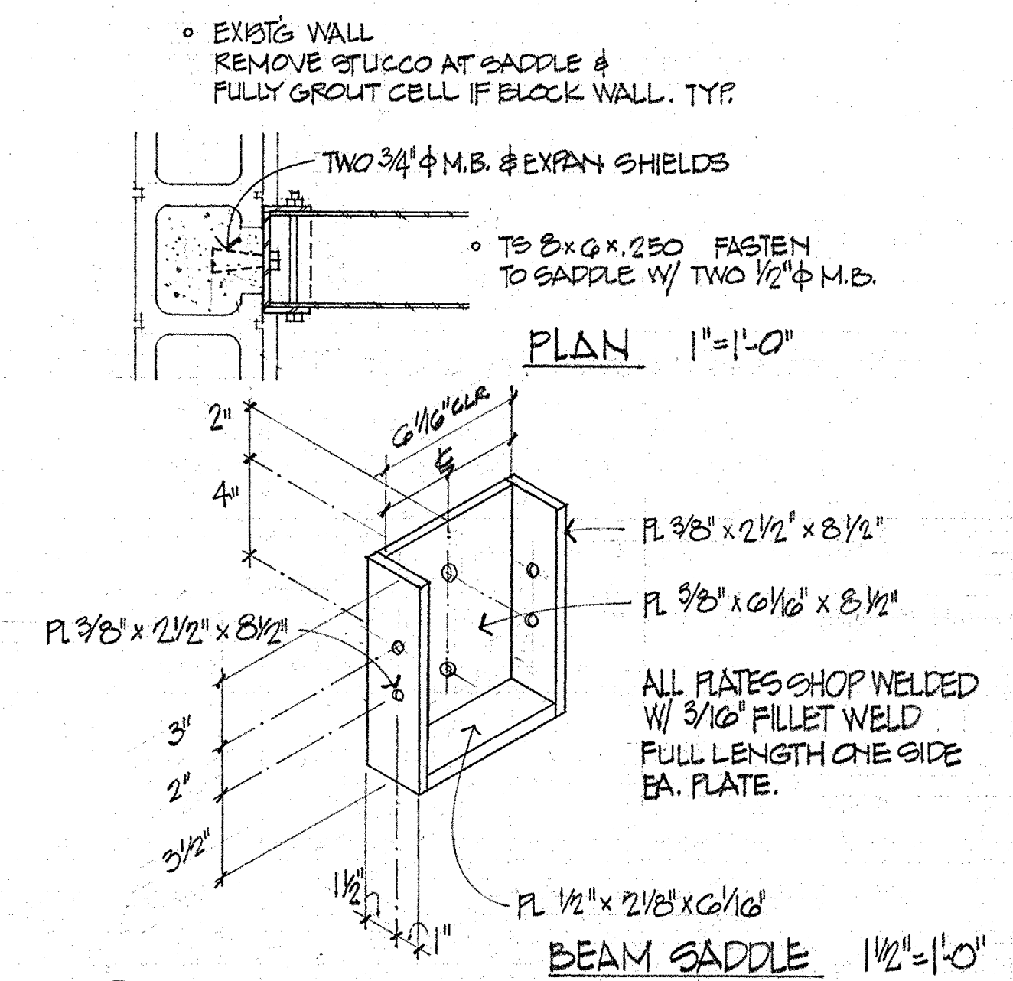
• EXIST'G WALL REMOVE STUCCO AT SADDLE & FULLY GROUT CELL IF BLOCK WALL. TYP.
TWO 3/4"φ M.B. & EXPAN. SHIELDS
• TS 8x6x.250 FASTEN TO SADDLE W/ TWO 1/2"φ M.B.
PLAN 1"=1'-0"
PL 3/8" x 2 1/2" x 8 1/2"
PL 3/8" x 6 1/2" x 8 1/2"
ALL PLATES SHOP WELDED W/ 3/16" FILLET WELD FULL LENGTH ONE SIDE EA. PLATE.
PL 1/2" x 2 1/2" x 6 1/16"
BEAM SADDLE 1 1/2"=1'-0"

6/5 STEEL ARCADE BEAM TO WALL CONN.

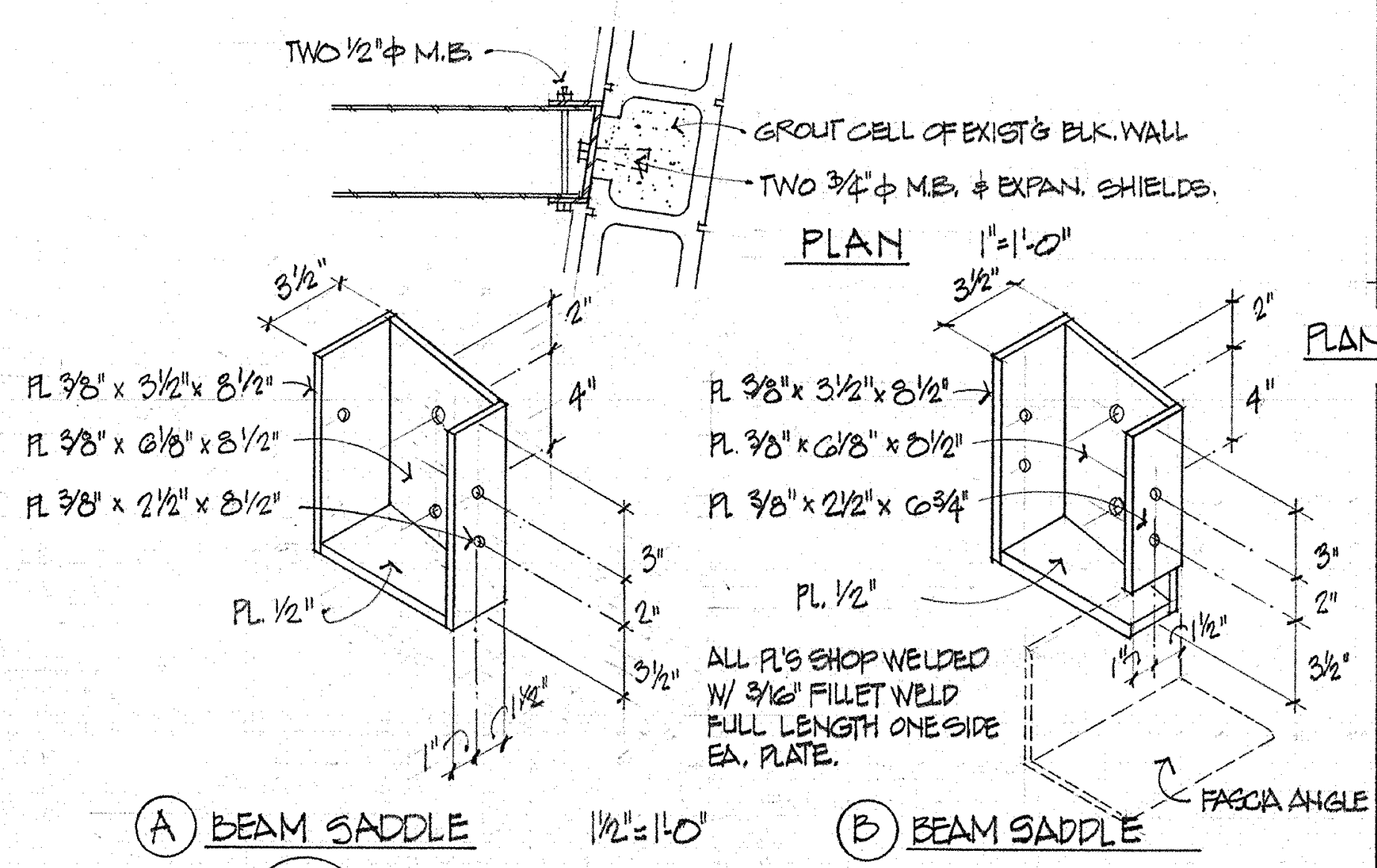
TWO 1/2"φ M.B.
GROUT CELL OF EXIST'G BLK. WALL
TWO 3/4"φ M.B. & EXPAN. SHIELDS
PLAN 1"=1'-0"
PL 3/8" x 5 1/2" x 8 1/2"
PL 3/8" x 6 1/2" x 8 1/2"
PL 3/8" x 2 1/2" x 8 1/2"
PL 1/2"
ALL PL'S SHOP WELDED W/ 3/16" FILLET WELD FULL LENGTH ONE SIDE EA. PLATE.
FASCIA ANGLE
(A) BEAM SADDLE 1 1/2"=1'-0"
(B) BEAM SADDLE

7/5 STEEL ARCADE BEAM TO WALL CONN.

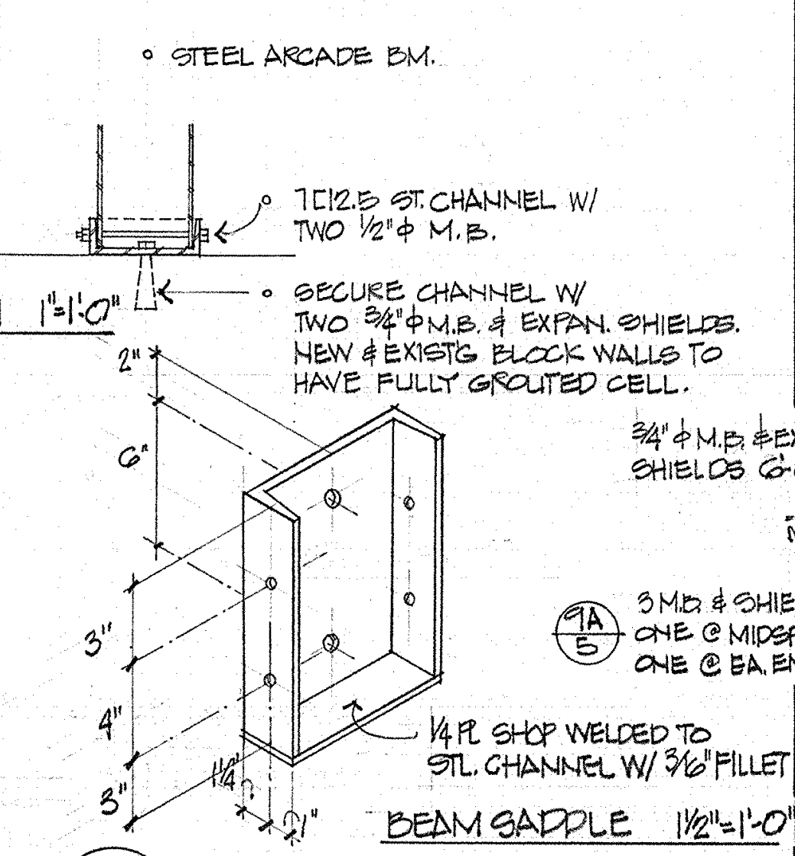
• STEEL ARCADE BM.
7C12.5 ST. CHANNEL W/ TWO 1/2"φ M.B.
PLAN 1"=1'-0"
• SECURE CHANNEL W/ TWO 3/4"φ M.B. & EXPAN. SHIELDS. NEW & EXIST'G. BLOCK WALLS TO HAVE FULLY GROUTED CELL.
1/4" PL. SHOP WELDED TO STL. CHANNEL W/ 3/16" FILLET
BEAM SADDLE 1 1/2"=1'-0"

8/5 STL. ARCADE BEAM TO EXIST'G WALL - TYP. CONN.

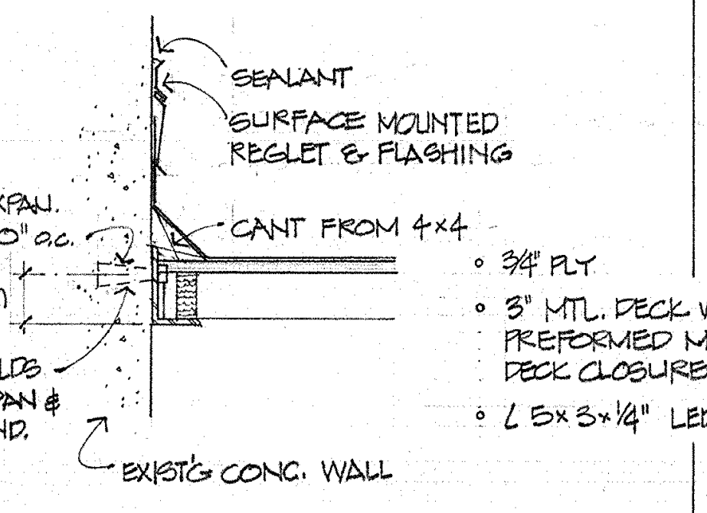
SEALANT
SURFACE MOUNTED REGLET & FLASHING
CANT FROM 4x4
3/4"φ M.B. & EXPAN. SHIELDS 6'-0" o.c.
3 M.B. & SHIELDS ONE @ MIDSPAN & ONE @ EA. END.
3/4" PLY
3" MTL. DECK W/ PREFORMED MTL. DECK CLOSURES.
L 5x3x1/4" LEDGER
EXIST'G CONC. WALL

9/5 ST. ARCADE LEDGER @ CONC. WALL 1"=1'-0"

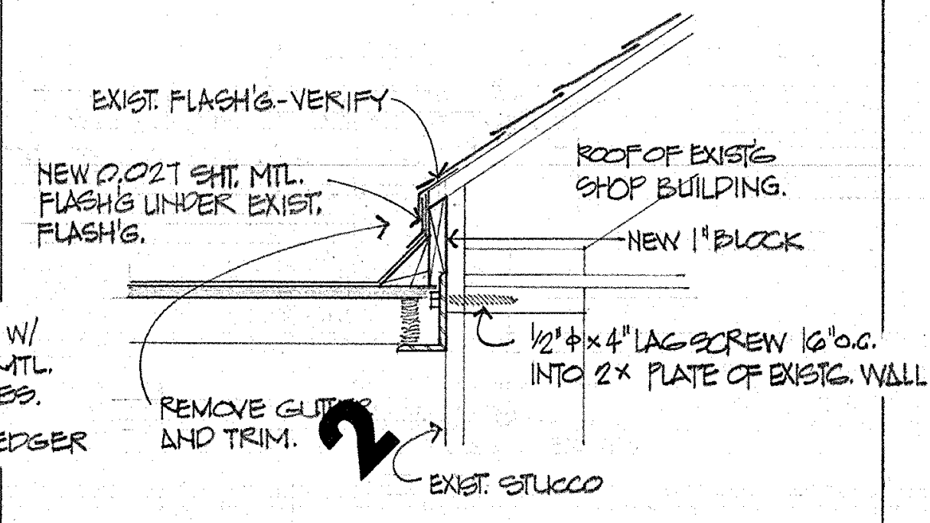
EXIST. FLASH'G - VERIFY
NEW 0.021 SHT. MTL. FLASH'G UNDER EXIST. FLASH'G.
ROOF OF EXIST'G SHOP BUILDING.
NEW 1" BLOCK
1/2"φ x 4" LAG SCREW 16" o.c. INTO 2x PLATE OF EXIST'G. WALL
REMOVE GUTTER AND TRIM.
EXIST. STUCCO

10/5 STEEL ARCADE LEDGER @ SHOP BUILDING 1"=1'-0"

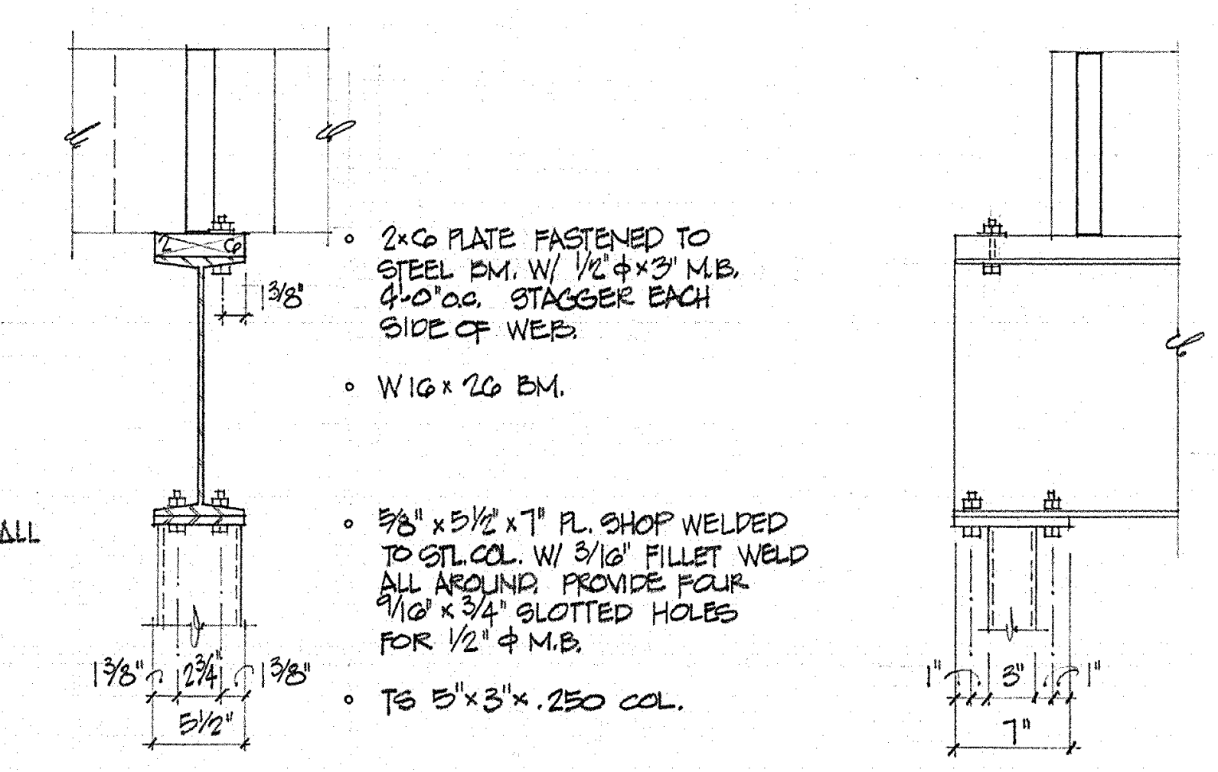
• 2x6 PLATE FASTENED TO STEEL BM. W/ 1/2"φ x 3" M.B. 4'-0" o.c. STAGGER EACH SIDE OF WEB.
• W16x26 BM.
• 5/8" x 5 1/2" x 7" PL. SHOP WELDED TO STL. COL. W/ 3/16" FILLET WELD ALL AROUND. PROVIDE FOUR 9/16" x 3/4" SLOTTED HOLES FOR 1/2"φ M.B.
• TS 5" x 3" x .250 COL.

11/5 BM. TO 5"x3" COL. CONNECTION 1"=1'-0"

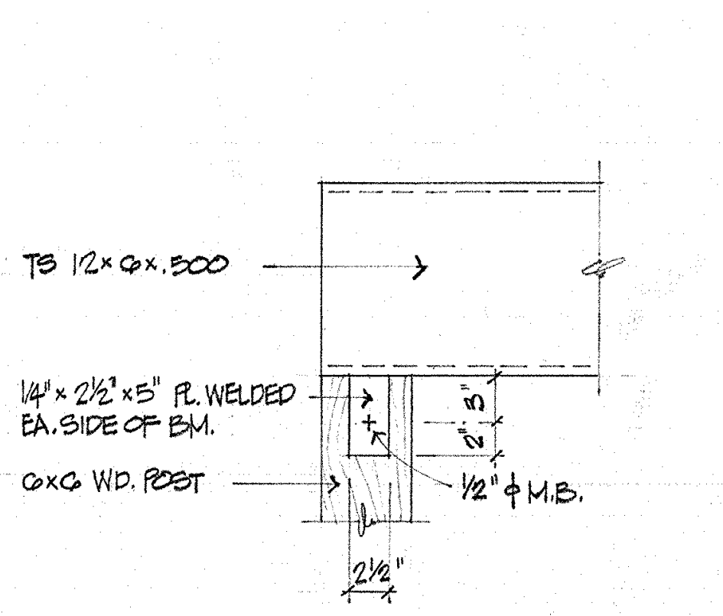
TS 12x6x.500
1/4" x 2 1/2" x 5" PL. WELDED EA. SIDE OF BM.
6x6 WD. POST
1/2"φ M.B.

12/5 WALL COL. FOR ARCADE BEAM 1"=1'-0"

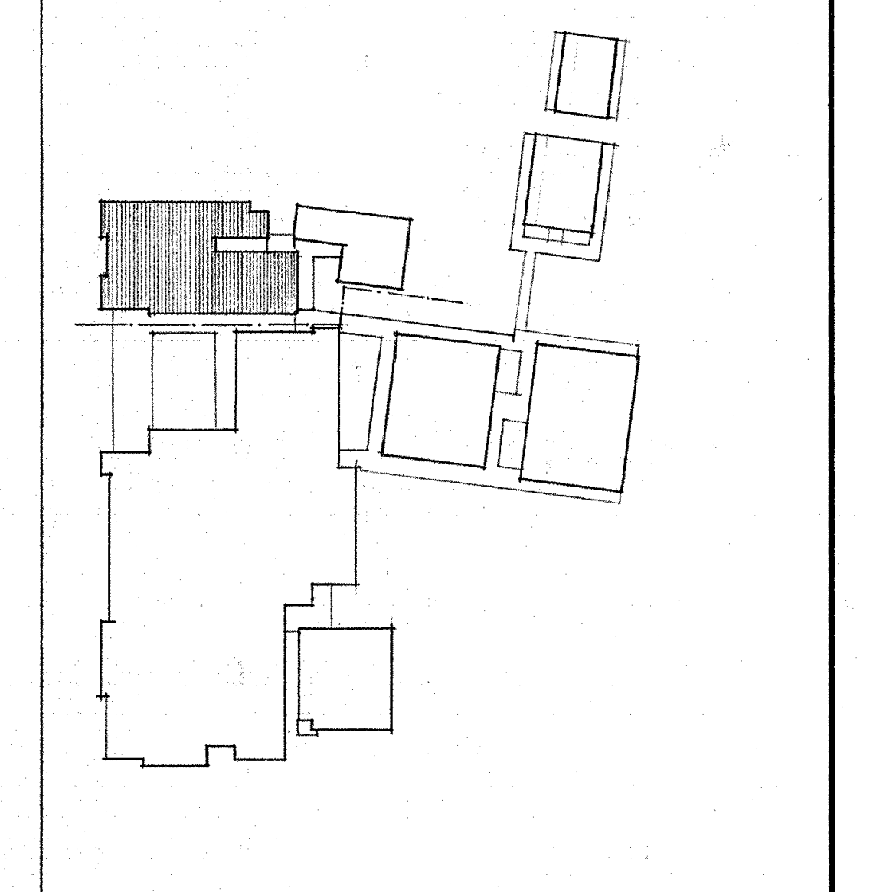

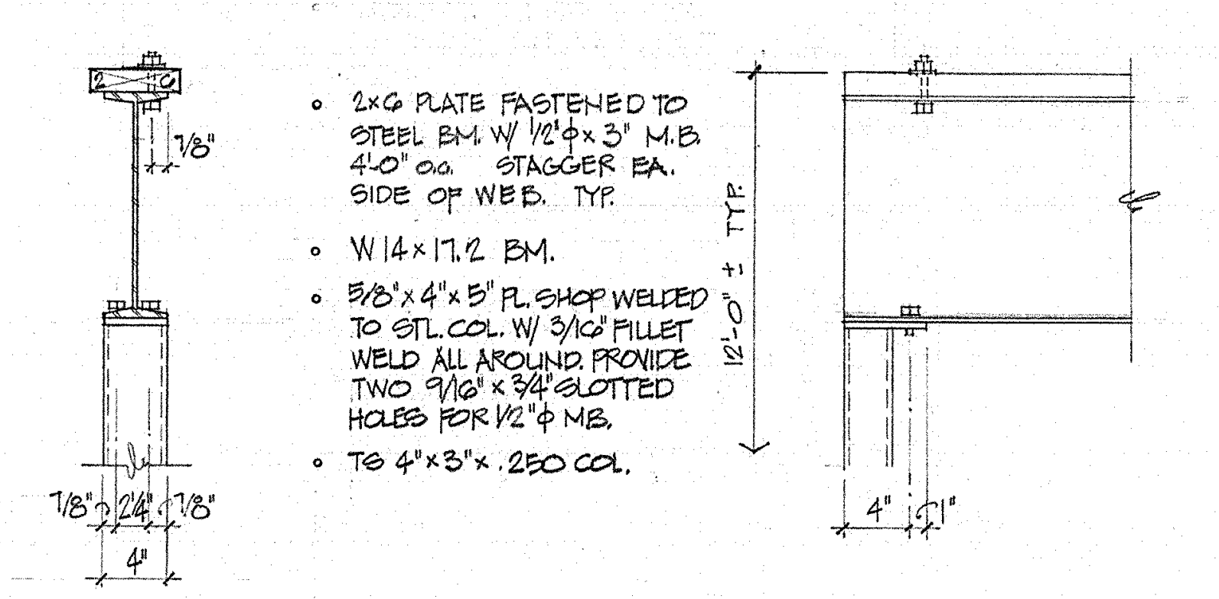
• 2x6 PLATE FASTENED TO STEEL BM. W/ 1/2"φ x 3" M.B. 4'-0" o.c. STAGGER EA. SIDE OF WEB. TYP.
• W14x17.2 BM.
• 5/8" x 4" x 5" PL. SHOP WELDED TO STL. COL. W/ 3/16" FILLET WELD ALL AROUND. PROVIDE TWO 9/16" x 3/4" SLOTTED HOLES FOR 1/2"φ M.B.
• TS 4" x 3" x .250 COL.

1/5 STEEL BEAM TO 4"x3" COL. CONNECTION 1"=1'-0"

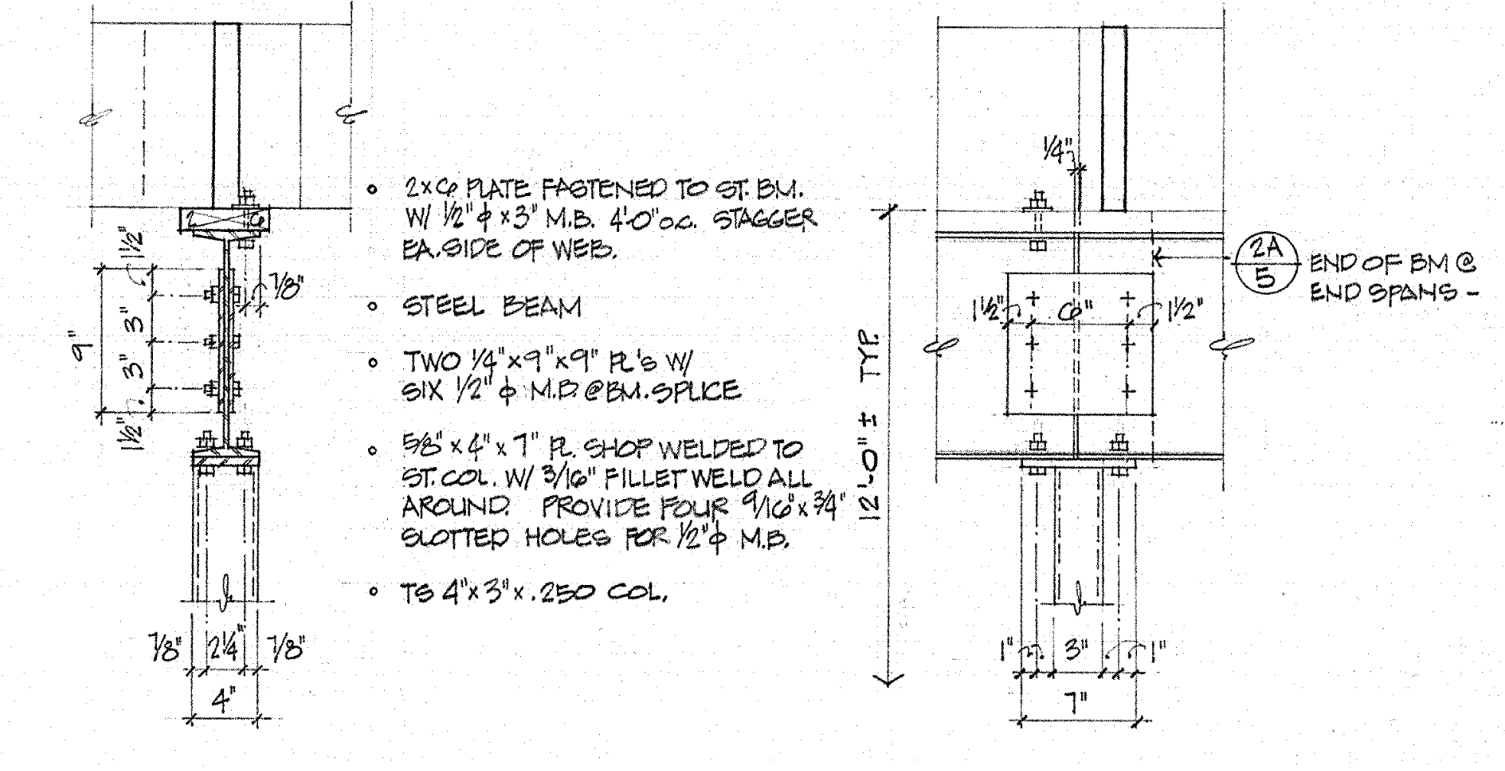
• 2x6 PLATE FASTENED TO ST. BM. W/ 1/2"φ x 3" M.B. 4'-0" o.c. STAGGER EA. SIDE OF WEB.
• STEEL BEAM
• TWO 1/4" x 9" x 9" PL'S W/ SIX 1/2"φ M.B. @ BM. SPLICE
• 5/8" x 4" x 7" PL. SHOP WELDED TO ST. COL. W/ 3/16" FILLET WELD ALL AROUND. PROVIDE FOUR 9/16" x 3/4" SLOTTED HOLES FOR 1/2"φ M.B.
• TS 4" x 3" x .250 COL.
END OF BM. @ END SPANS

2/5 STEEL BM. TO 4"x3" COL. CONNECTION 1"=1'-0"
BM. MAY BE CONTINUOUS AT CONTRACTOR'S OPTION.

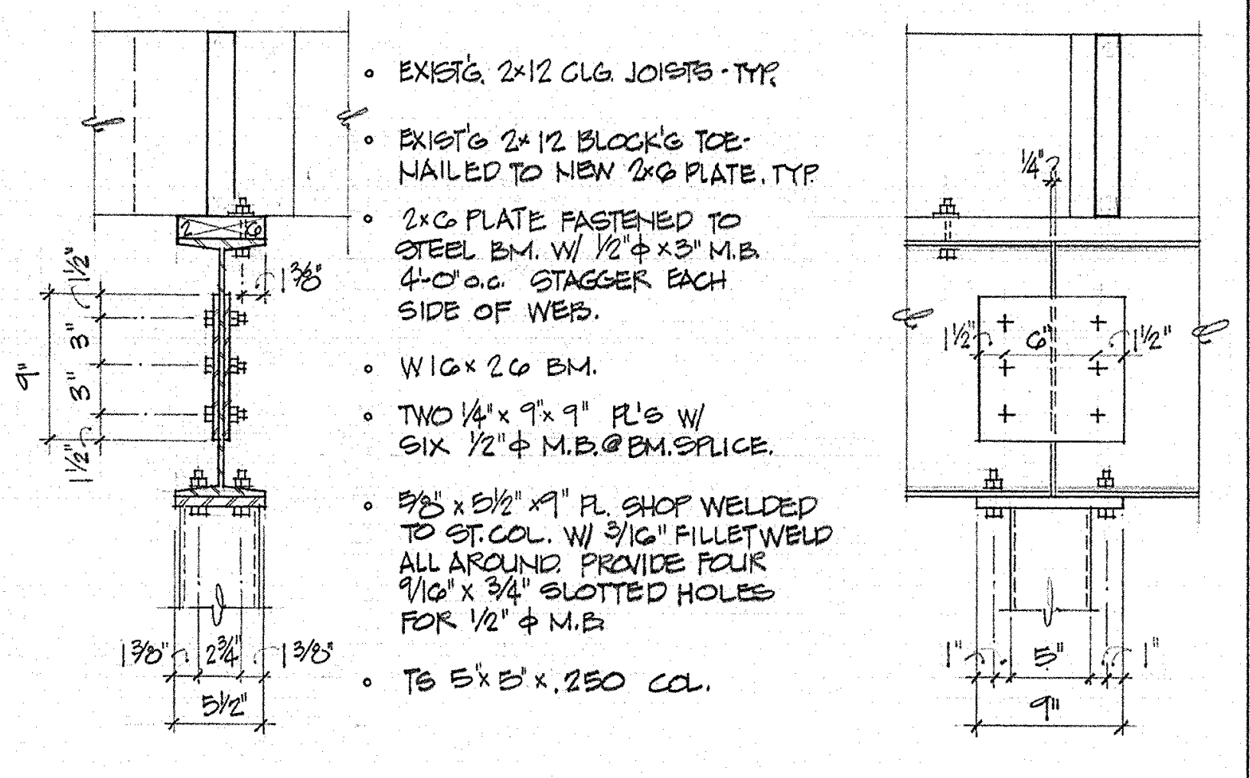
• EXIST'G 2x12 CLG. JOISTS - TYP.
• EXIST'G 2x12 BLOCK'G TOE-NAILED TO NEW 2x6 PLATE. TYP.
• 2x6 PLATE FASTENED TO STEEL BM. W/ 1/2"φ x 3" M.B. 4'-0" o.c. STAGGER EACH SIDE OF WEB.
• W16x26 BM.
• TWO 1/4" x 9" x 9" PL'S W/ SIX 1/2"φ M.B. @ BM. SPLICE.
• 5/8" x 5 1/2" x 9" PL. SHOP WELDED TO ST. COL. W/ 3/16" FILLET WELD ALL AROUND. PROVIDE FOUR 9/16" x 3/4" SLOTTED HOLES FOR 1/2"φ M.B.
• TS 5" x 5" x .250 COL.

3/5 BM. TO 5"x5" COL. CONNECTION / BAND RM. 1 1/2"=1'-0"
BM. MAY BE CONTINUOUS AT CONTRACTOR'S OPTION.

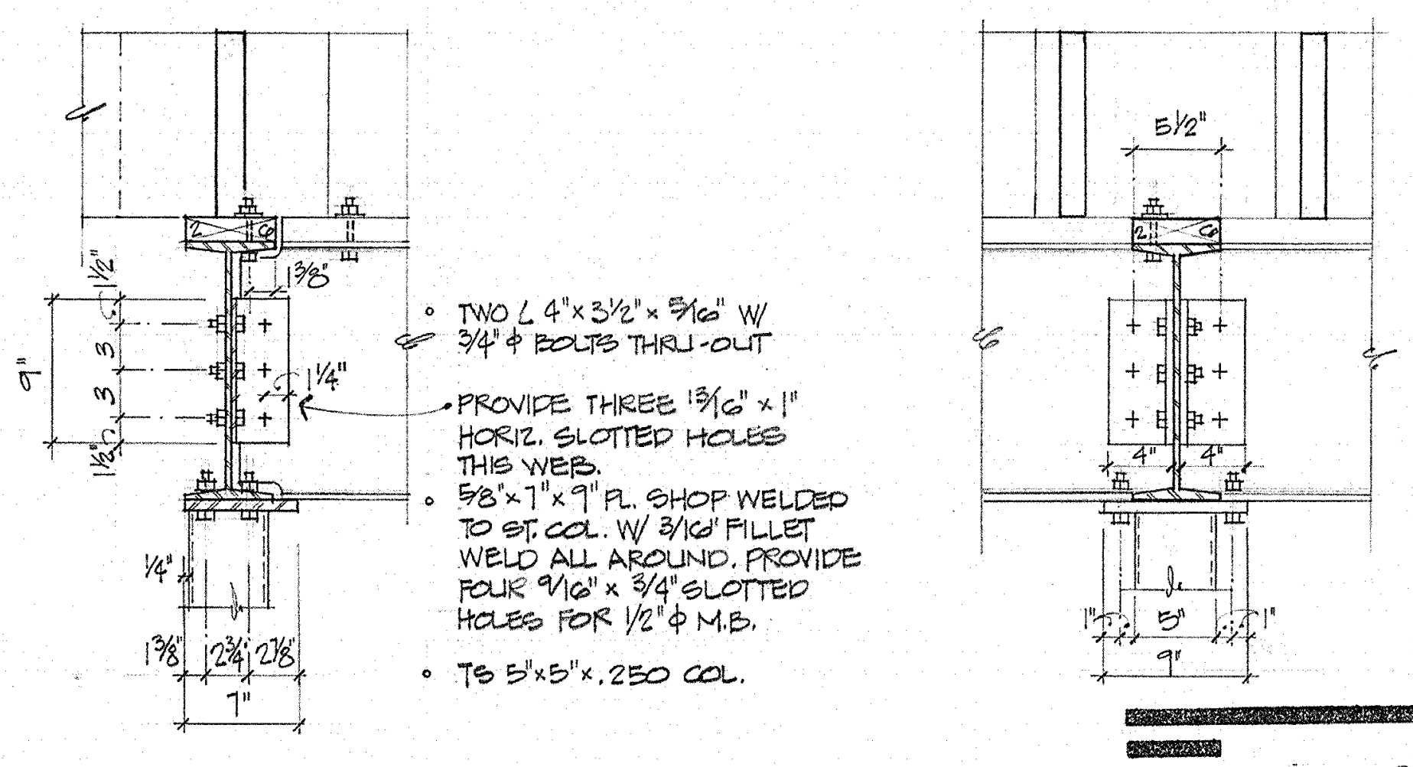
• TWO L 4" x 3 1/2" x 5/16" W/ 3/4"φ BOLTS THRU-OUT
• PROVIDE THREE 13/16" x 1" HORIZ. SLOTTED HOLES THIS WEB.
• 5/8" x 7" x 9" PL. SHOP WELDED TO ST. COL. W/ 3/16" FILLET WELD ALL AROUND. PROVIDE FOUR 9/16" x 3/4" SLOTTED HOLES FOR 1/2"φ M.B.
• TS 5" x 5" x .250 COL.

4/5 BM. TO BM. TO 5"x5" COL. CONN. BAND RM. 1"=1'-0"

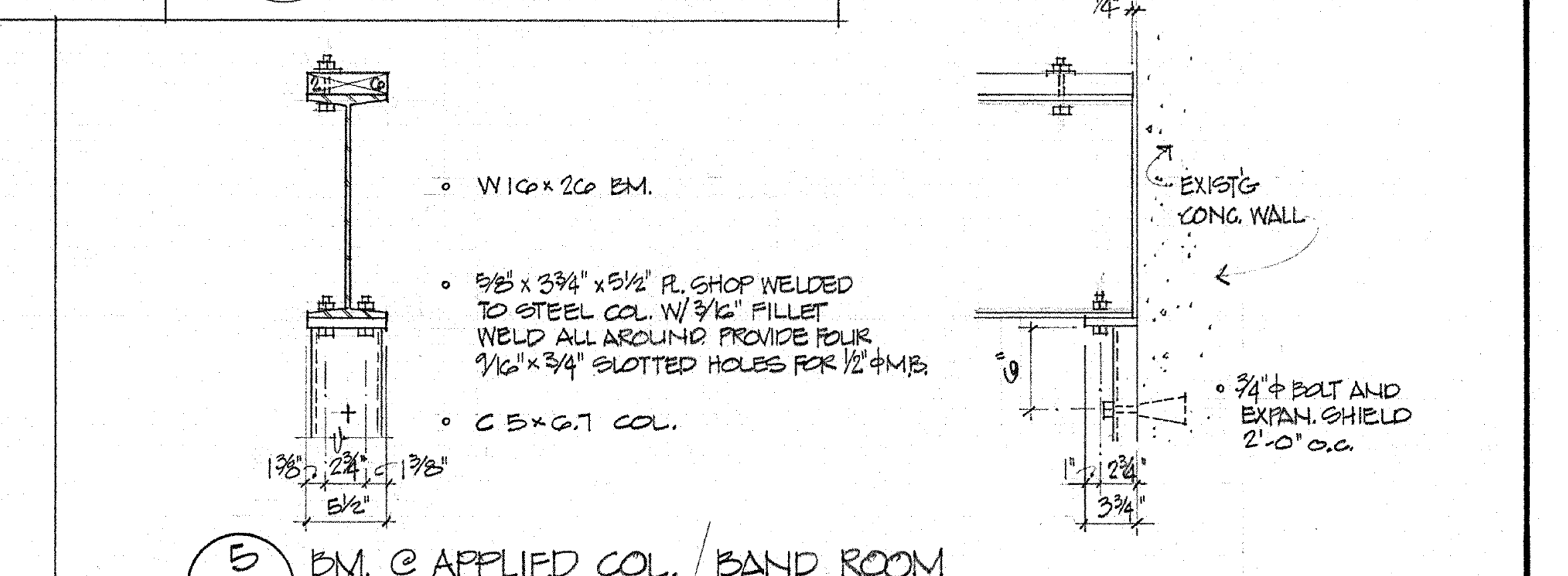
• W16x26 BM.
• 5/8" x 3 3/4" x 5 1/2" PL. SHOP WELDED TO STEEL COL. W/ 3/16" FILLET WELD ALL AROUND. PROVIDE FOUR 9/16" x 3/4" SLOTTED HOLES FOR 1/2"φ M.B.
• C 5x6.7 COL.
EXIST'G CONC. WALL
• 3/4"φ BOLT AND EXPAN. SHIELD 2'-0" o.c.

5/5 BM. @ APPLIED COL. / BAND ROOM 1"=1'-0"

CEILING & ROOF FRAMING PLAN, DETAILS - SECTOR A
SWEET HOME HIGH SCHOOL
ADDITIONS AND ALTERATIONS 1974
DISTRICT 55 LINN COUNTY, OREGON

ARCHITECTS
HAMLIN, MARTIN,
SCHULTZ & GEYER
AIA
159 W. 12TH EUGENE, OREGON 97401

A
5
JOB NO.

CLARE K. HAMLIN
Clare K Hamlin
EUGENE, OREGON

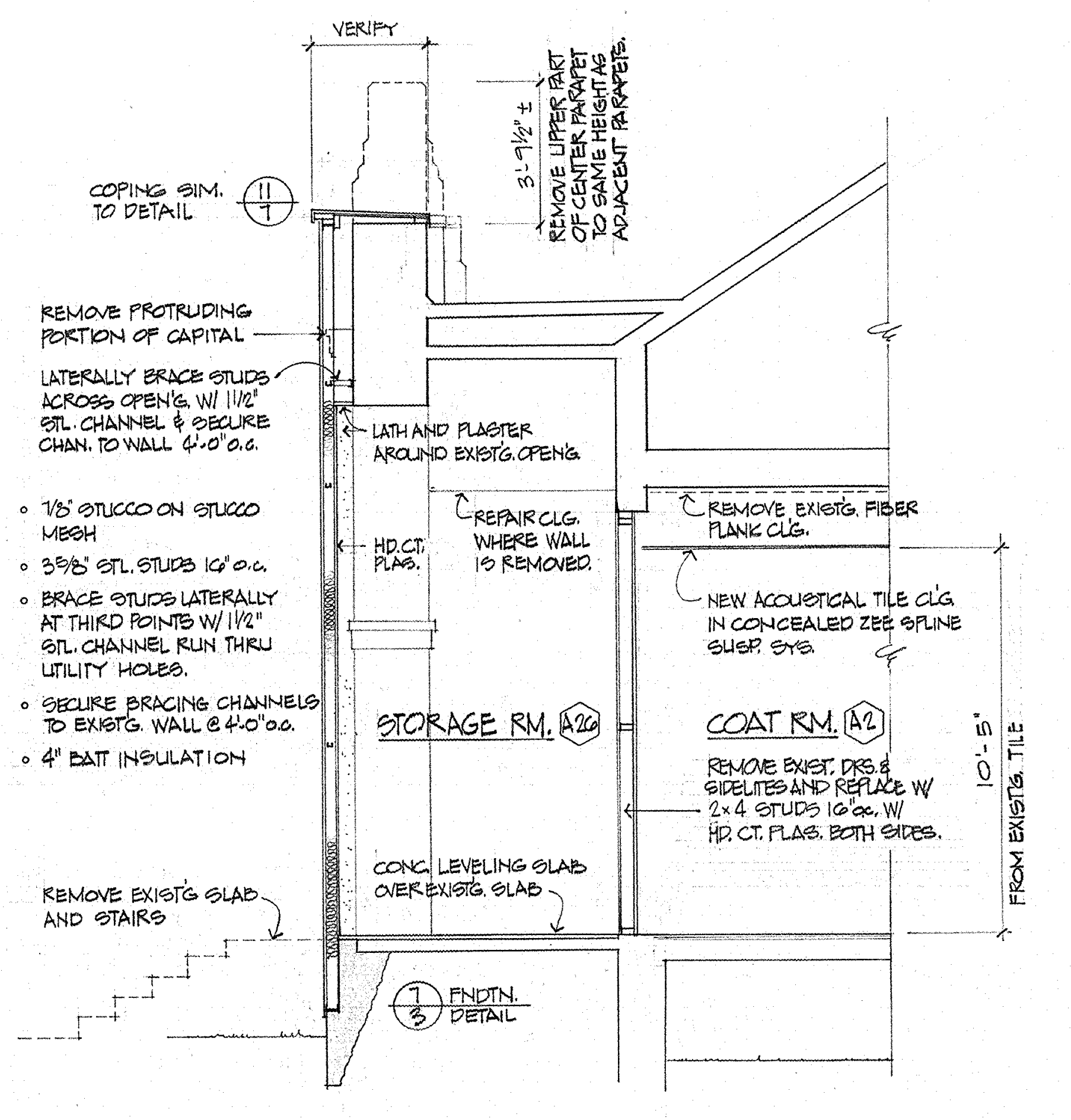
VERIFY
3'-9½" ±
REMOVE UPPER PART OF CENTER PARAPET TO SAME HEIGHT AS ADJACENT PARAPETS.
COPING SIM. TO DETAIL 11/7
REMOVE PROTRUDING PORTION OF CAPITAL
LATERALLY BRACE STUDS ACROSS OPEN'G. W/ 1½" STL. CHANNEL & SECURE CHAN. TO WALL 4'-0" o.c.
LATH AND PLASTER AROUND EXIST'G. OPEN'G.
REPAIR CLG. WHERE WALL IS REMOVED.
REMOVE EXIST'G. FIBER PLANK CLG.
NEW ACOUSTICAL TILE CLG. IN CONCEALED ZEE SPLINE SUSP. SYS.
• 7/8" STUCCO ON STUCCO MESH
• 3⅝" STL. STUDS 16" o.c.
• BRACE STUDS LATERALLY AT THIRD POINTS W/ 1½" STL. CHANNEL RUN THRU UTILITY HOLES.
• SECURE BRACING CHANNELS TO EXIST'G. WALL @ 4'-0" o.c.
• 4" BATT INSULATION
HD. CT. PLAS.
STORAGE RM. A26
COAT RM. A2
REMOVE EXIST. DRS. & SIDELITES AND REPLACE W/ 2×4 STUDS 16" o.c. W/ HD. CT. PLAS. BOTH SIDES.
10'-5" FROM EXIST'G. TILE
CONC. LEVELING SLAB OVER EXIST'G. SLAB
REMOVE EXIST'G SLAB AND STAIRS
FNDTN. DETAIL 7/3

A/6 SECTION @ EXIST'G NORTH/EAST ENTRY CLOSURE 1/4" = 1'-0"

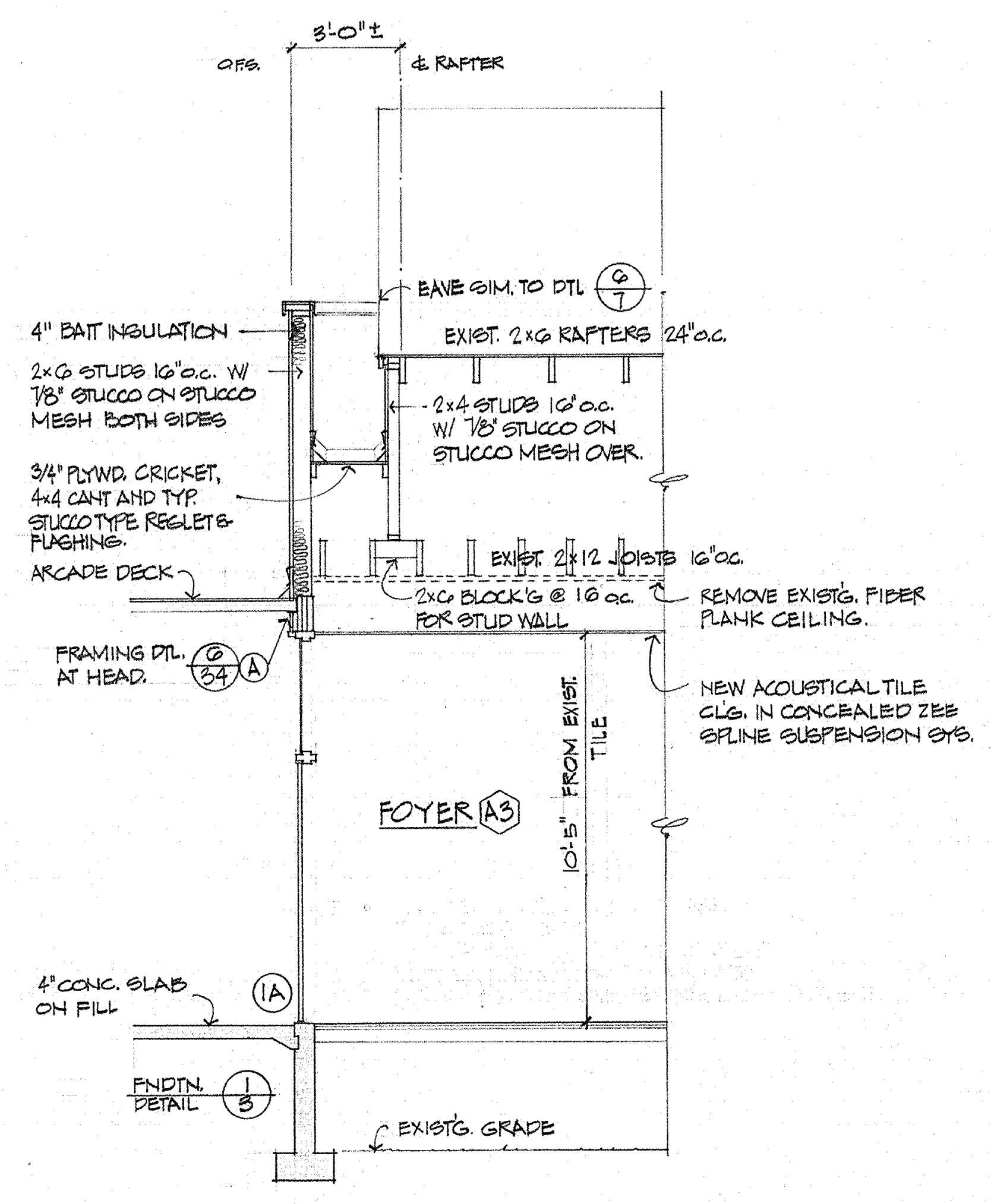
3'-0" ±
O.F.S.
℄ RAFTER
EAVE SIM. TO DTL 6/7
EXIST. 2×6 RAFTERS 24" o.c.
4" BATT INSULATION
2×6 STUDS 16" o.c. W/ 7/8" STUCCO ON STUCCO MESH BOTH SIDES
2×4 STUDS 16" o.c. W/ 7/8" STUCCO ON STUCCO MESH OVER.
3/4" PLYWD. CRICKET, 4×4 CANT AND TYP. STUCCO TYPE REGLET & FLASHING.
EXIST. 2×12 JOISTS 16" o.c.
ARCADE DECK
2×6 BLOCK'G @ 16 o.c. FOR STUD WALL
REMOVE EXIST'G. FIBER PLANK CEILING.
FRAMING DTL. AT HEAD. 6/34 A
NEW ACOUSTICAL TILE CLG. IN CONCEALED ZEE SPLINE SUSPENSION SYS.
FOYER A3
10'-5" FROM EXIST. TILE
4" CONC. SLAB ON FILL
1A
FNDTN. DETAIL 1/3
EXIST'G. GRADE

B/6 SECTION THRU ENTRY TO AUDITORIUM FOYER 1/4" = 1'-0"

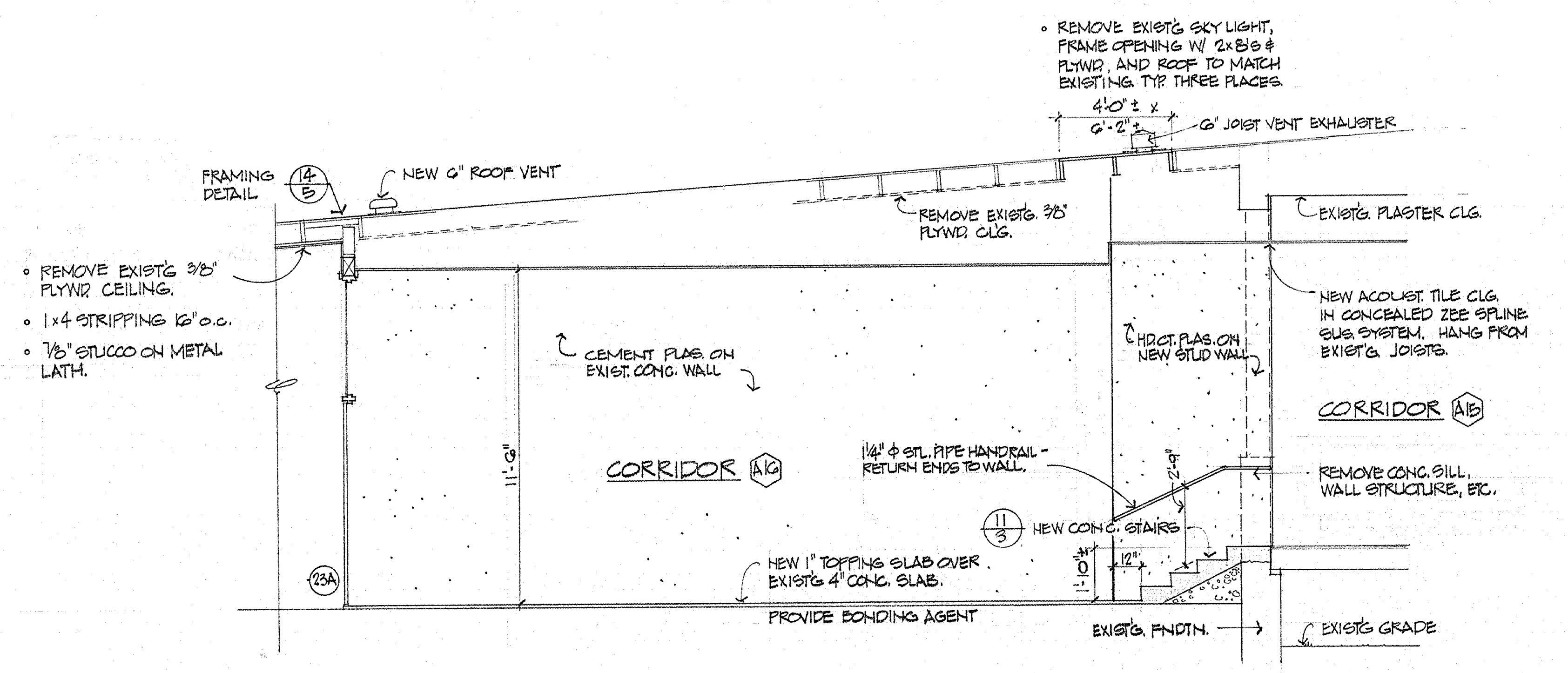
• REMOVE EXIST'G SKY LIGHT, FRAME OPENING W/ 2×8's & PLYWD., AND ROOF TO MATCH EXISTING. TYP. THREE PLACES.
4'-0" ± × 6'-2" ±
6" JOIST VENT EXHAUSTER
FRAMING DETAIL 14/5
NEW 6" ROOF VENT
REMOVE EXIST'G. 3/8" PLYWD. CLG.
EXIST'G. PLASTER CLG.
• REMOVE EXIST'G 3/8" PLYWD. CEILING.
• 1×4 STRIPPING 16" o.c.
• 7/8" STUCCO ON METAL LATH.
CEMENT PLAS. ON EXIST. CONC. WALL
HD. CT. PLAS. ON NEW STUD WALL
NEW ACOUST. TILE CLG. IN CONCEALED ZEE SPLINE SUS. SYSTEM. HANG FROM EXIST'G. JOISTS.
11'-6"
CORRIDOR A16
CORRIDOR A15
1¼" ɸ STL. PIPE HANDRAIL - RETURN ENDS TO WALL.
2'-9"
REMOVE CONC. SILL, WALL STRUCTURE, ETC.
11/3 NEW CONC. STAIRS
12"
23A
NEW 1" TOPPING SLAB OVER EXIST'G 4" CONC. SLAB.
PROVIDE BONDING AGENT
EXIST'G. FNDTN.
EXIST'G GRADE

C/6 SECTION LOOKING WEST THRU CORRIDOR A16 WEST WALL ELEVATED 1/4" = 1'-0"

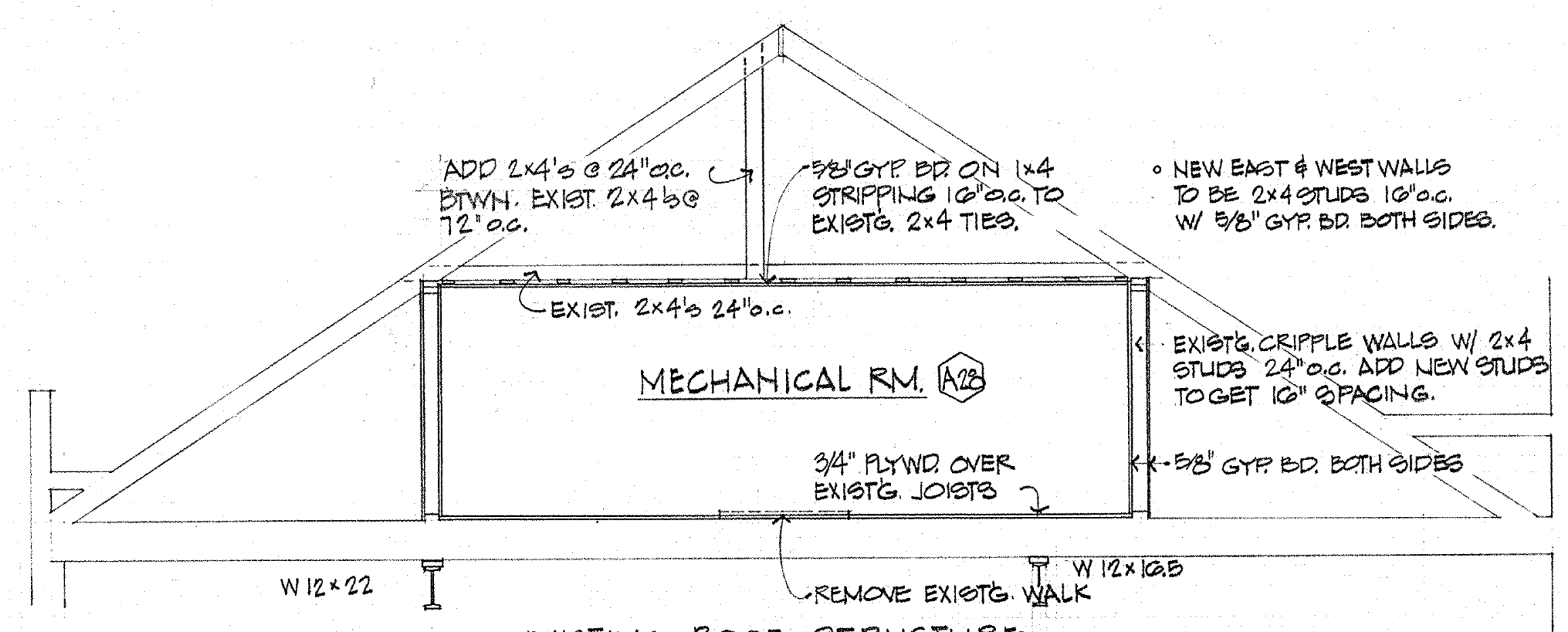
ADD 2×4's @ 24" o.c. BTWN. EXIST. 2×4's @ 72" o.c.
5/8" GYP. BD. ON 1×4 STRIPPING 16" o.c. TO EXIST'G. 2×4 TIES.
• NEW EAST & WEST WALLS TO BE 2×4 STUDS 16" o.c. W/ 5/8" GYP. BD. BOTH SIDES.
EXIST. 2×4's 24" o.c.
MECHANICAL RM. A28
EXIST'G. CRIPPLE WALLS W/ 2×4 STUDS 24" o.c. ADD NEW STUDS TO GET 16" SPACING.
3/4" PLYWD. OVER EXIST'G. JOISTS
5/8" GYP. BD. BOTH SIDES
W 12 × 22
W 12 × 16.5
REMOVE EXIST'G. WALK
EXISTING ROOF STRUCTURE

D/6 SECTION LOOKING EAST THRU MECHANICAL ROOM A28 1/4" = 1'-0"

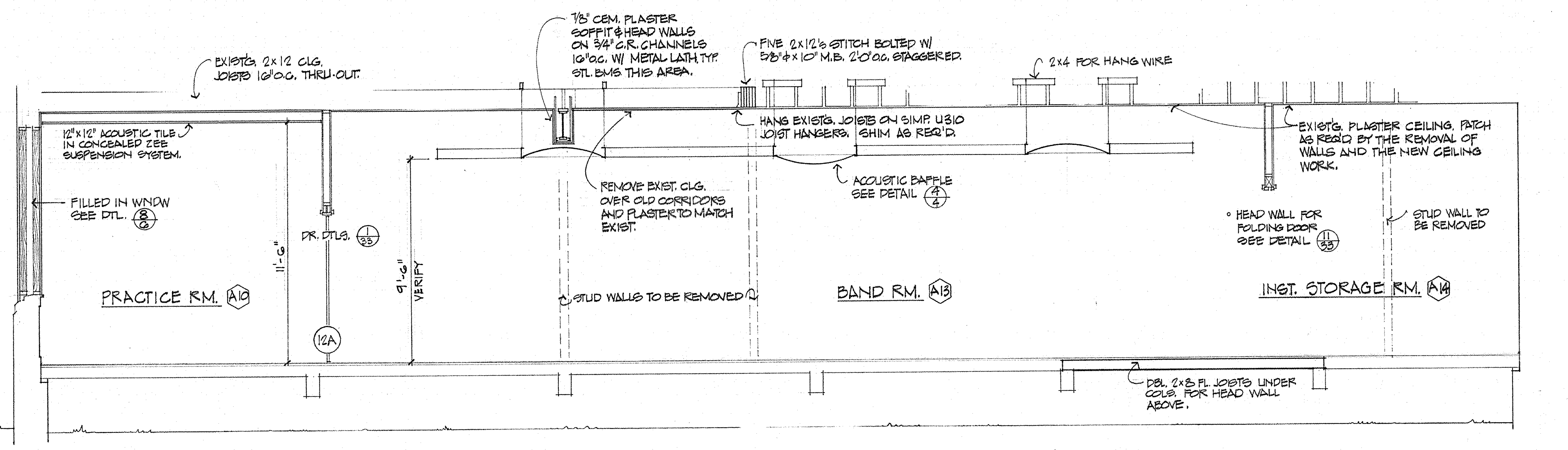
EXIST'G. 2×12 CLG. JOISTS 16" o.c. THRU-OUT.
7/8" CEM. PLASTER SOFFIT & HEAD WALLS ON 3/4" C.R. CHANNELS 16" o.c. W/ METAL LATH. TYP. STL. BMS. THIS AREA.
FIVE 2×12's STITCH BOLTED W/ 5/8" ɸ × 10" M.B. 2'-0" o.c. STAGGERED.
2×4 FOR HANG WIRE
12" × 12" ACOUSTIC TILE IN CONCEALED ZEE SUSPENSION SYSTEM.
HANG EXIST'G. JOISTS ON SIMP. U310 JOIST HANGERS. SHIM AS REQ'D.
EXIST'G. PLASTER CEILING. PATCH AS REQ'D BY THE REMOVAL OF WALLS AND THE NEW CEILING WORK.
REMOVE EXIST. CLG. OVER OLD CORRIDORS AND PLASTER TO MATCH EXIST.
ACOUSTIC BAFFLE SEE DETAIL 4/4
FILLED IN WNDW SEE DTL. 8/6
DR. DTLS. 1/33
• HEAD WALL FOR FOLDING DOOR SEE DETAIL 11/33
STUD WALL TO BE REMOVED
11'-6"
9'-6" VERIFY
STUD WALLS TO BE REMOVED
PRACTICE RM. A10
BAND RM. A13
INST. STORAGE RM. A14
12A
DBL. 2×8 FL. JOISTS UNDER COLS. FOR HEAD WALL ABOVE.

E/6 SECTION LOOKING EAST THRU BAND ROOM A13 1/4" = 1'-0"

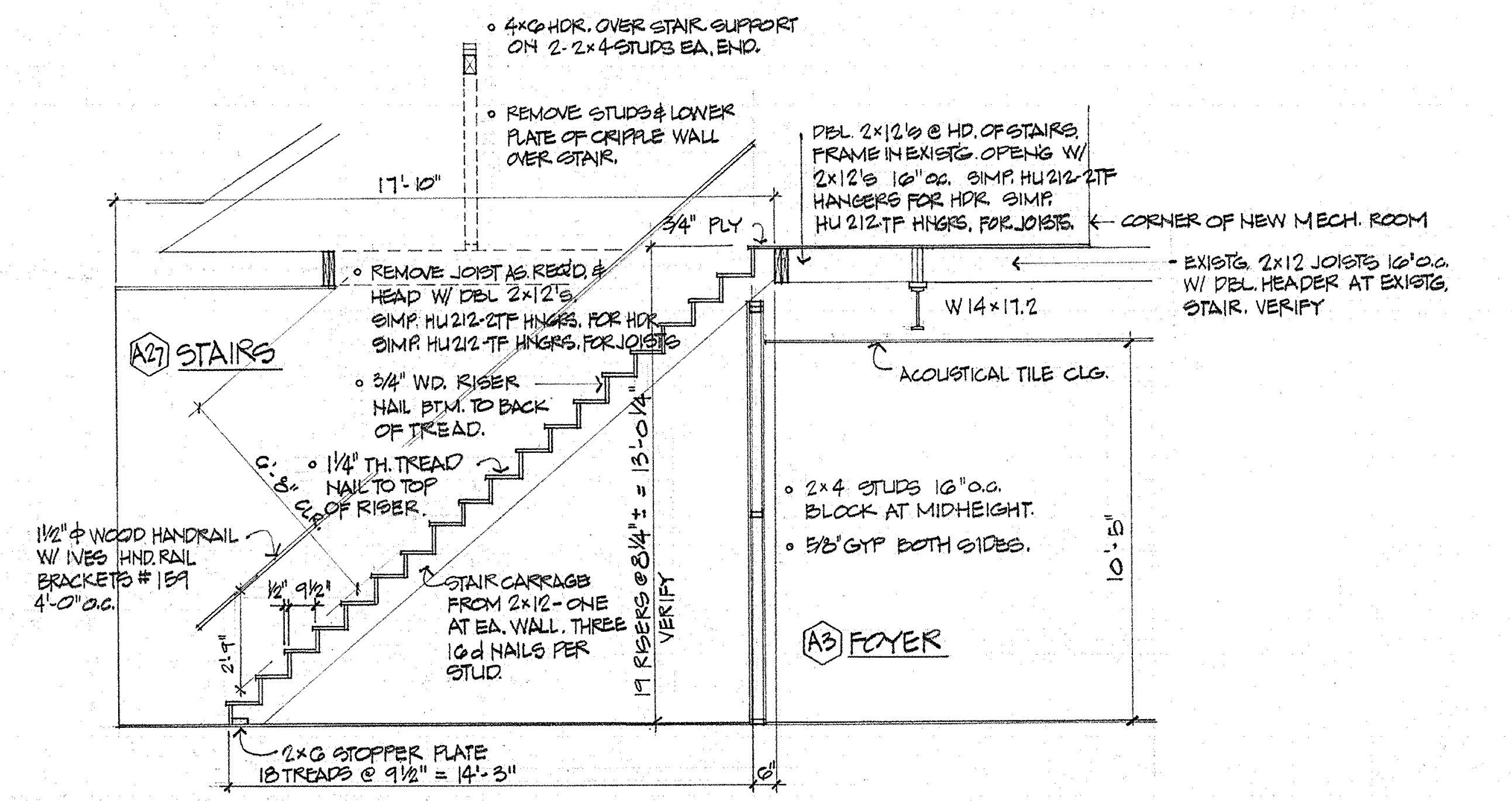
• 4×6 HDR. OVER STAIR SUPPORT ON 2-2×4 STUDS EA. END.
• REMOVE STUDS & LOWER PLATE OF CRIPPLE WALL OVER STAIR.
17'-10"
3/4" PLY
DBL. 2×12's @ HD. OF STAIRS. FRAME IN EXIST'G. OPEN'G W/ 2×12's 16" o.c. SIMP. HU212-2TF HANGERS FOR HDR. SIMP. HU212-TF HNGRS. FOR JOISTS.
CORNER OF NEW MECH. ROOM
• REMOVE JOIST AS REQ'D & HEAD W/ DBL 2×12's. SIMP. HU212-2TF HNGRS. FOR HDR. SIMP. HU212-TF HNGRS. FOR JOISTS
EXIST'G. 2×12 JOISTS 16" o.c. W/ DBL. HEADER AT EXIST'G. STAIR. VERIFY
W 14 × 17.2
A27 STAIRS
ACOUSTICAL TILE CLG.
• 3/4" WD. RISER HAIL BTM. TO BACK OF TREAD.
• 1¼" TH. TREAD NAIL TO TOP OF RISER.
6'-8" CLR.
• 2×4 STUDS 16" o.c. BLOCK AT MIDHEIGHT.
• 5/8" GYP BOTH SIDES.
1½" ɸ WOOD HANDRAIL W/ IVES HND. RAIL BRACKETS #159 4'-0" o.c.
½" 9½"
STAIR CARRAGE FROM 2×12 - ONE AT EA. WALL. THREE 16d NAILS PER STUD.
19 RISERS @ 8¼" ± = 13'-0¼" VERIFY
10'-5"
2'-9"
A3 FOYER
2×6 STOPPER PLATE
18 TREADS @ 9½" = 14'-3"
6"

F/6 SECTION THRU STAIR A27 1/4" = 1'-0"

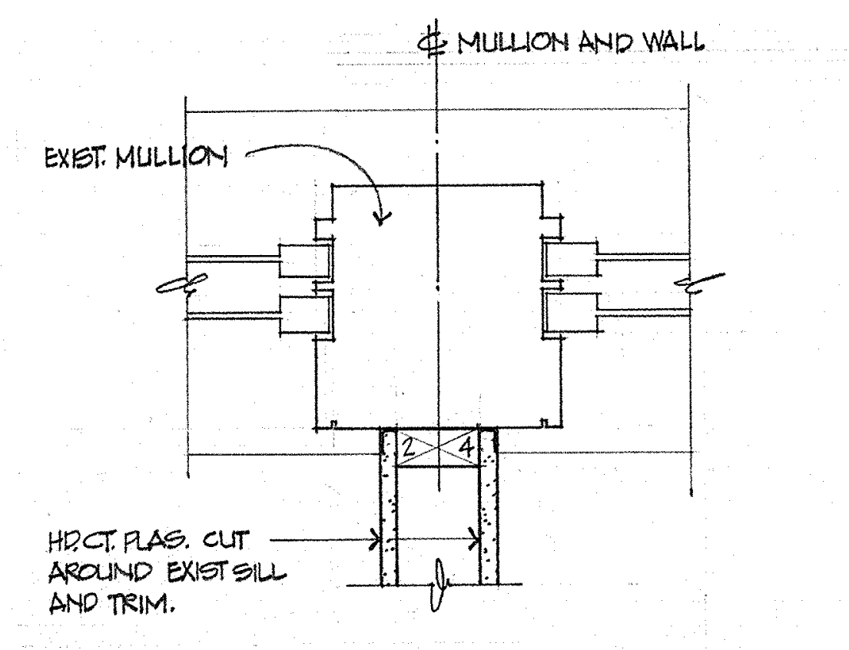
℄ MULLION AND WALL
EXIST. MULLION
2 4
HD. CT. PLAS. CUT AROUND EXIST SILL AND TRIM.

7/6 NEW WALL @ EXIST. WINDOW MULLION 1½" = 1'-0"

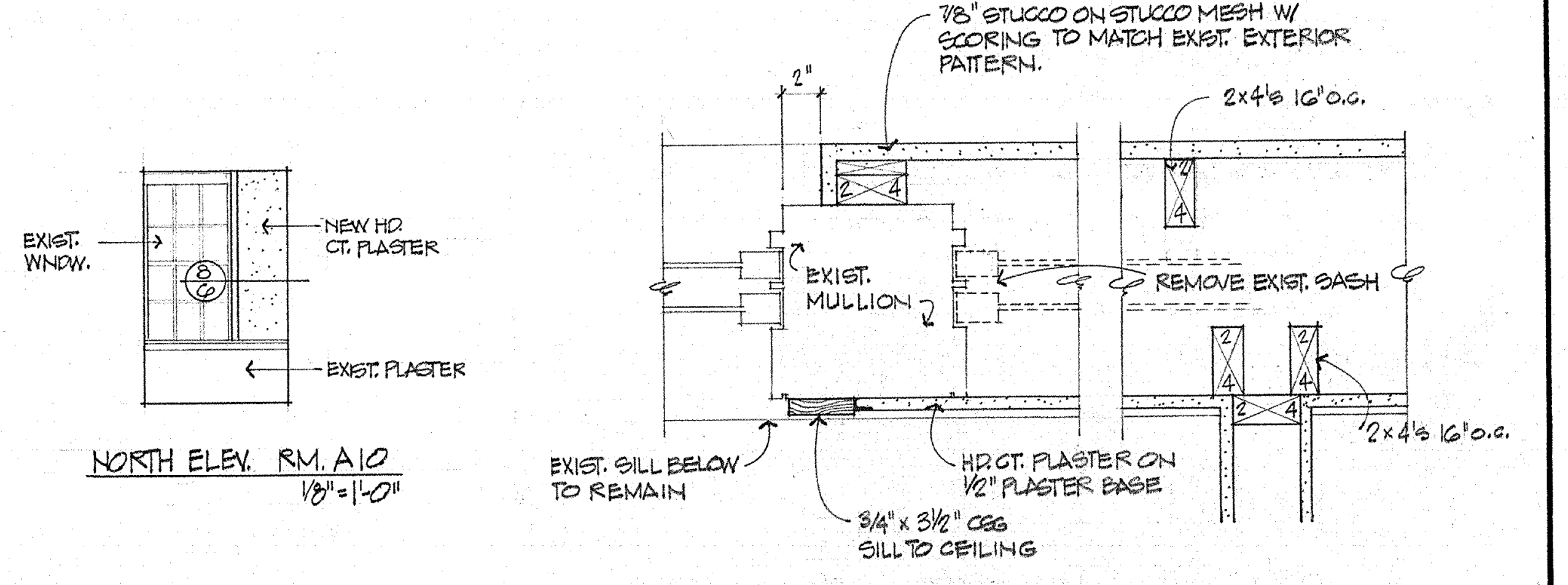
EXIST. WNDW.
8/6
NEW HD. CT. PLASTER
EXIST. PLASTER
NORTH ELEV. RM. A10 1/8" = 1'-0"
7/8" STUCCO ON STUCCO MESH W/ SCORING TO MATCH EXIST. EXTERIOR PATTERN.
2"
2×4's 16" o.c.
EXIST. MULLION
REMOVE EXIST. SASH
EXIST. SILL BELOW TO REMAIN
HD. CT. PLASTER ON ½" PLASTER BASE
3/4" × 3½" CSG SILL TO CEILING
2×4's 16" o.c.

8/6 NEW JAMB DETAIL AT EXIST. MULLION W/ ADJACENT WINDOW FILLED IN. 1½" = 1'-0"

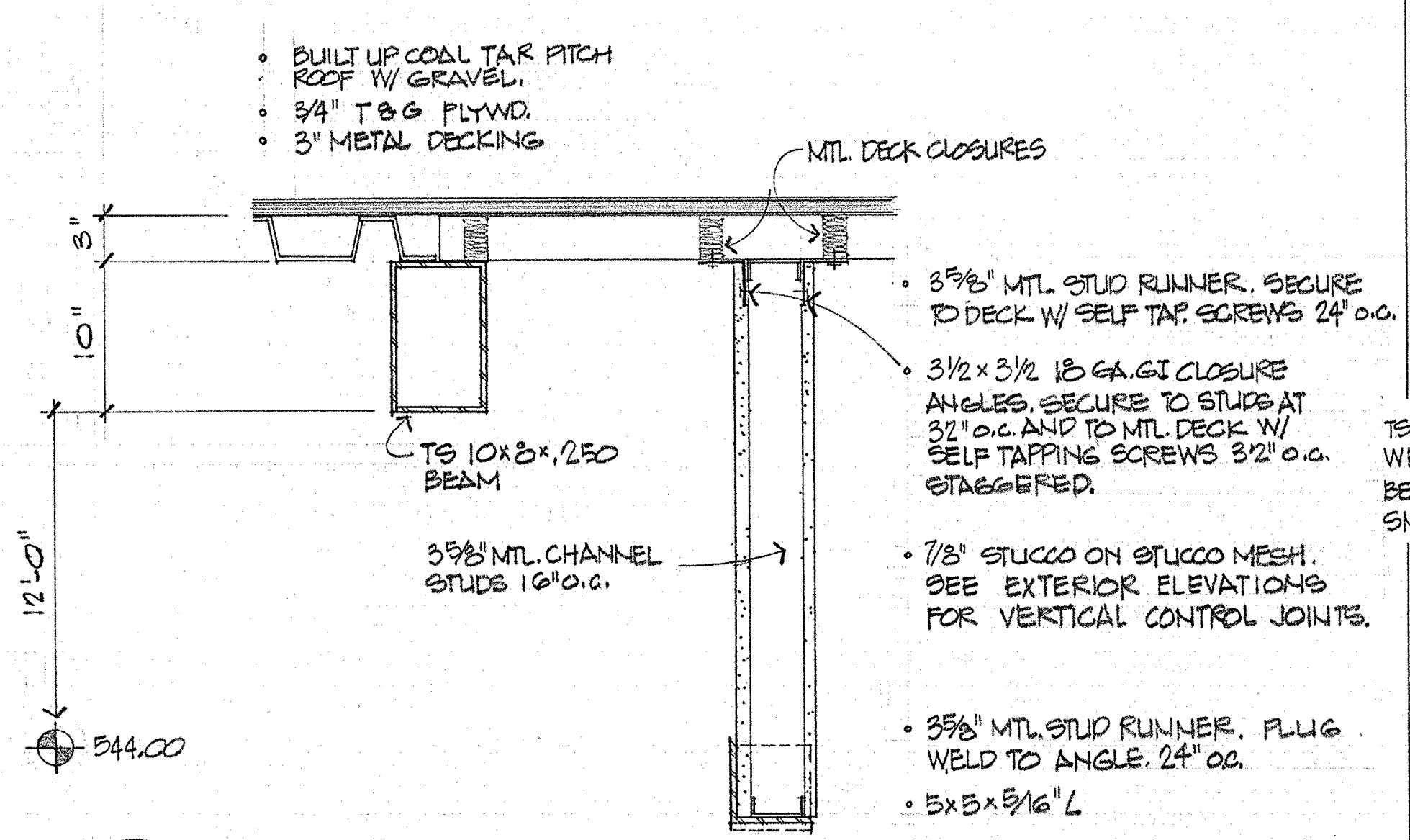
• BUILT UP COAL TAR PITCH ROOF W/ GRAVEL.
• 3/4" T&G PLYWD.
• 3" METAL DECKING
MTL. DECK CLOSURES
3"
10"
12'-0"
TS 10×8×.250 BEAM
3⅝" MTL. CHANNEL STUDS 16" o.c.
544.00
• 3⅝" MTL. STUD RUNNER. SECURE TO DECK W/ SELF TAP. SCREWS 24" o.c.
• 3½ × 3½ 18 GA. GI CLOSURE ANGLES. SECURE TO STUDS AT 32" o.c. AND TO MTL. DECK W/ SELF TAPPING SCREWS 32" o.c. STAGGERED.
• 7/8" STUCCO ON STUCCO MESH. SEE EXTERIOR ELEVATIONS FOR VERTICAL CONTROL JOINTS.
• 3⅝" MTL. STUD RUNNER. PLUG WELD TO ANGLE. 24" o.c.
• 5×5×5/16" ∠
• 5×5×5/16" ∠ 5" LONG W/ LEG UP @ END CONDITION. ONE 5/8" ɸ THRU BOLT TO FASCIA ANGLE & TWO 5/8" ɸ M.B. & EXPAN. SHIELDS TO CONC. WALL.

1/6 SECONDARY ARCADE DECK TO TYP. ARCADE DECK - SOUTH OF AUD.

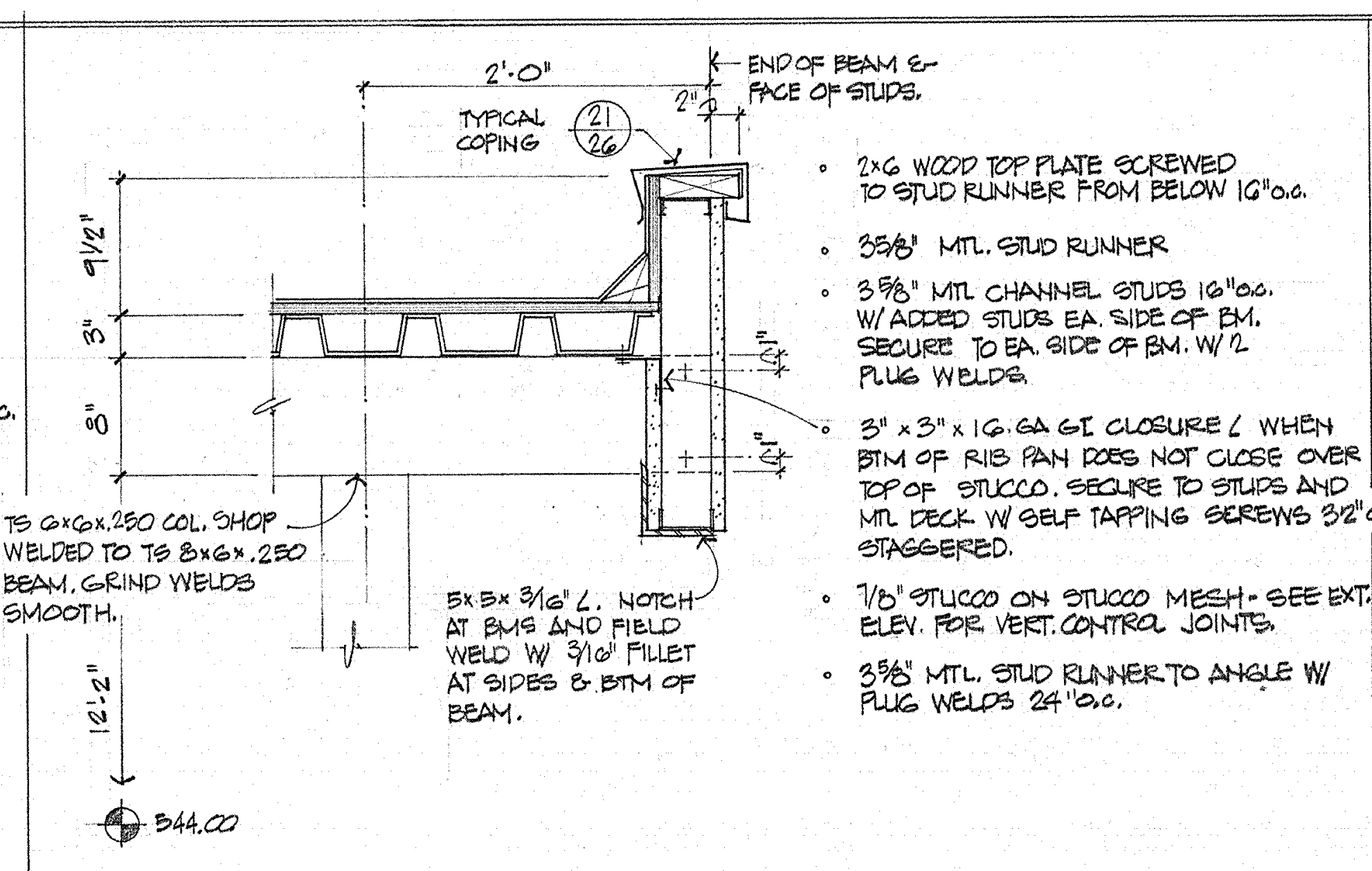
2'-0"
END OF BEAM & FACE OF STUDS.
2"
TYPICAL COPING 21/26
9½"
3"
8"
4"
12'-2"
544.00
TS 6×6×.250 COL. SHOP WELDED TO TS 8×6×.250 BEAM. GRIND WELDS SMOOTH.
5×5×3/16" ∠. NOTCH AT BMS AND FIELD WELD W/ 3/16" FILLET AT SIDES & BTM OF BEAM.
• 2×6 WOOD TOP PLATE SCREWED TO STUD RUNNER FROM BELOW 16" o.c.
• 3⅝" MTL. STUD RUNNER
• 3⅝" MTL CHANNEL STUDS 16" o.c. W/ ADDED STUDS EA. SIDE OF BM. SECURE TO EA. SIDE OF BM. W/ 2 PLUG WELDS.
• 3" × 3" × 16 GA GI CLOSURE ∠ WHEN BTM OF RIB PAN DOES NOT CLOSE OVER TOP OF STUCCO. SECURE TO STUDS AND MTL DECK W/ SELF TAPPING SCREWS 32" o.c. STAGGERED.
• 7/8" STUCCO ON STUCCO MESH - SEE EXT. ELEV. FOR VERT. CONTROL JOINTS.
• 3⅝" MTL. STUD RUNNER TO ANGLE W/ PLUG WELDS 24" o.c.

2/6 SECONDARY ARCADE FASCIA - SOUTH OF AUD. 1" = 1'-0"

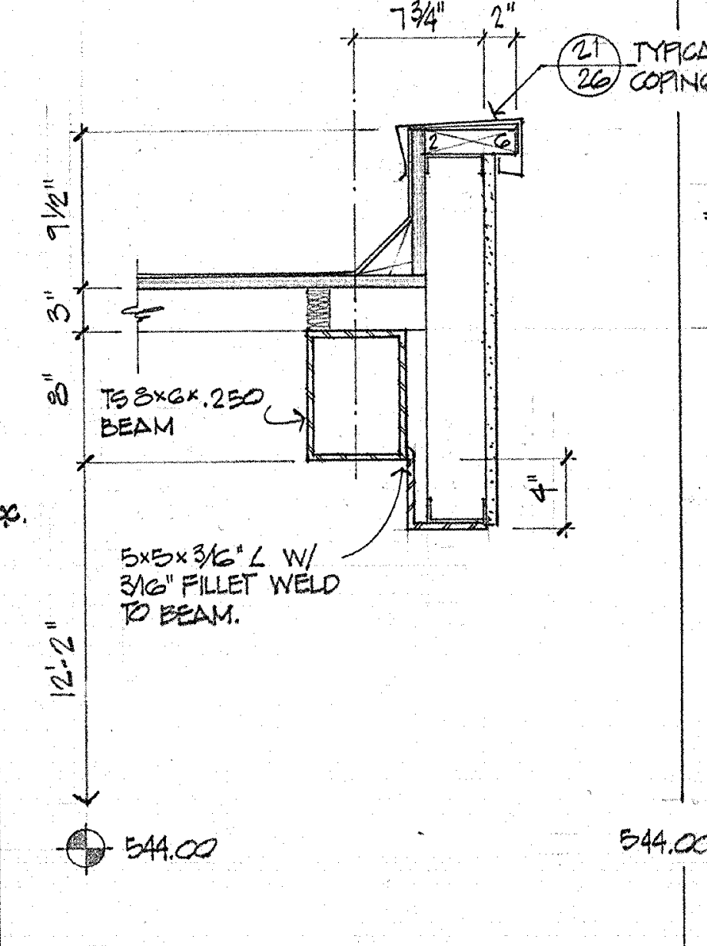
7¾"
2"
21/26 TYPICAL COPING
9½"
3"
8"
4"
12'-2"
TS 8×6×.250 BEAM
5×5×3/16" ∠ W/ 3/16" FILLET WELD TO BEAM.
544.00

3/6 SEC. ARCADE FASCIA WEST OF SHOP BLDG. 1" = 1'-0"

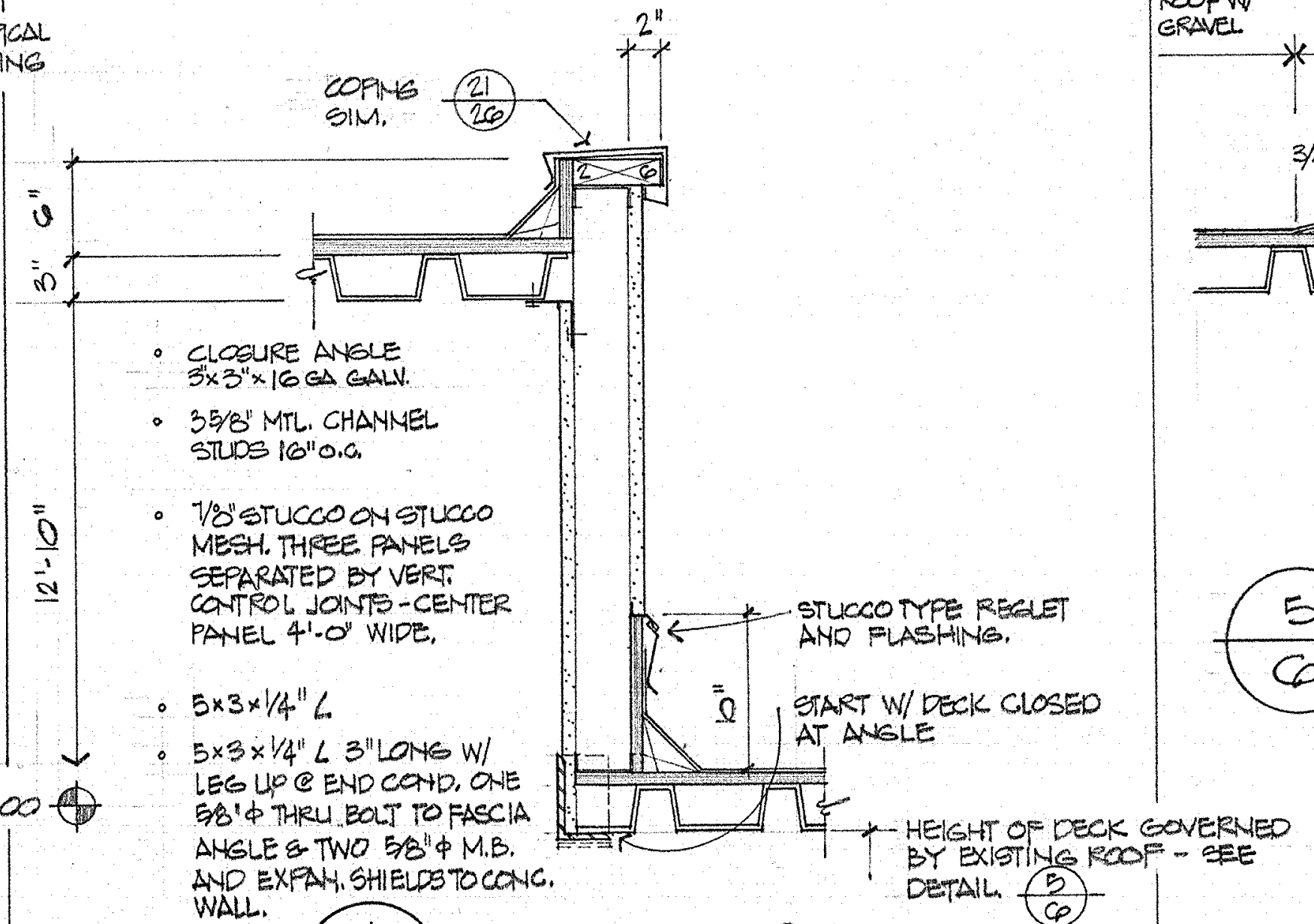
2"
COPING SIM. 21/26
6"
3"
12'-10"
544.00
• CLOSURE ANGLE 3"×3"×16 GA GALV.
• 3⅝" MTL. CHANNEL STUDS 16" o.c.
• 7/8" STUCCO ON STUCCO MESH. THREE PANELS SEPARATED BY VERT. CONTROL JOINTS - CENTER PANEL 4'-0" WIDE.
• 5×3×1/4" ∠
• 5×3×1/4" ∠ 3" LONG W/ LEG UP @ END COND. ONE 5/8" ɸ THRU BOLT TO FASCIA ANGLE & TWO 5/8" ɸ M.B. AND EXPAN. SHIELDS TO CONC. WALL.
STUCCO TYPE REGLET AND FLASHING.
10"
START W/ DECK CLOSED AT ANGLE
HEIGHT OF DECK GOVERNED BY EXISTING ROOF - SEE DETAIL 5/6

4/6 ELEV. TRANSITION IN ARCADE DECK - EAST OF AUD. 1" = 1'-0"

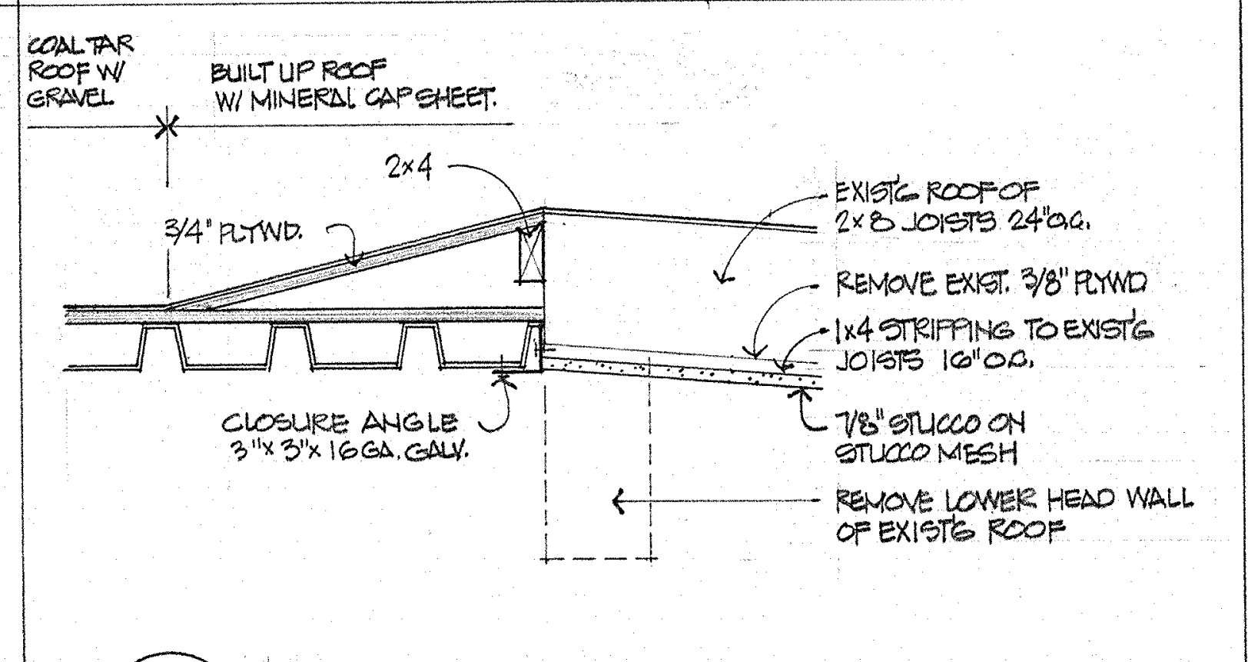
COAL TAR ROOF W/ GRAVEL
BUILT UP ROOF W/ MINERAL CAP SHEET.
2×4
3/4" PLYWD.
EXIST'G ROOF OF 2×8 JOISTS 24" o.c.
REMOVE EXIST. 3/8" PLYWD
1×4 STRIPPING TO EXIST'G JOISTS 16" o.c.
CLOSURE ANGLE 3" × 3" × 16 GA. GALV.
7/8" STUCCO ON STUCCO MESH
REMOVE LOWER HEAD WALL OF EXIST'G ROOF

5/6 CONNECTION OF SEC. ARCADE DECK TO EXIST. ROOF 1" = 1'-0"

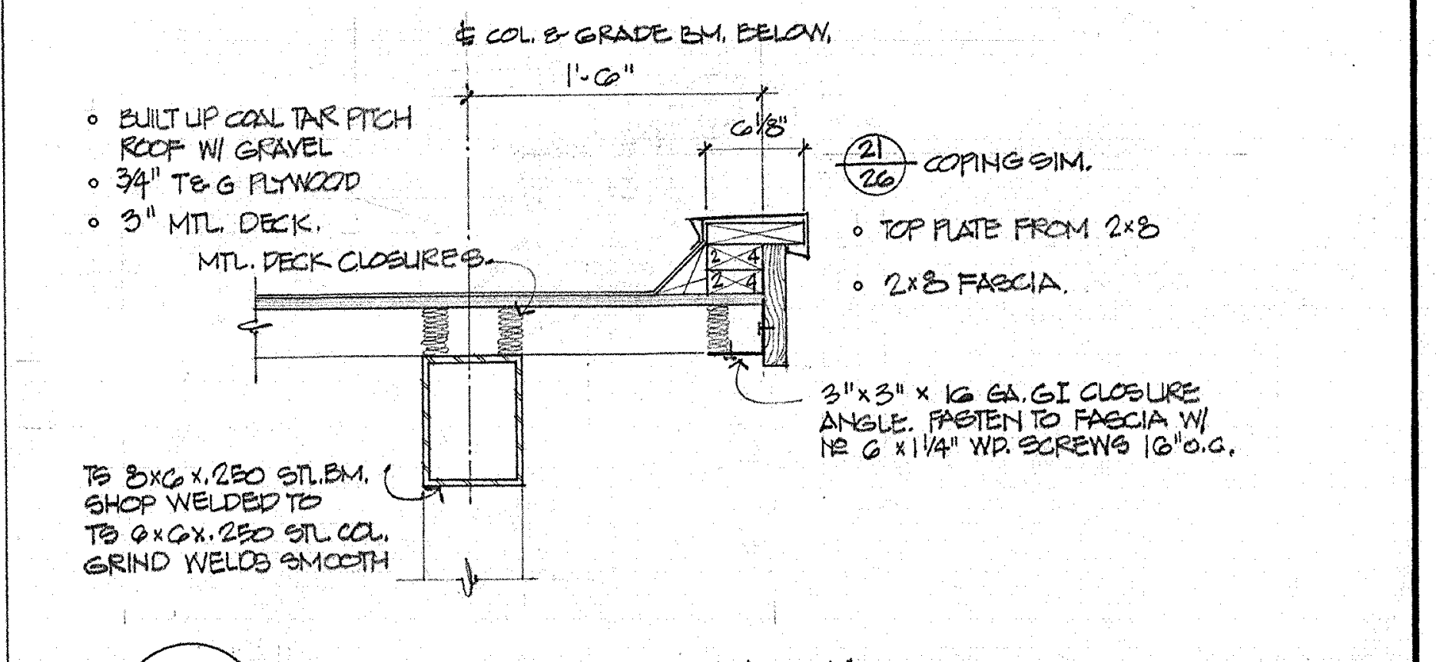
℄ COL. & GRADE BM. BELOW.
1'-6"
6⅛"
• BUILT UP COAL TAR PITCH ROOF W/ GRAVEL
• 3/4" T&G PLYWOOD
• 3" MTL. DECK.
MTL. DECK CLOSURES
21/26 COPING SIM.
• TOP PLATE FROM 2×8
• 2×8 FASCIA.
2 4
3" × 3" × 16 GA. GI CLOSURE ANGLE. FASTEN TO FASCIA W/ № 6 × 1¼" WD. SCREWS 16" o.c.
TS 8×6×.250 STL. BM. SHOP WELDED TO TS 6×6×.250 STL. COL. GRIND WELDS SMOOTH

6/6 SECONDARY ARCADE FASCIA BTWN LAUNDRY & SHOP BUILD'G. 1" = 1'-0"

SECTIONS - SECTOR A

SWEET HOME HIGH SCHOOL
ADDITIONS AND ALTERATIONS 1974
DISTRICT 55 LINN COUNTY, OREGON

ARCHITECTS
HAMLIN, MARTIN,
SCHULTZ & GEYER
AIA
159 W. 12TH EUGENE, OREGON 97401

A
6
JOB NO.

REGISTERED ARCHITECT
CLARE K. HAMLIN
Clare K Hamlin
EUGENE, OREGON
STATE OF OREGON

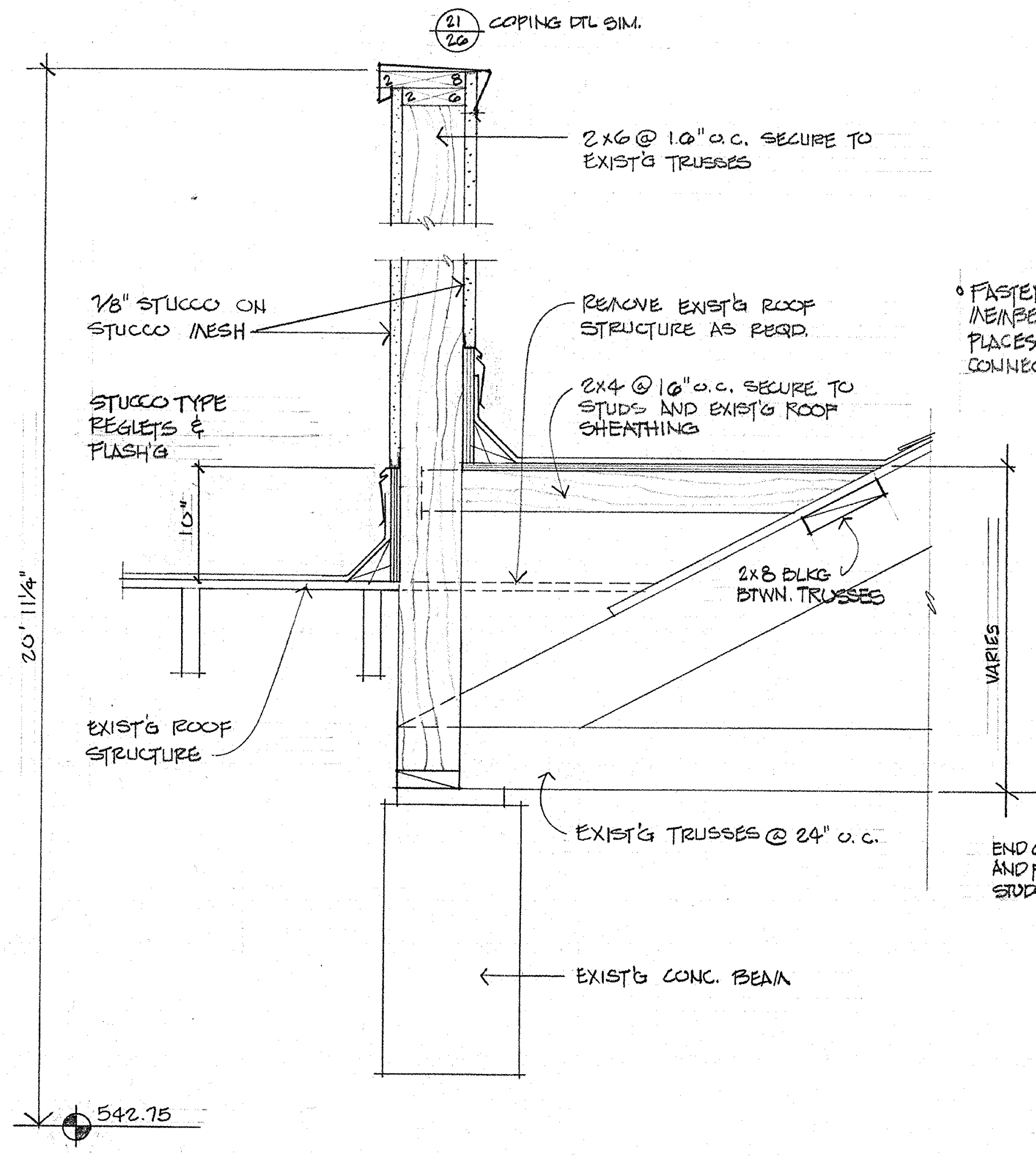
21/26 COPING DTL SIM.
2x6 @ 16" o.c. SECURE TO EXIST'G TRUSSES
7/8" STUCCO ON STUCCO MESH
REMOVE EXIST'G ROOF STRUCTURE AS REQD.
2x4 @ 16" o.c. SECURE TO STUDS AND EXIST'G ROOF SHEATHING
STUCCO TYPE REGLETS & FLASH'G
10"
20' 11 1/4"
2x8 BLKG BTWN. TRUSSES
VARIES
EXIST'G ROOF STRUCTURE
EXIST'G TRUSSES @ 24" o.c.
EXIST'G CONC. BEAM
542.75

12/7 PARAPET ABOVE EXIST'G ROOF
1"=1'-0"

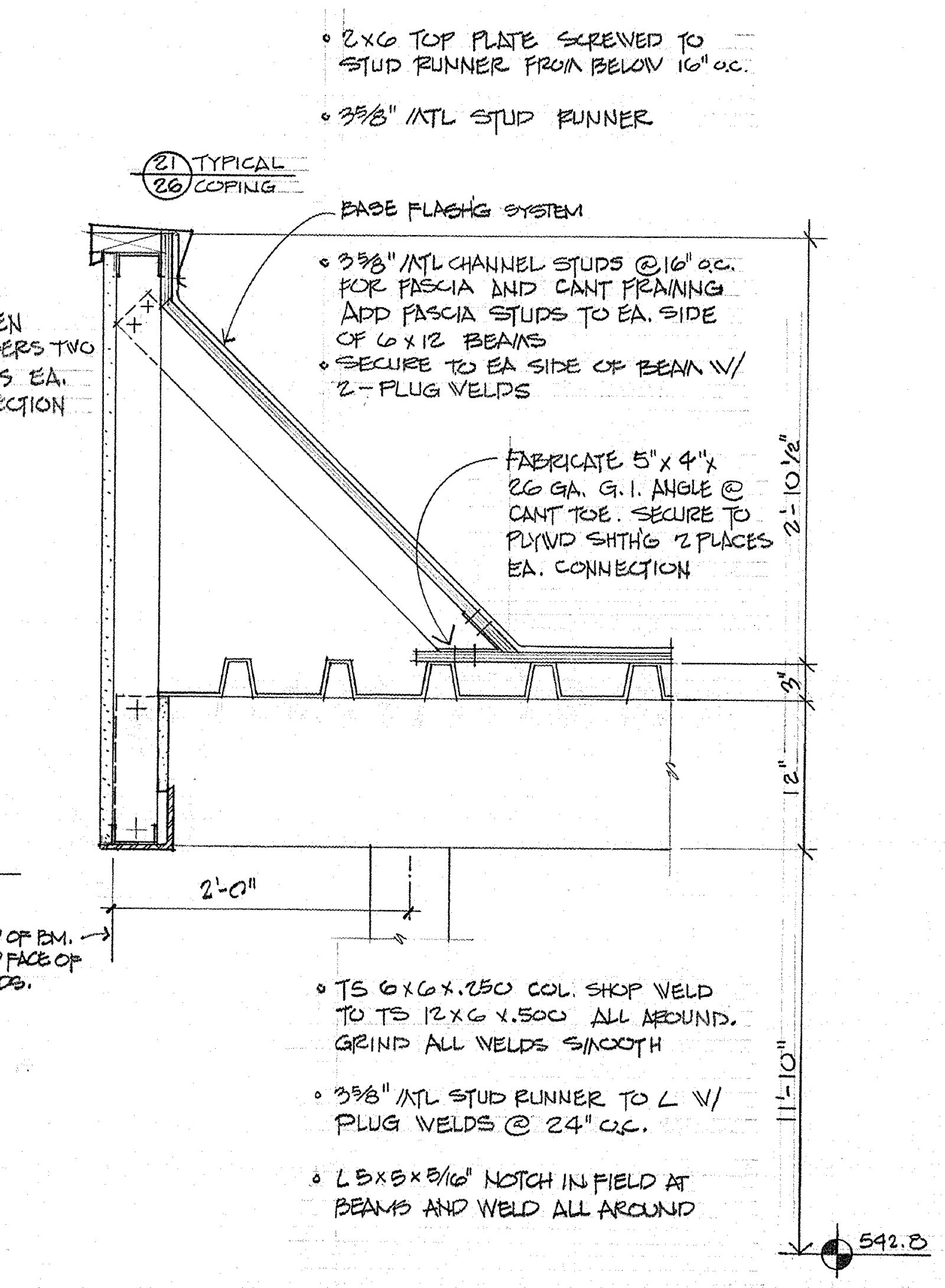
• 2x6 TOP PLATE SCREWED TO STUD RUNNER FROM BELOW 16" o.c.
• 3 5/8" MTL STUD RUNNER
21/26 TYPICAL COPING
BASE FLASH'G SYSTEM
• 3 5/8" MTL CHANNEL STUDS @ 16" o.c. FOR FASCIA AND CANT FRAMING ADD FASCIA STUDS TO EA. SIDE OF 6x12 BEAMS
• SECURE TO EA SIDE OF BEAM W/ 2-PLUG WELDS
• FASTEN MEMBERS TWO PLACES EA. CONNECTION
FABRICATE 5"x4"x 26 GA. G.I. ANGLE @ CANT TOE. SECURE TO PLYWD SHTH'G 2 PLACES EA. CONNECTION
2'-10 1/2"
3"
12"
2'-0"
END OF BM. AND FACE OF STUDS.
11'-10"
• TS 6x6x.250 COL. SHOP WELD TO TS 12x6x.500 ALL AROUND. GRIND ALL WELDS SMOOTH
• 3 5/8" MTL STUD RUNNER TO L W/ PLUG WELDS @ 24" o.c.
• L5x5x5/16" NOTCH IN FIELD AT BEAMS AND WELD ALL AROUND
542.8

13/7 HIGH ARCADE FASCIA @ BUS LOADING AREA
1"=1'-0"

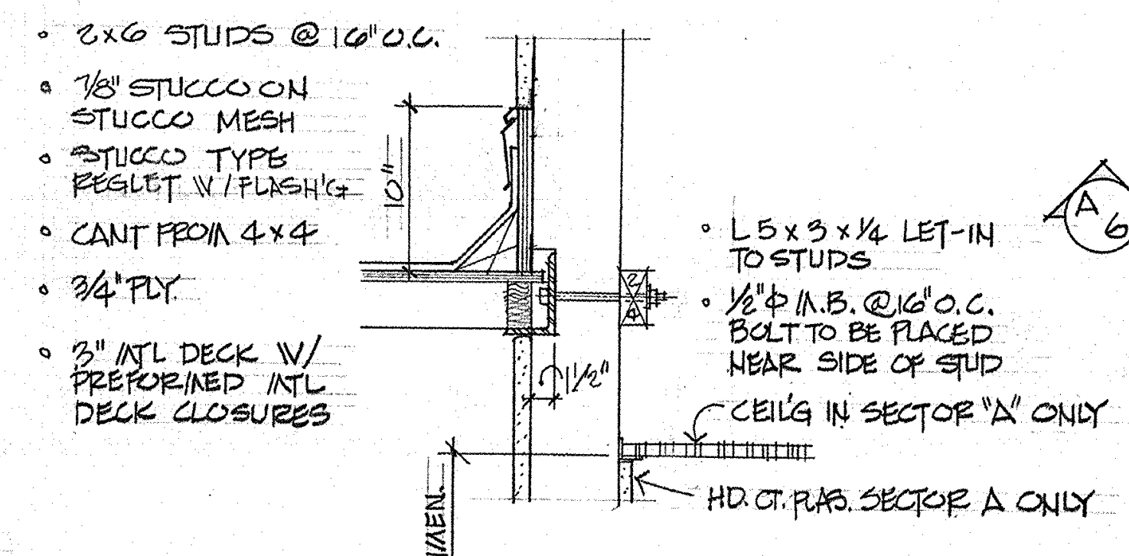
• 2x6 STUDS @ 16" o.c.
• 7/8" STUCCO ON STUCCO MESH
• STUCCO TYPE REGLET W/FLASH'G
10"
• CANT FROM 4x4
• 3/4" PLY
• 3" MTL DECK W/ PREFORMED MTL DECK CLOSURES
1 1/2"
• L5x3x1/4 LET-IN TO STUDS
• 1/2"Φ M.B. @ 16" o.c. BOLT TO BE PLACED NEAR SIDE OF STUD
CEIL'G IN SECTOR "A" ONLY
HD. CT. PLAS. SECTOR A ONLY
DIMEN.

14/7 ARCADE DECK'G CONNECTION @ STUD WALL
1"=1'-0"

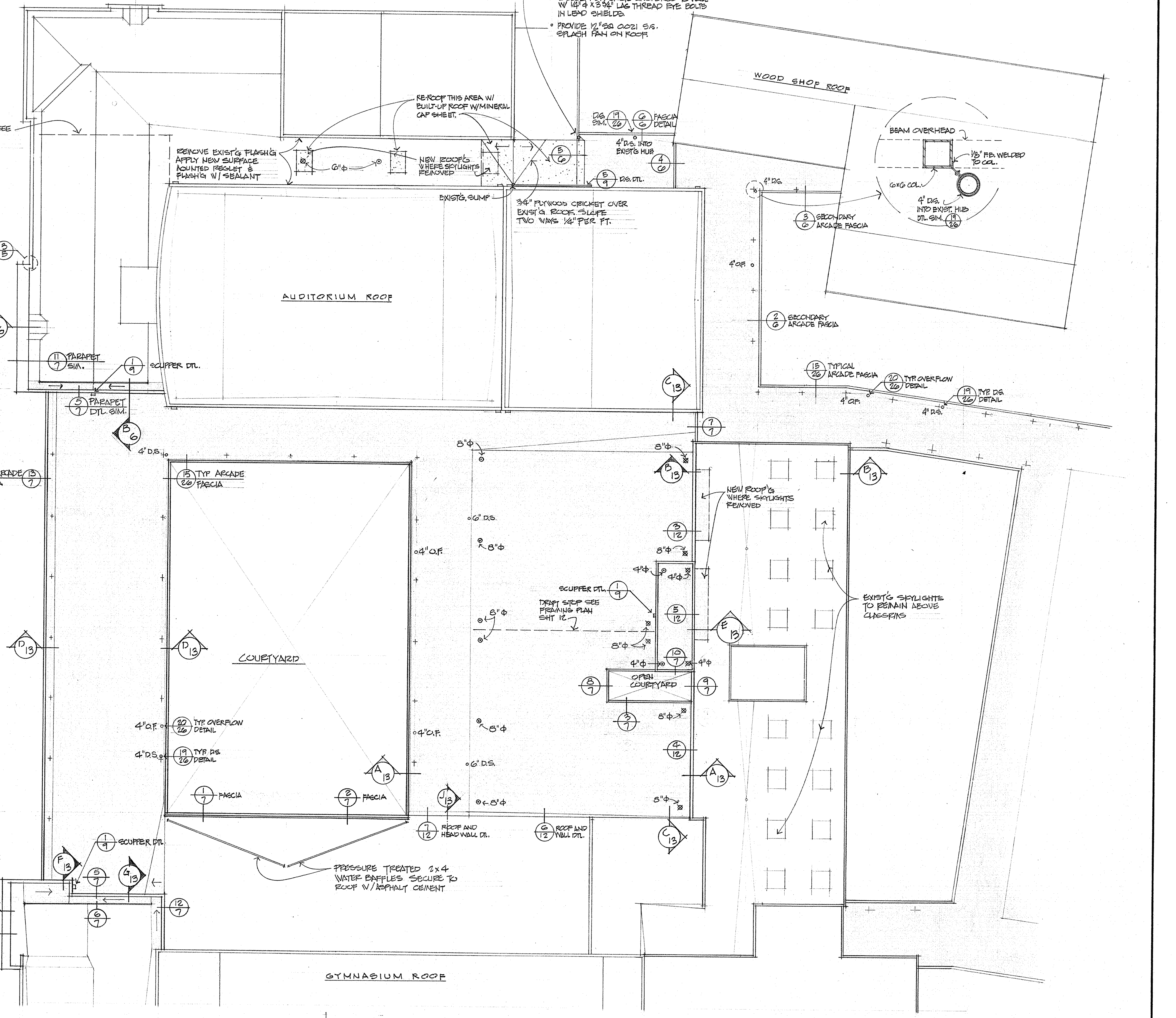
DRAFT STOP. SEE FRAMING PLAN SHT A-5
REMOVE EXIST'G FLASH'G APPLY NEW SURFACE MOUNTED REGLET & FLASH'G W/ SEALANT
6"Φ
RE-ROOF THIS AREA W/ BUILT-UP ROOF W/MINERAL CAP SHEET.
NEW ROOF'G WHERE SKYLIGHTS REMOVED
EXIST'G SUMP
3/4" PLYWOOD CRICKET OVER EXIST'G ROOF. SLOPE TWO WAYS 1/4" PER FT.
• 4"Φ SCHEDULE 40 P.V.C. D.S. SUPPLIED BY MECH AND INSTALLED BY GEN. CONTR. AT EXIST. DROP IN GUTTER ALONG LAUNDRY RM. WALL. PROVIDE 45° ELBOW AT BTM. OF D.S.
• 2 ELCEN BRACKETS ANCHORED TO WALL W/ 1/4"Φ x 3 3/4" LAG THREAD EYE BOLTS IN LEAD SHIELDS.
• PROVIDE 12" SQ 0.021 S.S. SPLASH PAN ON ROOF.
D.S. SIM. 19/26
6/6 FASCIA DETAIL
4" D.S. INTO EXIST'G HUB
5/6
4/6
5/9 D.S. DTL.
WOOD SHOP ROOF
BEAM OVERHEAD
1/8" F.B. WELDED TO COL.
6x6 COL.
4" D.S. INTO EXIST. HUB DTL. SIM. 19/26
4" D.S.
3/6 SECONDARY ARCADE FASCIA
4" O.F.
2/6 SECONDARY ARCADE FASCIA
15/26 TYPICAL ARCADE FASCIA
20/26 TYP. OVERFLOW DETAIL
19/26 TYP. D.S. DETAIL
4" O.F.
4" D.S.
AUDITORIUM ROOF
PLAN DTL. @ EXIST. SCUPPER 13/5
A/6
11/7 PARAPET SIM.
1/9 SCUPPER DTL.
5/7 PARAPET DTL. SIM.
B/6
C/13
7/7
4" D.S.
HIGH ARCADE FASCIA 13/7
15/26 TYP ARCADE FASCIA
8"Φ
B/13
NEW ROOF'G WHERE SKYLIGHTS REMOVED
6" D.S.
4" O.F.
3/12
SCUPPER DTL. 1/9
DRAFT STOP SEE FRAMING PLAN SHT 12
4"Φ
5/12
E/13
D/13
COURTYARD
10/7
OPEN COURTYARD
8/7
9/7
3/7
4/12
EXIST'G SKYLIGHTS TO REMAIN ABOVE CLASSRMS
20/26 TYP. OVERFLOW DETAIL
19/26 TYP. D.S. DETAIL
A/13
1/7 FASCIA
2/7 FASCIA
J/13
7/12 ROOF AND HEAD WALL DTL.
6/12 ROOF AND WALL DTL.
F/13
1/9 SCUPPER DTL.
5/7
G/13
6/7
12/7
H/13
11/7
PRESSURE TREATED 2x4 WATER BAFFLES SECURE TO ROOF W/ASPHALT CEMENT
GYMNASIUM ROOF

ROOF PLAN
SECTORS A & B
1/16"=1'-0"

⊗ ROOF EXHAUSTER
⊙ ROOF JACK

N

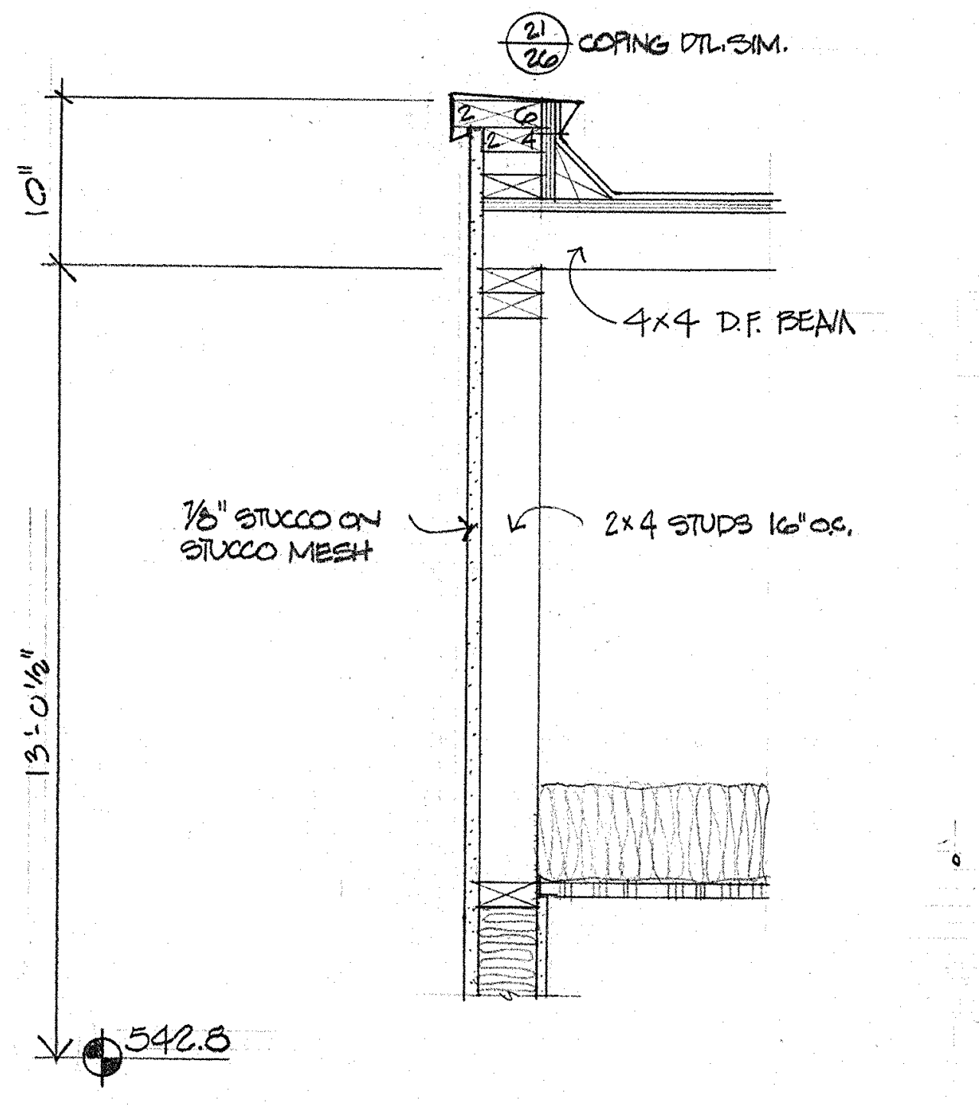
21/26 COPING DTL. SIM.
10"
4x4 D.F. BEAM
7/8" STUCCO ON STUCCO MESH
2x4 STUDS 16" o.c.
13'-0 1/8"
542.8

8/7 FASCIA NORTH WALL SMALL COURTYARD
1"=1'-0"

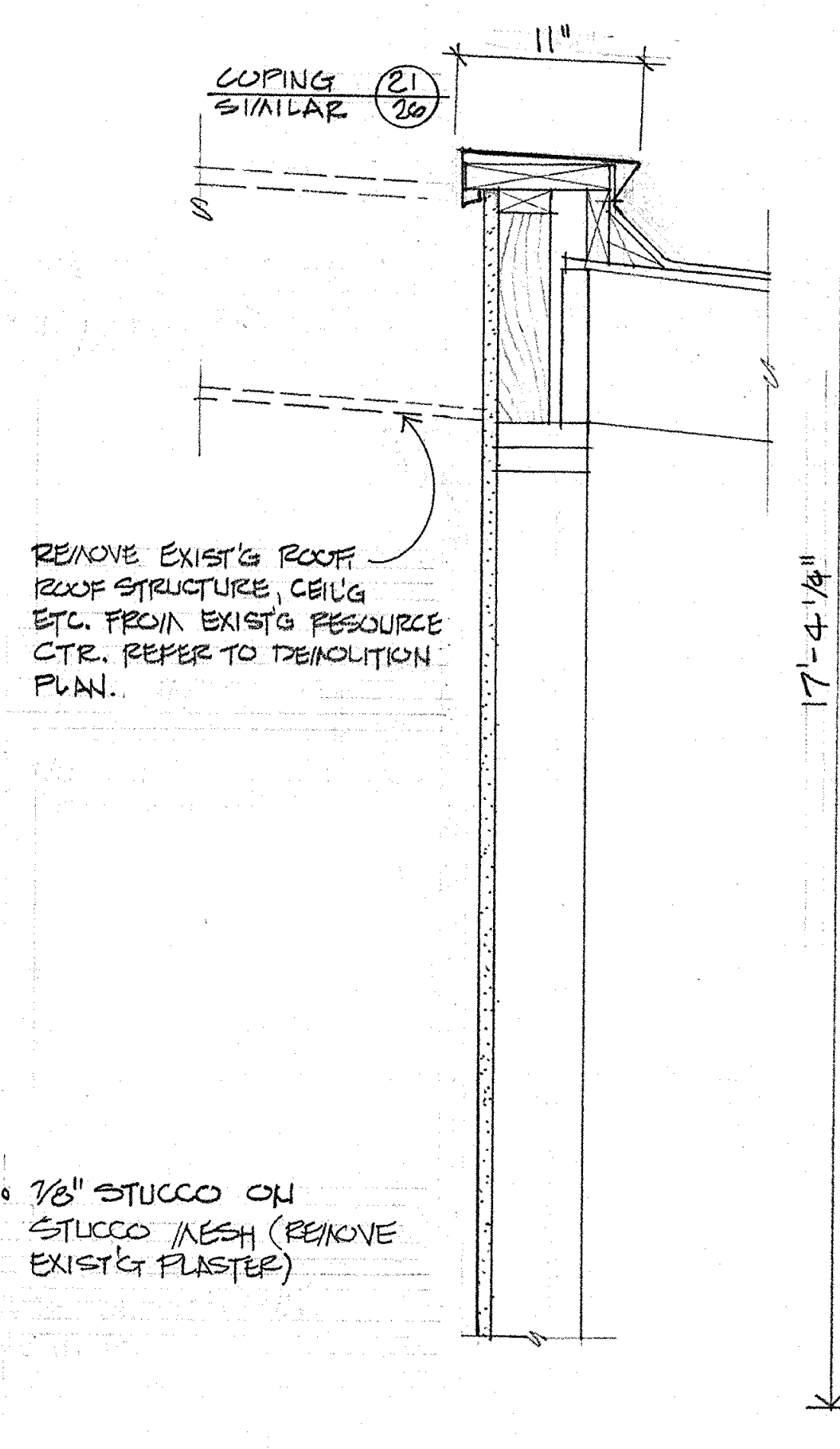
COPING SIMILAR 21/26
11"
REMOVE EXIST'G ROOF ROOF STRUCTURE, CEIL'G ETC. FROM EXIST'G RESOURCE CTR. REFER TO DEMOLITION PLAN.
• 7/8" STUCCO ON STUCCO MESH (REMOVE EXIST'G PLASTER)

9/7 FASCIA SOUTH WALL SMALL COURTYARD
1"=1'-0"

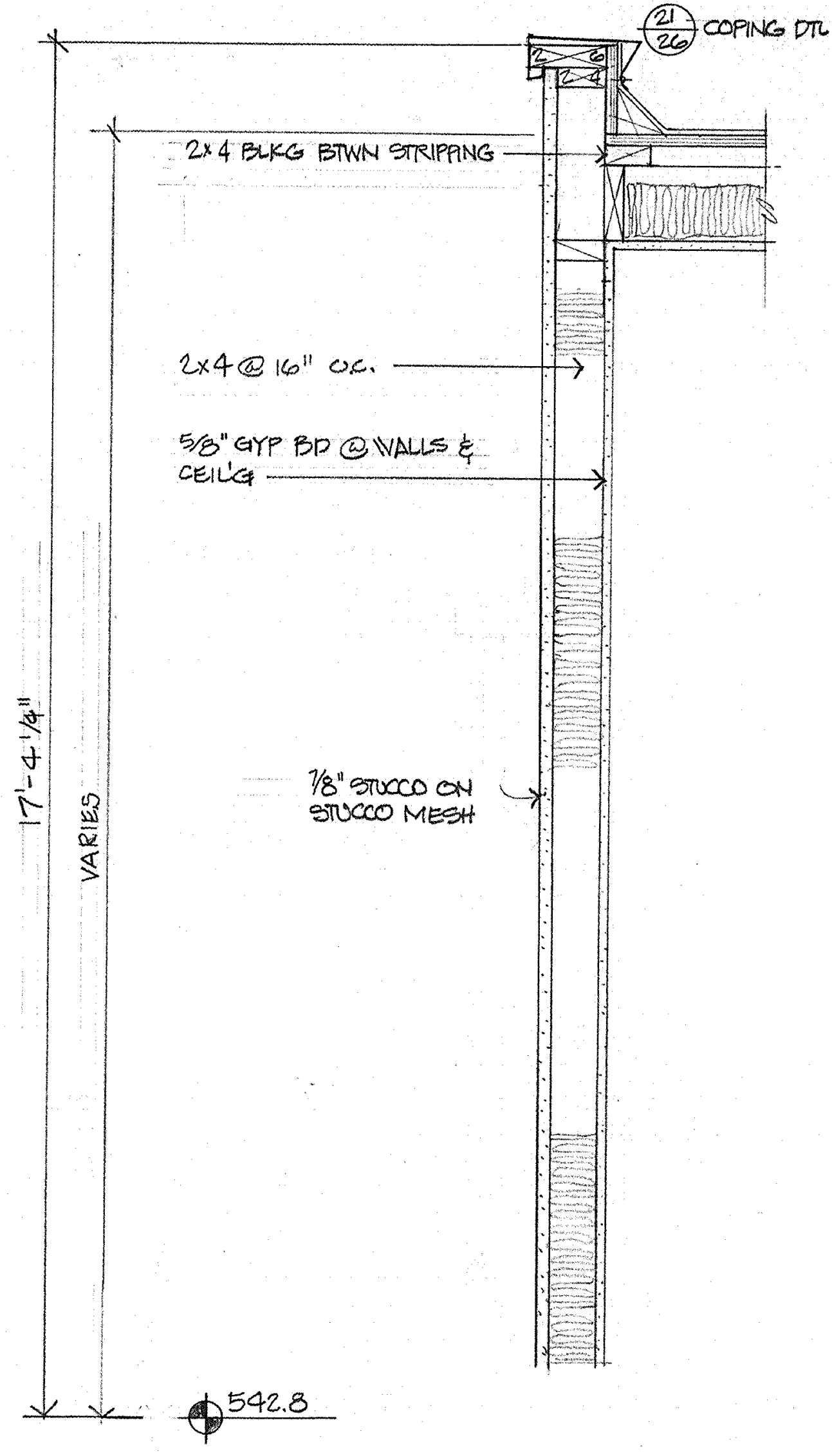
21/26 COPING DTL. SIM.
2x4 BLKG BTWN STRIPPING
2x4 @ 16" o.c.
5/8" GYP BD @ WALLS & CEIL'G
7/8" STUCCO ON STUCCO MESH
17'-4 1/4"
VARIES
542.8

10/7 FASCIA @ MECH. RM. SMALL COURTYARD
1"=1'-0"

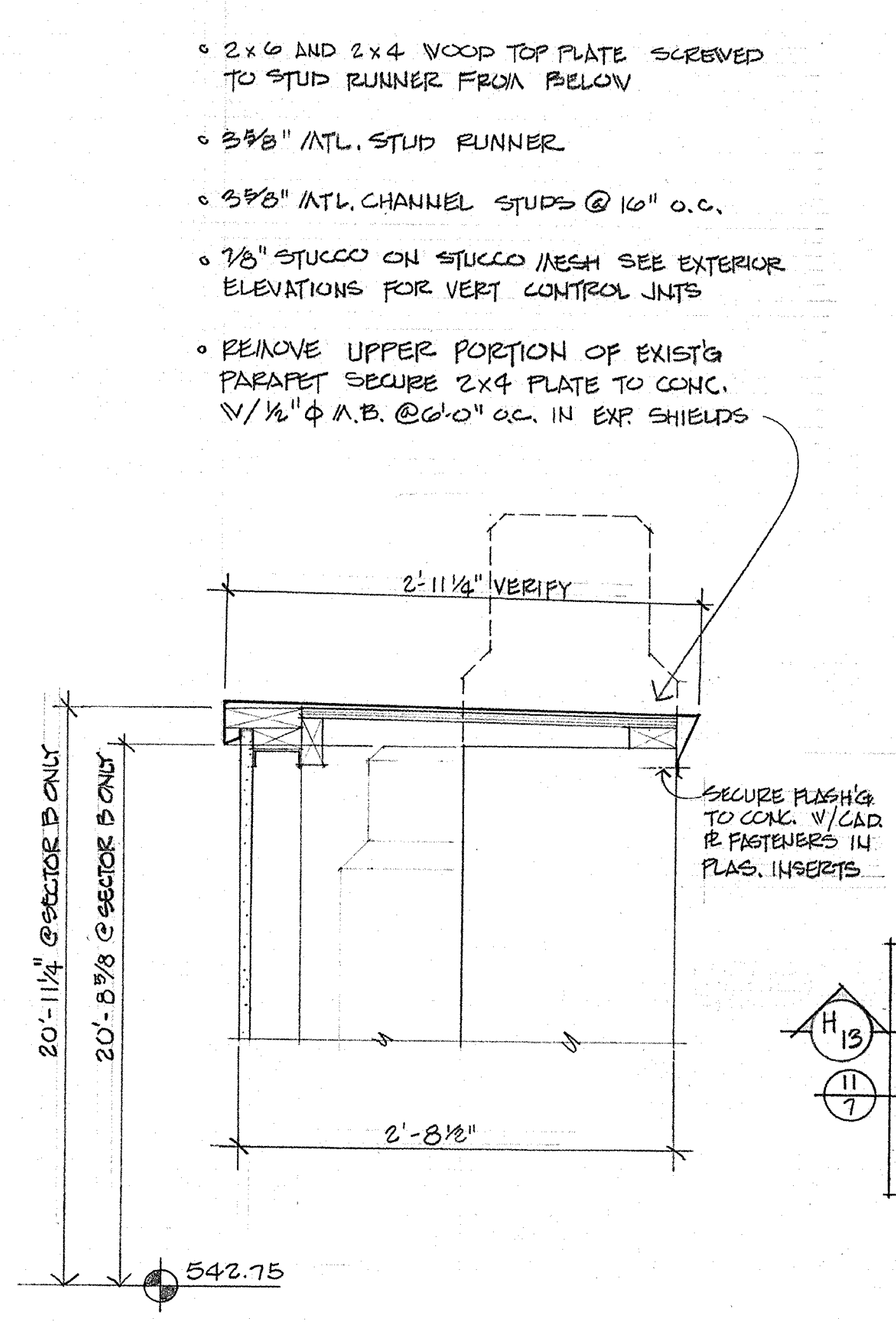
• 2x6 AND 2x4 WOOD TOP PLATE SCREWED TO STUD RUNNER FROM BELOW
• 3 5/8" MTL. STUD RUNNER
• 3 5/8" MTL. CHANNEL STUDS @ 16" o.c.
• 7/8" STUCCO ON STUCCO MESH SEE EXTERIOR ELEVATIONS FOR VERT CONTROL JNTS
• REMOVE UPPER PORTION OF EXIST'G PARAPET SECURE 2x4 PLATE TO CONC. W/ 1/2"Φ M.B. @ 6'-0" o.c. IN EXP. SHIELDS
2'-11 1/4" VERIFY
SECURE FLASH'G TO CONC. W/CAD. PL FASTENERS IN PLAS. INSERTS
20'-11 1/4" @ SECTOR B ONLY
20'-8 3/8" @ SECTOR B ONLY
2'-8 1/2"
542.75

11/7 COPING @ EXIST'G ENTRY CLOSURE
1"=1'-0"

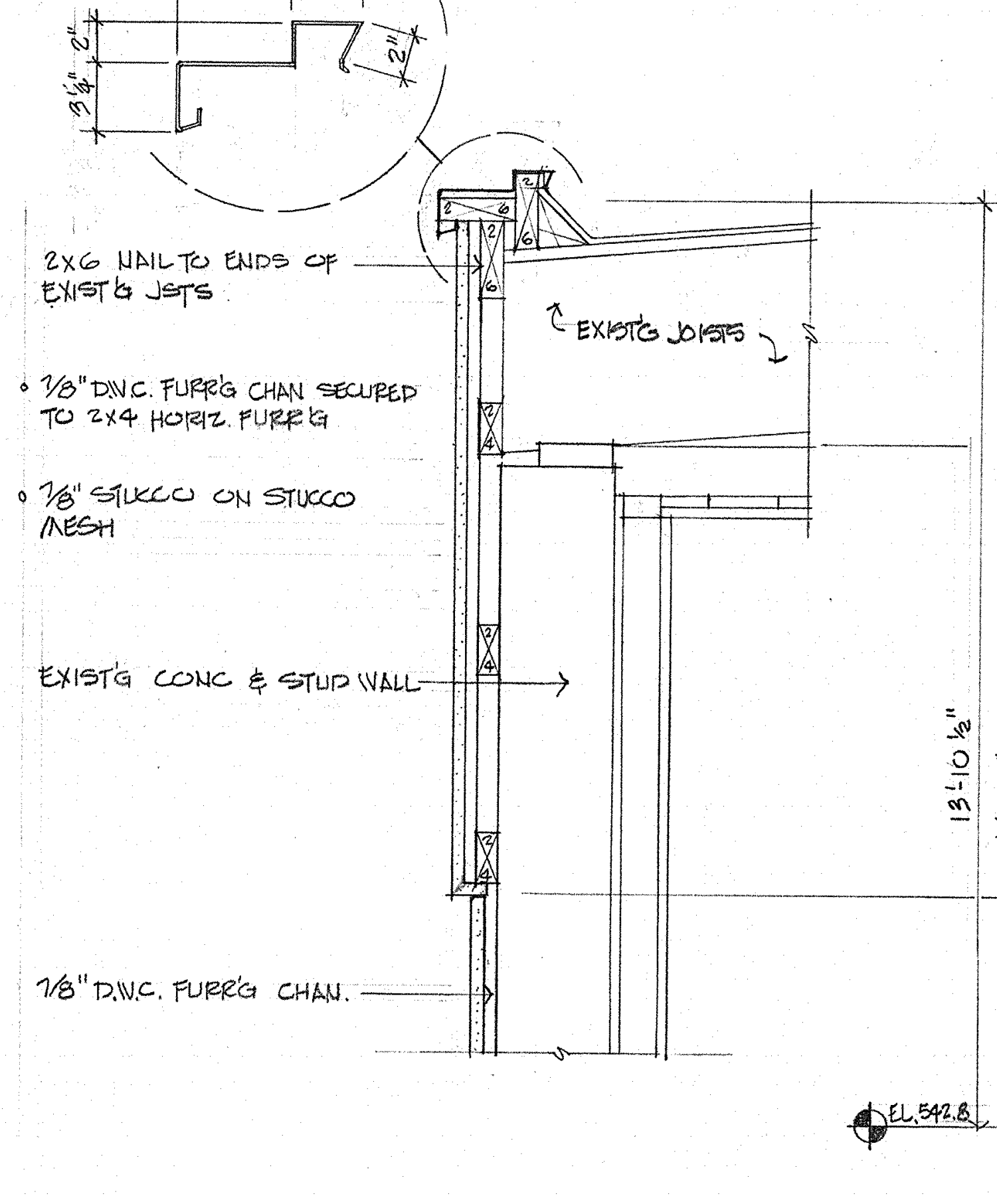
5 1/2"
3 1/2"
2"
3 1/4"
2"
2x6 NAIL TO ENDS OF EXIST'G JSTS
EXIST'G JOISTS
• 7/8" D.W.C. FURR'G CHAN SECURED TO 2x4 HORIZ. FURR'G
• 7/8" STUCCO ON STUCCO MESH
EXIST'G CONC & STUD WALL
7/8" D.W.C. FURR'G CHAN.

1/7 FASCIA WEST WALL COURTYARD (CONC. WALL)
1"=1'-0"

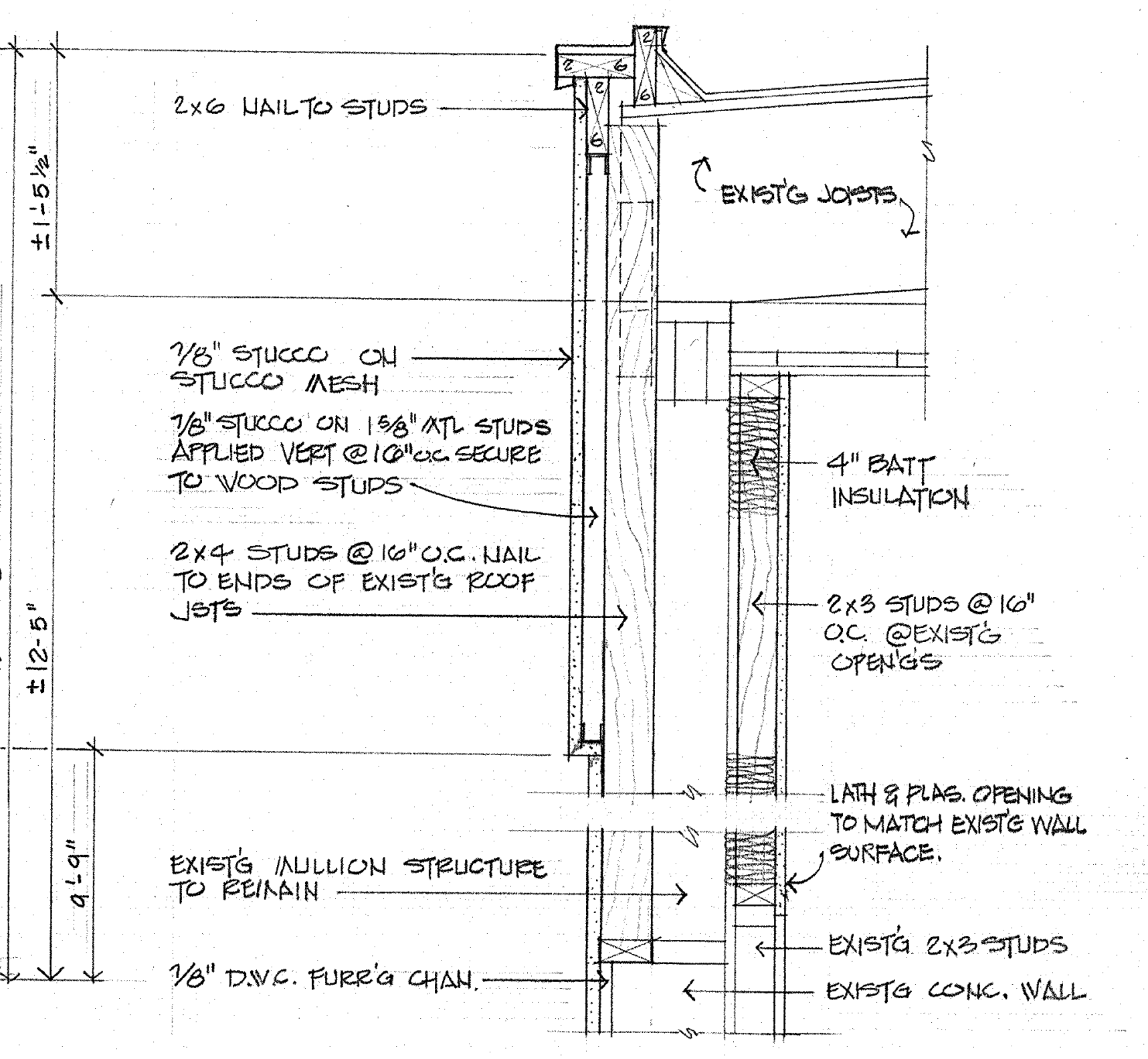
±1'-5 1/2"
13'-10 1/2"
±12-5"
9'-9"
EL. 542.8
2x6 NAIL TO STUDS
EXIST'G JOISTS
7/8" STUCCO ON STUCCO MESH
7/8" STUCCO ON 1 5/8" MTL STUDS APPLIED VERT @ 16" o.c. SECURE TO WOOD STUDS
2x4 STUDS @ 16" o.c. NAIL TO ENDS OF EXIST'G ROOF JSTS
4" BATT INSULATION
2x3 STUDS @ 16" o.c. @ EXIST'G OPEN'GS
LATH & PLAS. OPENING TO MATCH EXIST'G WALL SURFACE.
EXIST'G MULLION STRUCTURE TO REMAIN
EXIST'G 2x3 STUDS
7/8" D.W.C. FURR'G CHAN.
EXIST'G CONC. WALL

2/7 FASCIA WEST WALL COURTYARD (FRAME WALL INFILL)
1"=1'-0"

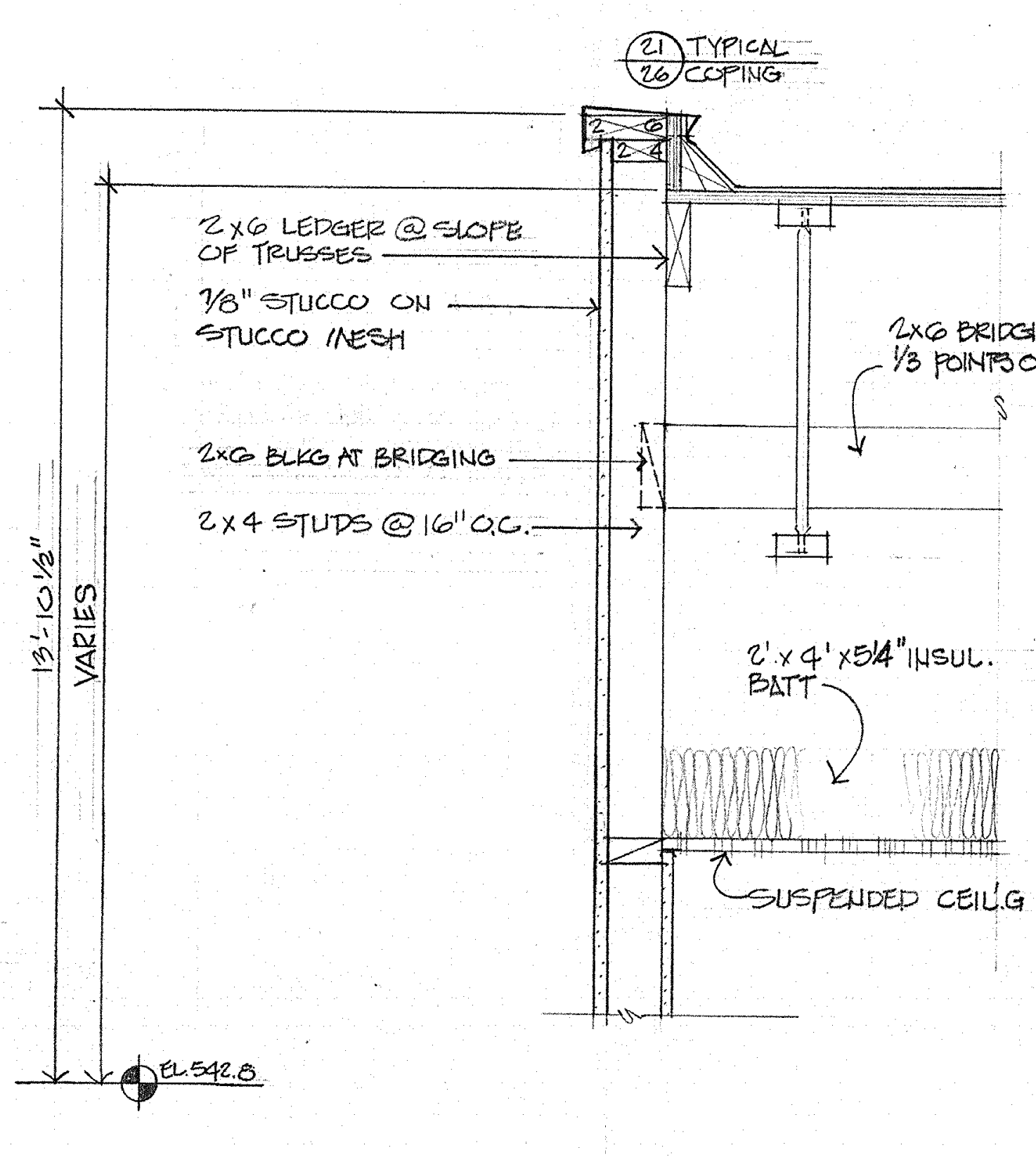
21/26 TYPICAL COPING
2x6 LEDGER @ SLOPE OF TRUSSES
7/8" STUCCO ON STUCCO MESH
2x6 BRIDGING @ 1/3 POINTS OF TRUSSES
2x6 BLKG AT BRIDGING
2x4 STUDS @ 16" o.c.
13'-10 1/2"
VARIES
2'x4'x5 1/4" INSUL. BATT
SUSPENDED CEIL'G
EL. 542.8

3/7 FASCIA @ SMALL COURTYARD
1"=1'-0"

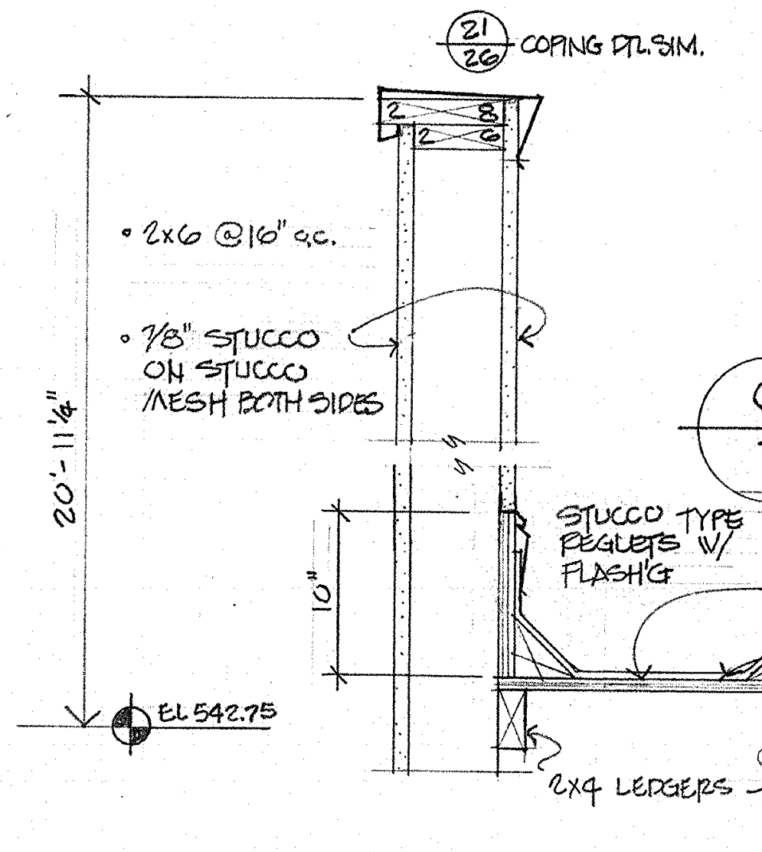
21/26 COPING DTL. SIM.
• 2x6 @ 16" o.c.
• 7/8" STUCCO ON STUCCO MESH BOTH SIDES
20'-11 1/4"
10"
STUCCO TYPE REGLETS W/ FLASH'G
EL 542.75

5/7 PARAPET WALL @ MAIN ENTRIES
1"=1'-0"

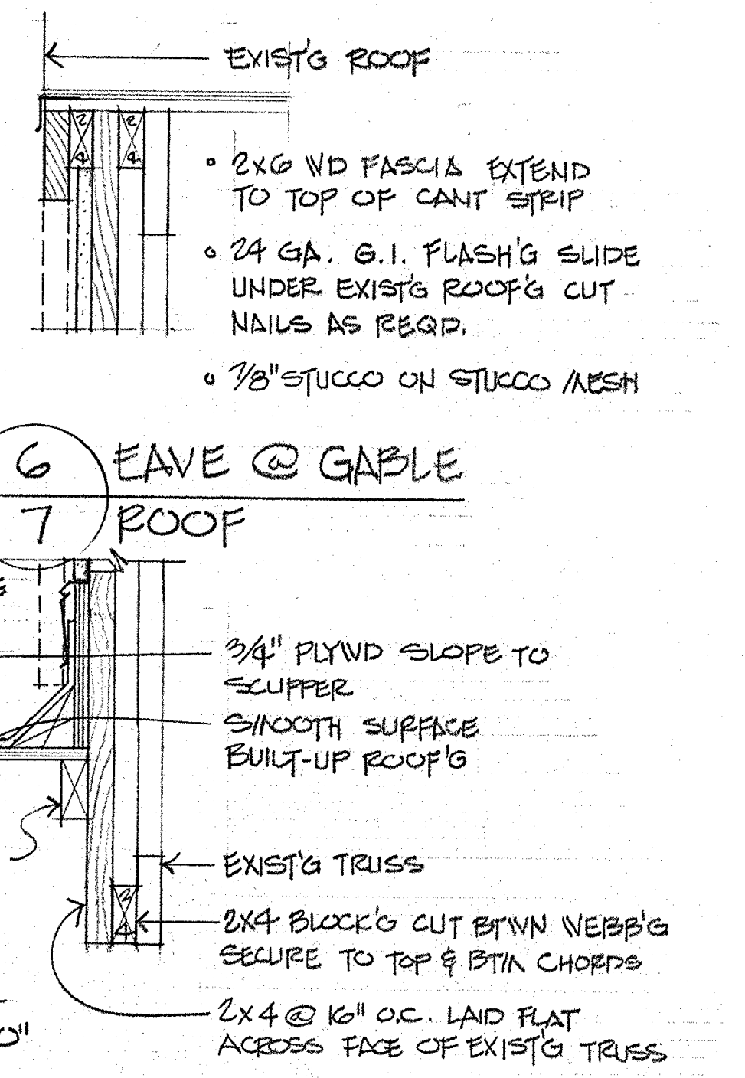
EXIST'G ROOF
• 2x6 WD FASCIA EXTEND TO TOP OF CANT STRIP
• 24 GA. G.I. FLASH'G SLIDE UNDER EXIST'G ROOF'G CUT NAILS AS REQD.
• 7/8" STUCCO ON STUCCO MESH
3/4" PLYWD SLOPE TO SCUPPER
SMOOTH SURFACE BUILT-UP ROOF'G
2x4 LEDGERS
EXIST'G TRUSS
2x4 BLOCK'G CUT BTWN WEBB'G SECURE TO TOP & BTM CHORDS
2x4 @ 16" o.c. LAID FLAT ACROSS FACE OF EXIST'G TRUSS

6/7 EAVE @ GABLE ROOF

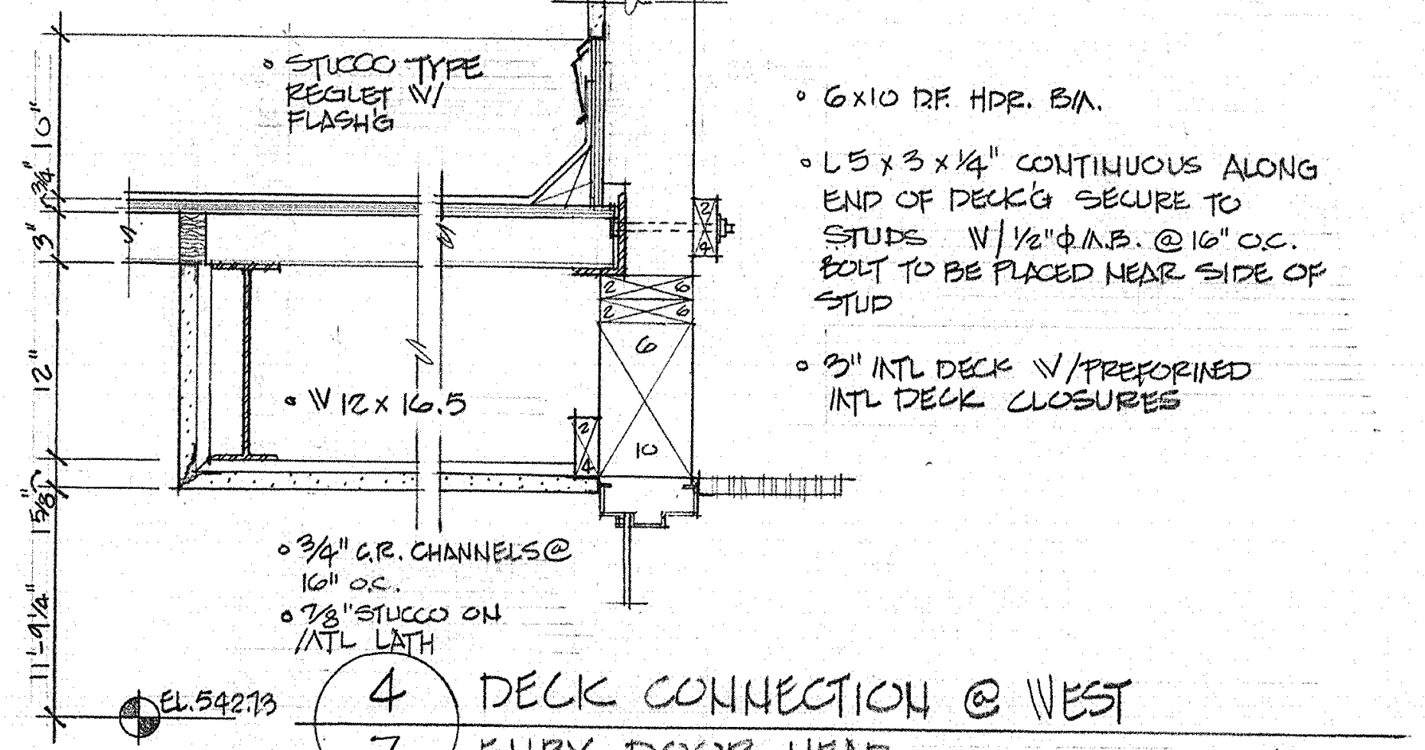
• STUCCO TYPE REGLET W/ FLASH'G
• 6x10 D.F. HDR. BM.
• L5x3x1/4" CONTINUOUS ALONG END OF DECK'G SECURE TO STUDS W/ 1/2"Φ M.B. @ 16" o.c. BOLT TO BE PLACED NEAR SIDE OF STUD
• 3" MTL DECK W/PREFORMED MTL DECK CLOSURES
• W12x16.5
• 3/4" C.R. CHANNELS @ 16" o.c.
• 7/8" STUCCO ON MTL LATH
10"
3 3/4"
3"
12"
1 5/8"
11'-9 1/4"
EL. 542.73

4/7 DECK CONNECTION @ WEST ENTRY DOOR HEAD
1"=1'-0"

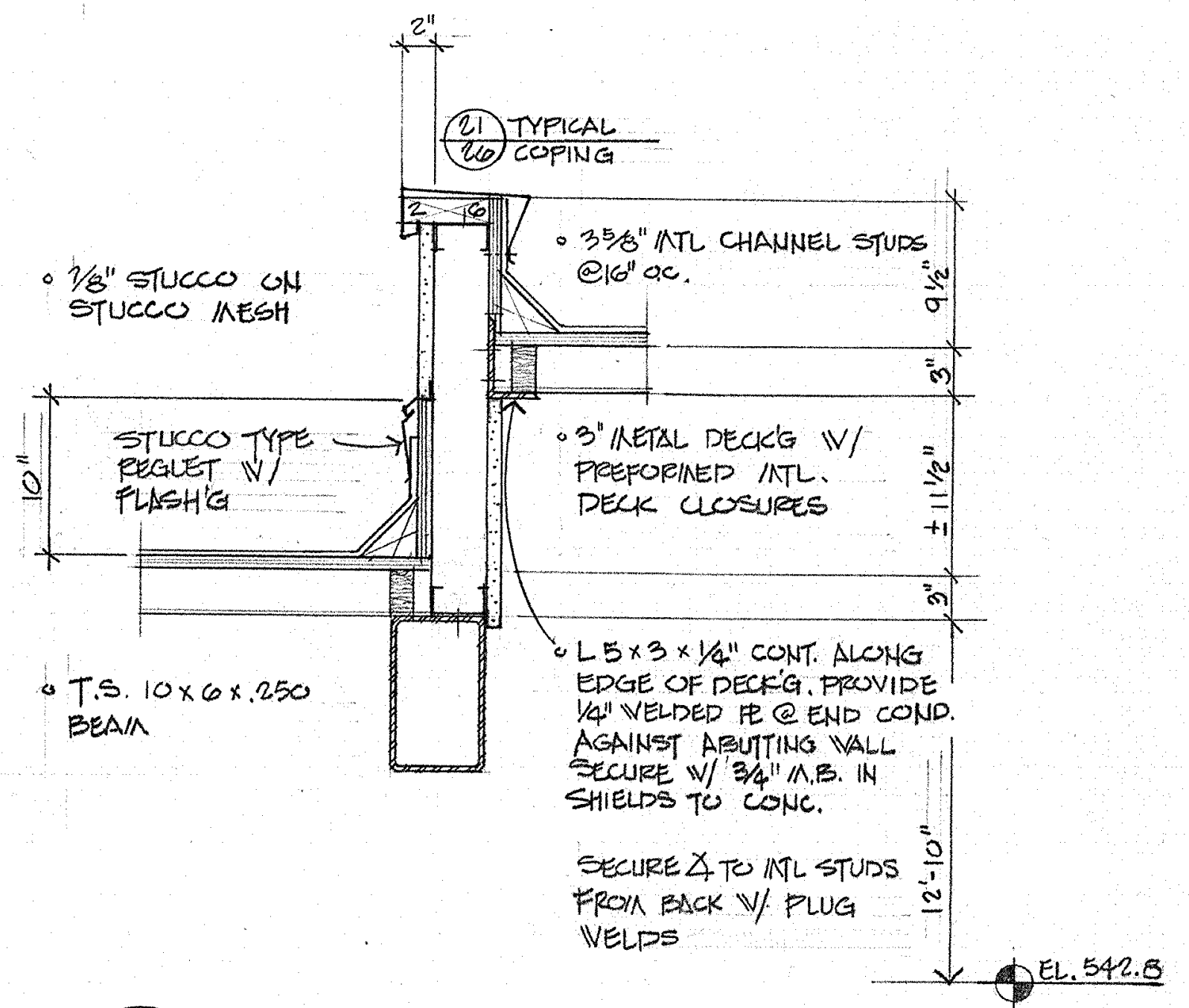
2"
21/26 TYPICAL COPING
• 7/8" STUCCO ON STUCCO MESH
• 3 5/8" MTL CHANNEL STUDS @ 16" o.c.
9 1/2"
3"
STUCCO TYPE REGLET W/ FLASH'G
10"
• 3" METAL DECK'G W/ PREFORMED MTL. DECK CLOSURES
±11 1/2"
3"
• T.S. 10x6x.250 BEAM
• L5x3x1/4" CONT. ALONG EDGE OF DECK'G. PROVIDE 1/4" WELDED PL @ END COND. AGAINST ABUTTING WALL SECURE W/ 3/4" M.B. IN SHIELDS TO CONC.
SECURE L TO MTL STUDS FROM BACK W/ PLUG WELDS
12'-10"
EL. 542.8

7/7 ELEV. TRANSITION @ ARCADE DECK'G
1"=1'-0"

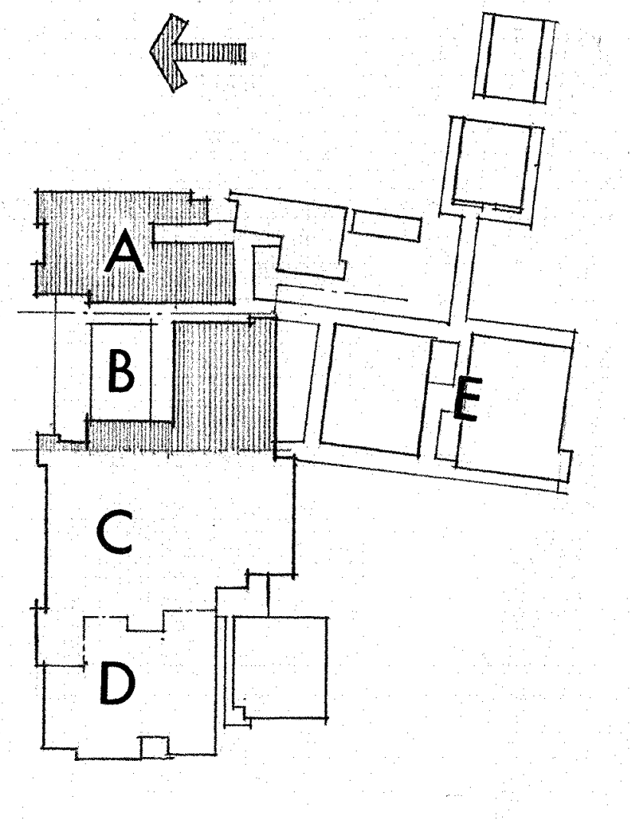

ROOF PLAN, DETAILS - SECTORS A & B

SWEET HOME HIGH SCHOOL
ADDITIONS AND ALTERATIONS 1974
DISTRICT 55 LINN COUNTY, OREGON

ARCHITECTS
HAMLIN, MARTIN, SCHULTZ & GEYER
AIA
159 W. 12TH EUGENE, OREGON 97401

A
7
JOB NO.

REGISTERED ARCHITECT
CLARE K. HAMLIN
Clare K Hamlin
EUGENE, OREGON
STATE OF OREGON

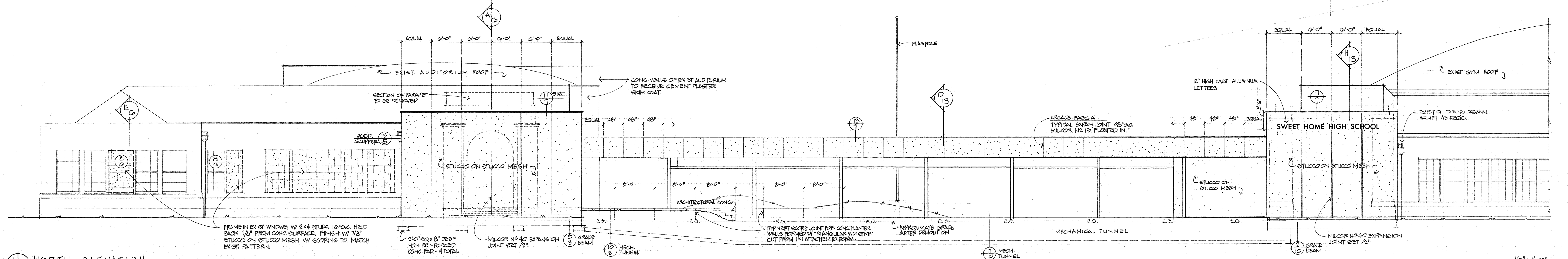
EQUAL
6'-0"
6'-0"
6'-0"
6'-0"
EQUAL
A 6
EXIST. AUDITORIUM ROOF
CONC. WALLS OF EXIST AUDITORIUM TO RECEIVE CEMENT PLASTER SKIM COAT.
SECTION OF PARAPET TO BE REMOVED
11 7 SIM
E 6
MODIF. SCUPPER 13 5
8 6
STUCCO ON STUCCO MESH
EQUAL 48" 48" 48"
8'-0"
ARCHITECTURAL CONC.
FRAME IN EXIST. WNDWS. W/ 2×4 STUDS 16"O.C. HELD BACK 7/8" FROM CONC. SURFACE. FINISH W/ 7/8" STUCCO ON STUCCO MESH W/ SCORING TO MATCH EXIST. PATTERN.
2'-0"SQ×8" DEEP NON REINFORCED CONC. PAD - 4 TOTAL
MILCOR Nº 40 EXPANSION JOINT SET 1/2".
8 3 GRADE BEAM
10 3 MECH. TUNNEL
TYP. VERT SCORE JOINT FOR CONC. PLANTER WALLS FORMED W/ TRIANGULAR WD. STRIP CUT FROM 1× LATTACHED TO FORM.
FLAGPOLE
13 7
D 13
ARCADE FASCIA
TYPICAL EXPAN. JOINT 48" O.C. MILCOR Nº 15 "FLOATED IN."
APPROXIMATE GRADE AFTER DEMOLITION
E.G.
MECHANICAL TUNNEL
17 10 MECH. TUNNEL
STUCCO ON STUCCO MESH
48" 48" 48" EQUAL
3'-6"
12" HIGH CAST ALUMINUM LETTERS
H 13
11 7
SWEET HOME HIGH SCHOOL
EXIST. GYM ROOF
EXIST'G. D.S. TO REMAIN MODIFY AS REQ'D.
MILCOR Nº 40 EXPANSION JOINT SET 1/2"
2 10 GRADE BEAM

1/8 NORTH ELEVATION
SECTORS - A & B
1/8" = 1'-0"

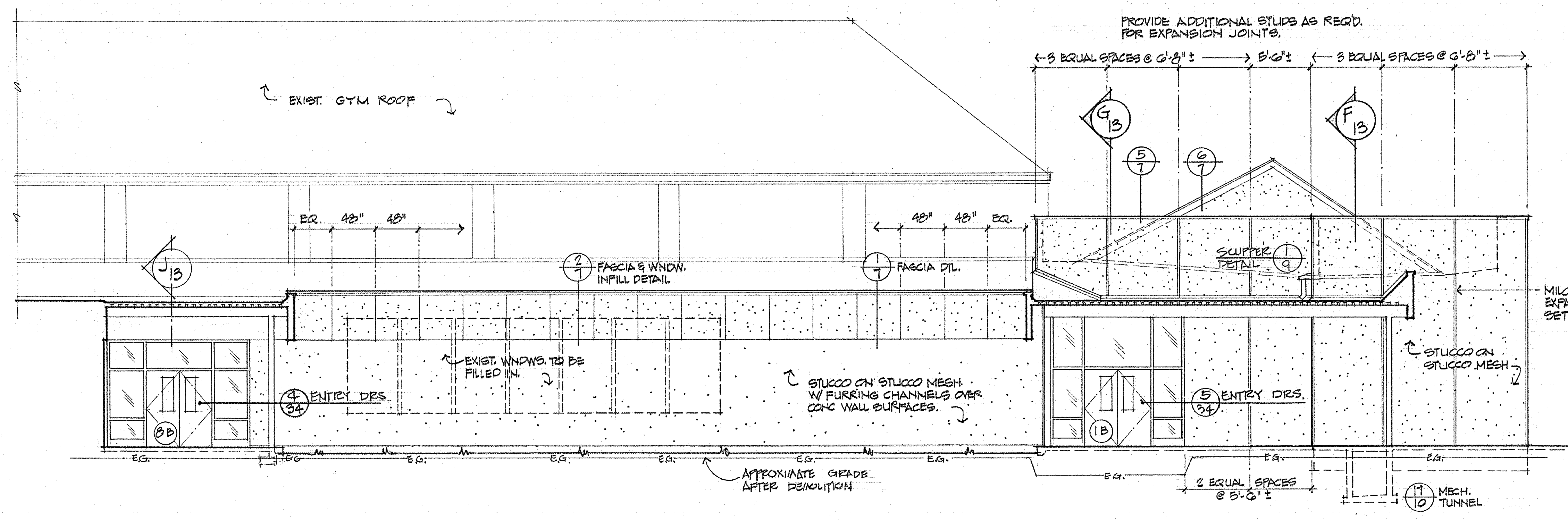
PROVIDE ADDITIONAL STUDS AS REQ'D. FOR EXPANSION JOINTS.
3 EQUAL SPACES @ 6'-8" ±
5'-6" ±
3 EQUAL SPACES @ 6'-8" ±
EXIST. GYM ROOF
G 13
5 7
6 7
F 13
EQ. 48" 48"
48" 48" EQ.
J 13
2 7 FASCIA & WNDW. INFILL DETAIL
1 7 FASCIA DTL.
SCUPPER DETAIL 1 9
MILCOR Nº 40 EXPAN. JOINTS SET 1/2".
STUCCO ON STUCCO MESH
EXIST. WNDWS. TO BE FILLED IN.
STUCCO ON STUCCO MESH W/ FURRING CHANNELS OVER CONC. WALL SURFACES.
4 34 ENTRY DRS.
5 34 ENTRY DRS.
8B
1B
E.G.
APPROXIMATE GRADE AFTER DEMOLITION
2 EQUAL SPACES @ 5'-6" ±
17 10 MECH. TUNNEL

2/8 WEST ELEVATION AT COURTYARD
SECTOR - B
1/8" = 1'-0"

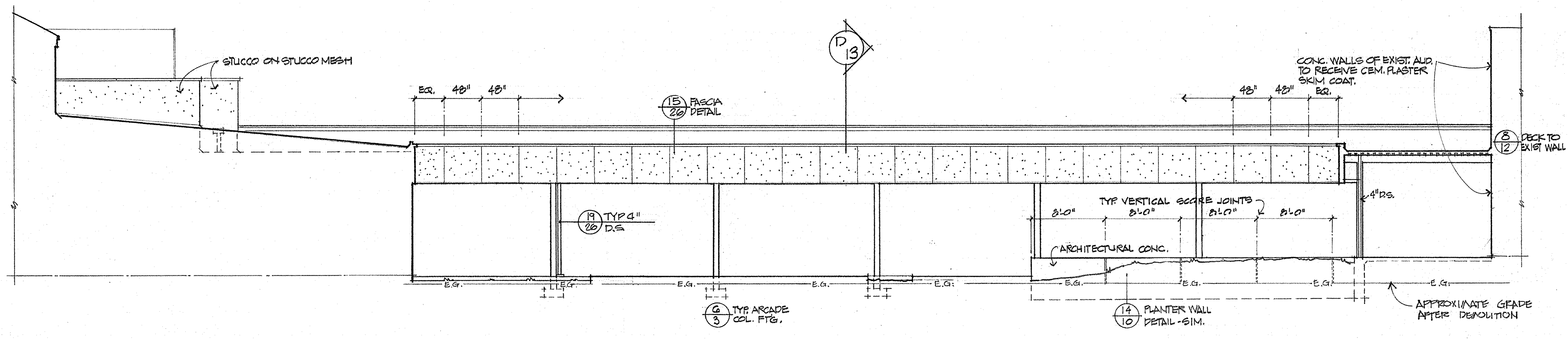
STUCCO ON STUCCO MESH
D 13
EQ. 48" 48"
15 26 FASCIA DETAIL
48" 48" EQ.
CONC. WALLS OF EXIST. AUD. TO RECEIVE CEM. PLASTER SKIM COAT.
8 12 DECK TO EXIST WALL
4" D.S.
19 26 TYP 4" D.S.
TYP. VERTICAL SCORE JOINTS
8'-0"
ARCHITECTURAL CONC.
E.G.
6 3 TYP. ARCADE COL. FTG.
14 10 PLANTER WALL DETAIL - SIM.
APPROXIMATE GRADE AFTER DEMOLITION

3/8 NORTH ELEVATION AT COURTYARD
SECTOR B
1/8" = 1'-0"

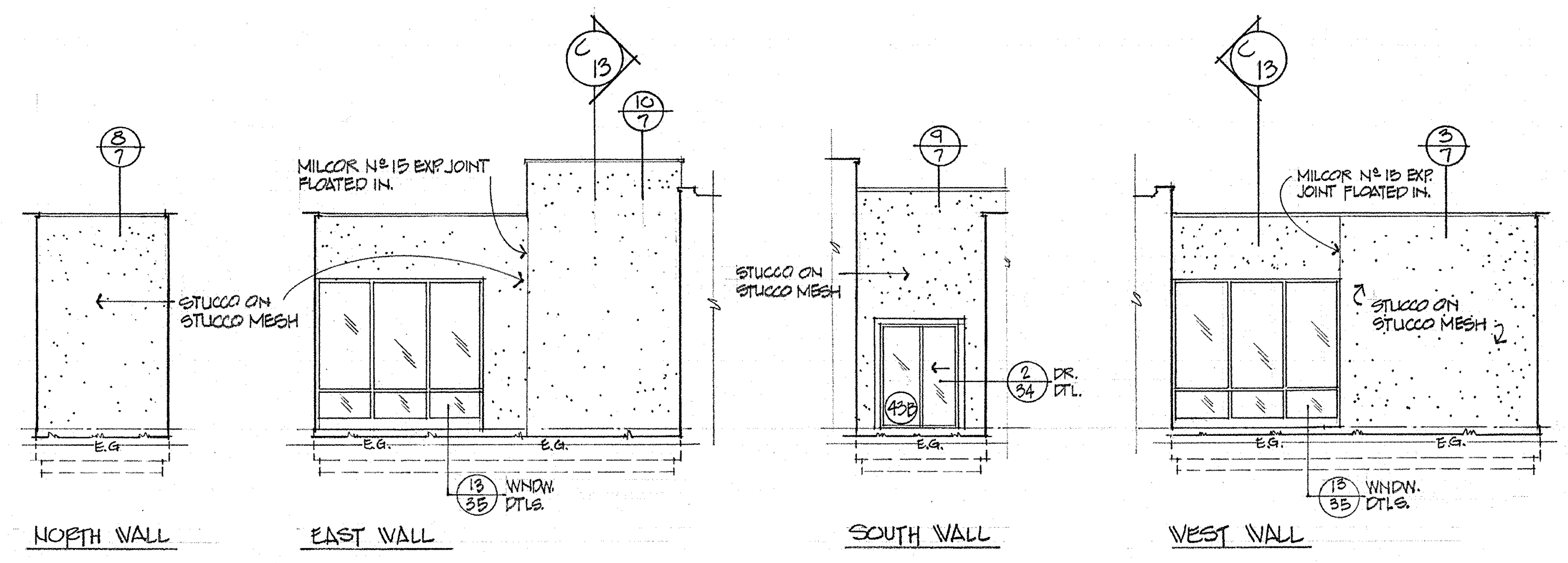
8 7
C 13
10 7
MILCOR Nº 15 EXP. JOINT FLOATED IN.
STUCCO ON STUCCO MESH
9 7
STUCCO ON STUCCO MESH
2 34 DR. DTL.
43B
C 13
3 7
MILCOR Nº 15 EXP. JOINT FLOATED IN.
STUCCO ON STUCCO MESH
E.G.
13 35 WNDW. DTLS.

NORTH WALL
EAST WALL
SOUTH WALL
WEST WALL

4/8 ELEVATIONS AT SMALL COURTYARD
SECTOR - B
1/8" = 1'-0"

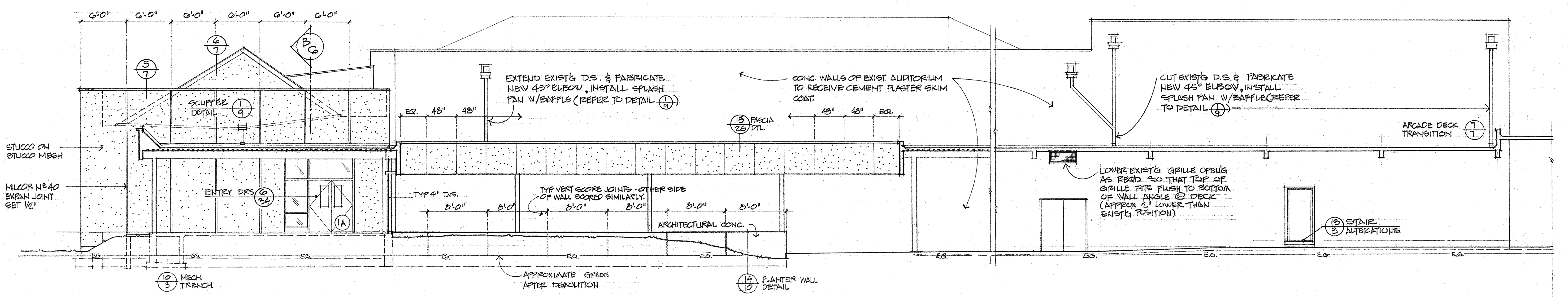
6'-0"
6'-0"
6'-0"
6'-0"
6'-0"
6'-0"
6 7
5 7
B 6
SCUPPER DETAIL 1 9
STUCCO ON STUCCO MESH
MILCOR Nº 40 EXPAN JOINT SET 1/2"
ENTRY DRS 6 34
1A
EXTEND EXIST'G D.S. & FABRICATE NEW 45° ELBOW, INSTALL SPLASH PAN W/BAFFLE (REFER TO DETAIL 1 9)
EQ. 48" 48"
15 26 FASCIA DTL.
48" 48" EQ.
CONC. WALLS OF EXIST. AUDITORIUM TO RECEIVE CEMENT PLASTER SKIM COAT.
TYP 4" D.S.
TYP VERT SCORE JOINTS - OTHER SIDE OF WALL SCORED SIMILARLY.
8'-0"
ARCHITECTURAL CONC.
CUT EXIST'G D.S. & FABRICATE NEW 45° ELBOW, INSTALL SPLASH PAN W/BAFFLE (REFER TO DETAIL 1 9)
ARCADE DECK TRANSITION 7 7
LOWER EXIST'G GRILLE OPEN'G AS REQ'D SO THAT TOP OF GRILLE FITS FLUSH TO BOTTOM OF WALL ANGLE @ DECK (APPROX 2" LOWER THAN EXIST'G POSITION)
13 3 STAIR ALTERATIONS
E.G.
10 3 MECH. TRENCH
APPROXIMATE GRADE AFTER DEMOLITION
14 10 PLANTER WALL DETAIL

5/8 EAST ELEVATION AT COURTYARD
SECTOR - A
1/8" = 1'-0"

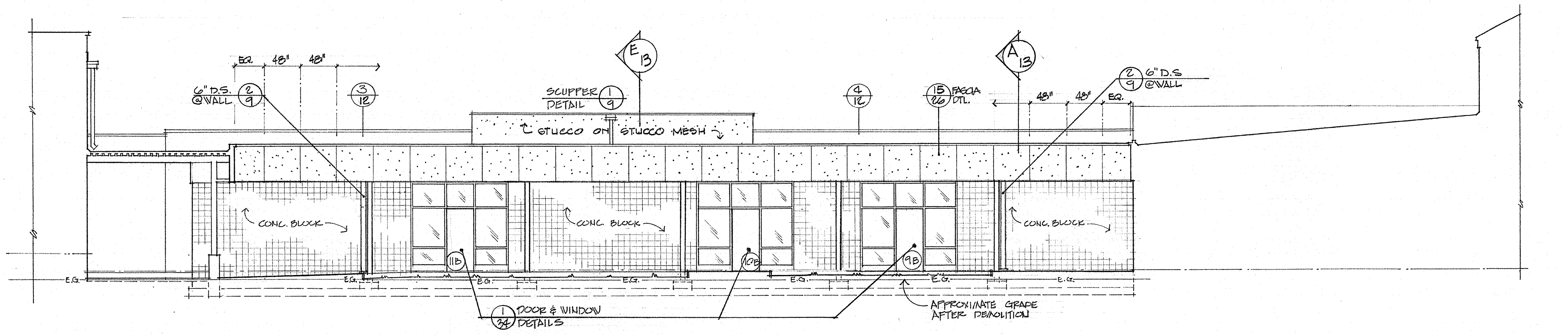
EQ. 48" 48"
6" D.S. @WALL 2 9
3 12
SCUPPER DETAIL 1 9
E 13
STUCCO ON STUCCO MESH
4 12
15 26 FASCIA DTL.
A 13
2 9 6" D.S. @WALL
48" 48" EQ.
CONC. BLOCK
11B
10B
9B
E.G.
1 34 DOOR & WINDOW DETAILS
APPROXIMATE GRADE AFTER DEMOLITION

6/8 SOUTH ELEVATION AT COURTYARD
SECTOR - B
1/8" = 1'-0"

EXTERIOR ELEVATIONS - SECTORS A & B

SWEET HOME HIGH SCHOOL
ADDITIONS AND ALTERATIONS 1974
DISTRICT 55 LINN COUNTY, OREGON

ARCHITECTS
HAMLIN, MARTIN,
SCHULTZ & GEYER
AIA
159 W. 12TH EUGENE, OREGON 97401

A
8
JOB NO.

REGISTERED ARCHITECT
CLARE K. HAMLIN
Clare K Hamlin
EUGENE, OREGON
STATE OF OREGON

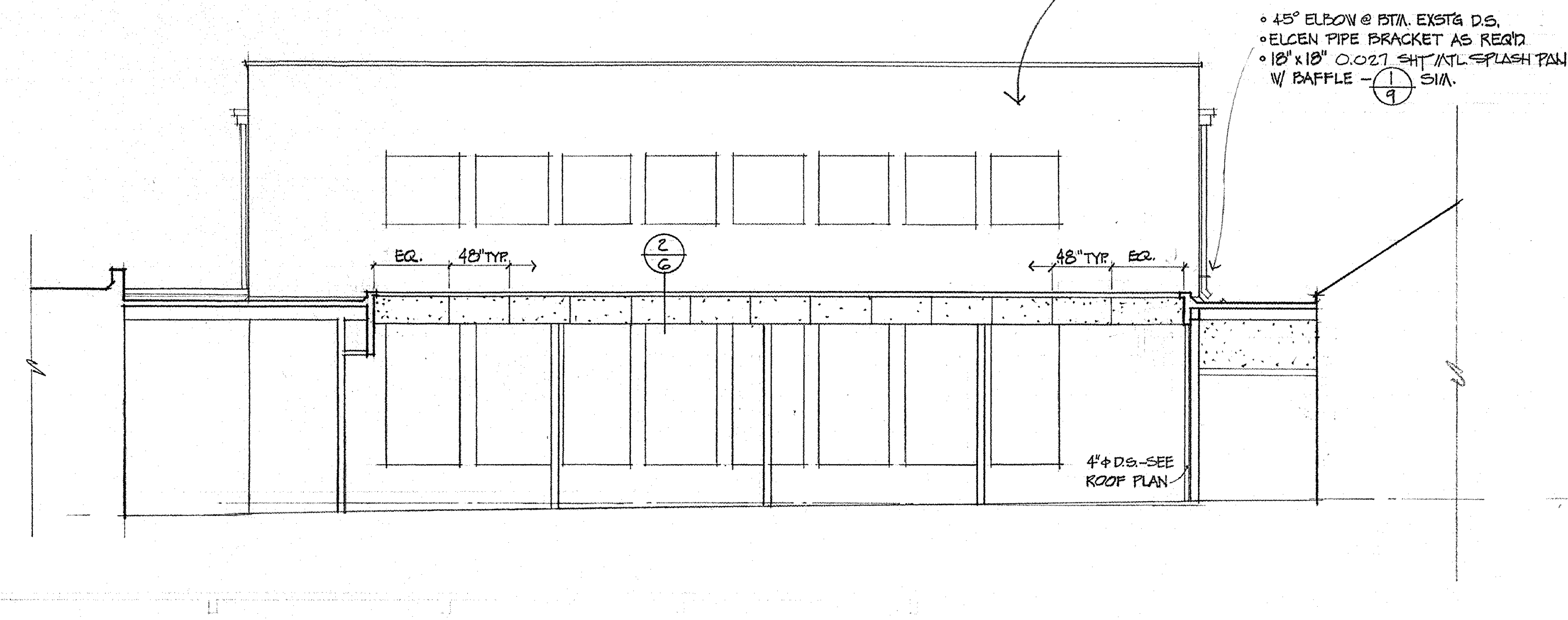

• 45° ELBOW @ BTM. EXST'G D.S.
• ELCEN PIPE BRACKET AS REQ'D
• 18"x18" 0.027 SHT. MTL. SPLASH PAN W/ BAFFLE - 1/9 SIM.
EQ.
48" TYP.
2/6
48" TYP.
EQ.
4" ϕ D.S.-SEE ROOF PLAN

1/9 SOUTH ELEVATION OF EXISTING AUDITORIUM
SECTOR-A
1/8"=1'-0"

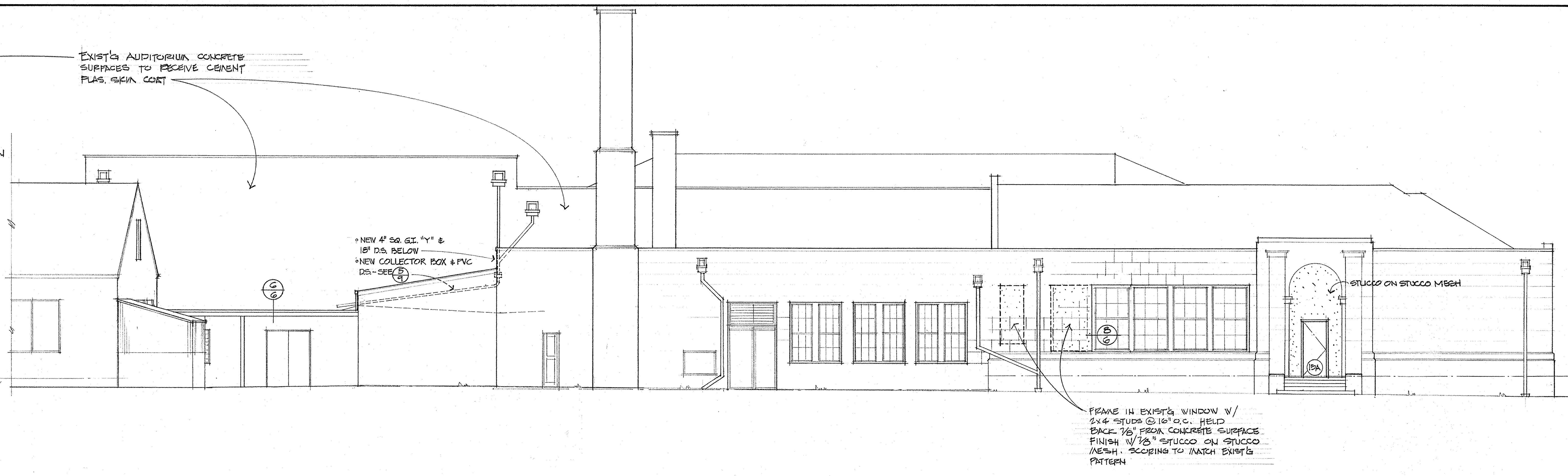

EXIST'G AUDITORIUM CONCRETE SURFACES TO RECEIVE CEMENT PLAS. SKIM COAT
• NEW 4" SQ. G.I. "Y" & 18" D.S. BELOW
• NEW COLLECTOR BOX & PVC D.S.-SEE 5/9
6/6
8/6
STUCCO ON STUCCO MESH
13A
FRAME IN EXIST'G WINDOW W/ 2x4 STUDS @ 16" O.C. HELD BACK 7/8" FROM CONCRETE SURFACE FINISH W/ 7/8" STUCCO ON STUCCO MESH. SCORING TO MATCH EXIST'G PATTERN

2/9 EAST ELEVATION
SECTOR-A
1/8"=1'-0"

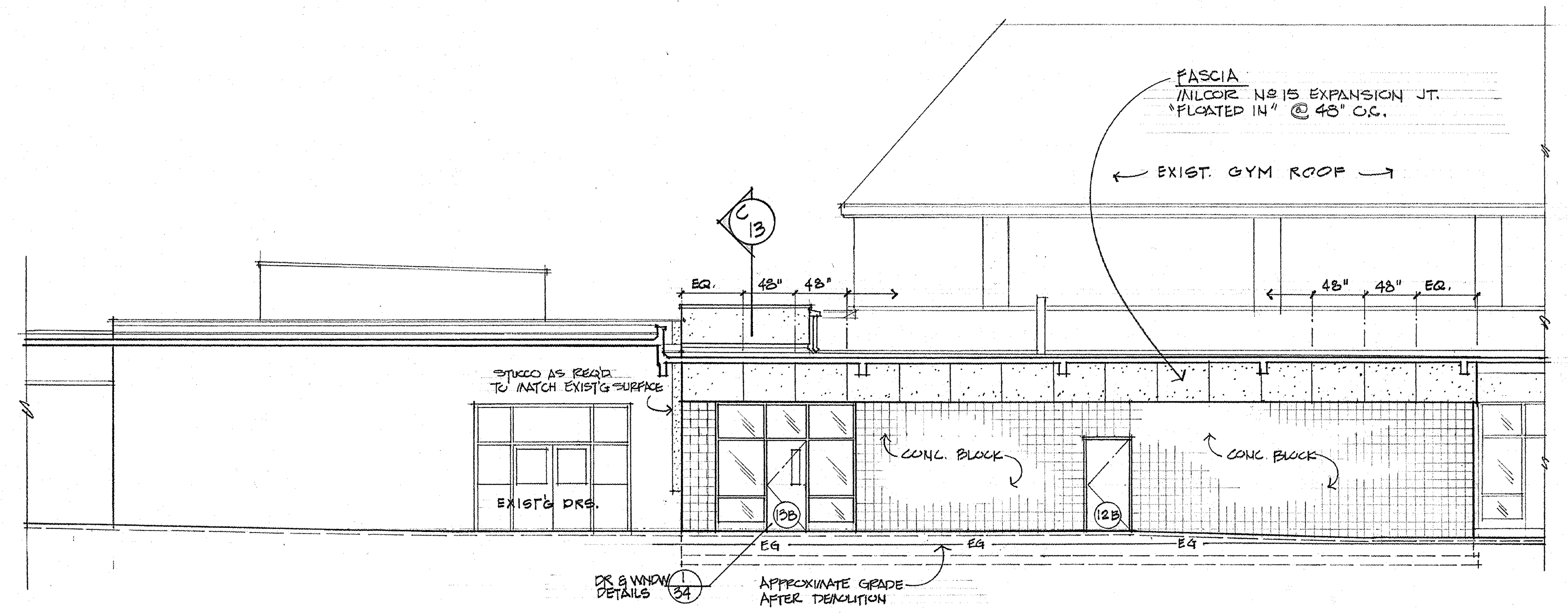

FASCIA
MILCOR No 15 EXPANSION JT. "FLOATED IN" @ 48" O.C.
EXIST. GYM ROOF
C/13
EQ.
48"
48"
48"
48"
EQ.
STUCCO AS REQ'D TO MATCH EXIST'G SURFACE
EXIST'G DRS.
CONC. BLOCK
CONC. BLOCK
13B
12B
EG
EG
EG
DR & WNDW DETAILS 1/34
APPROXIMATE GRADE AFTER DEMOLITION

3/9 WEST ELEVATION AT PASSAGEWAY
SECTOR-B
1/8"=1'-0"

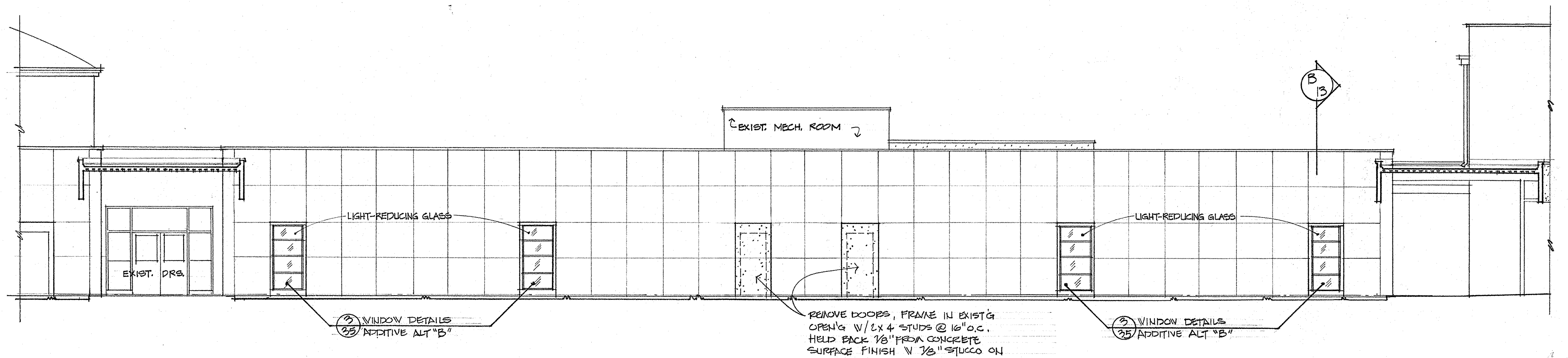

EXIST. MECH. ROOM
B/13
EXIST. DRS.
LIGHT-REDUCING GLASS
LIGHT-REDUCING GLASS
3/35 WINDOW DETAILS ADDITIVE ALT "B"
REMOVE DOORS, FRAME IN EXIST'G OPEN'G W/ 2x4 STUDS @ 16" O.C. HELD BACK 7/8" FROM CONCRETE SURFACE FINISH W 7/8" STUCCO ON STUCCO MESH. SCORING TO MATCH EXIST'G PATTERN
3/35 WINDOW DETAILS ADDITIVE ALT "B"

4/9 SOUTH ELEVATION OF EXISTING CLASSROOM WING
SECTOR-B
1/8"=1'-0"

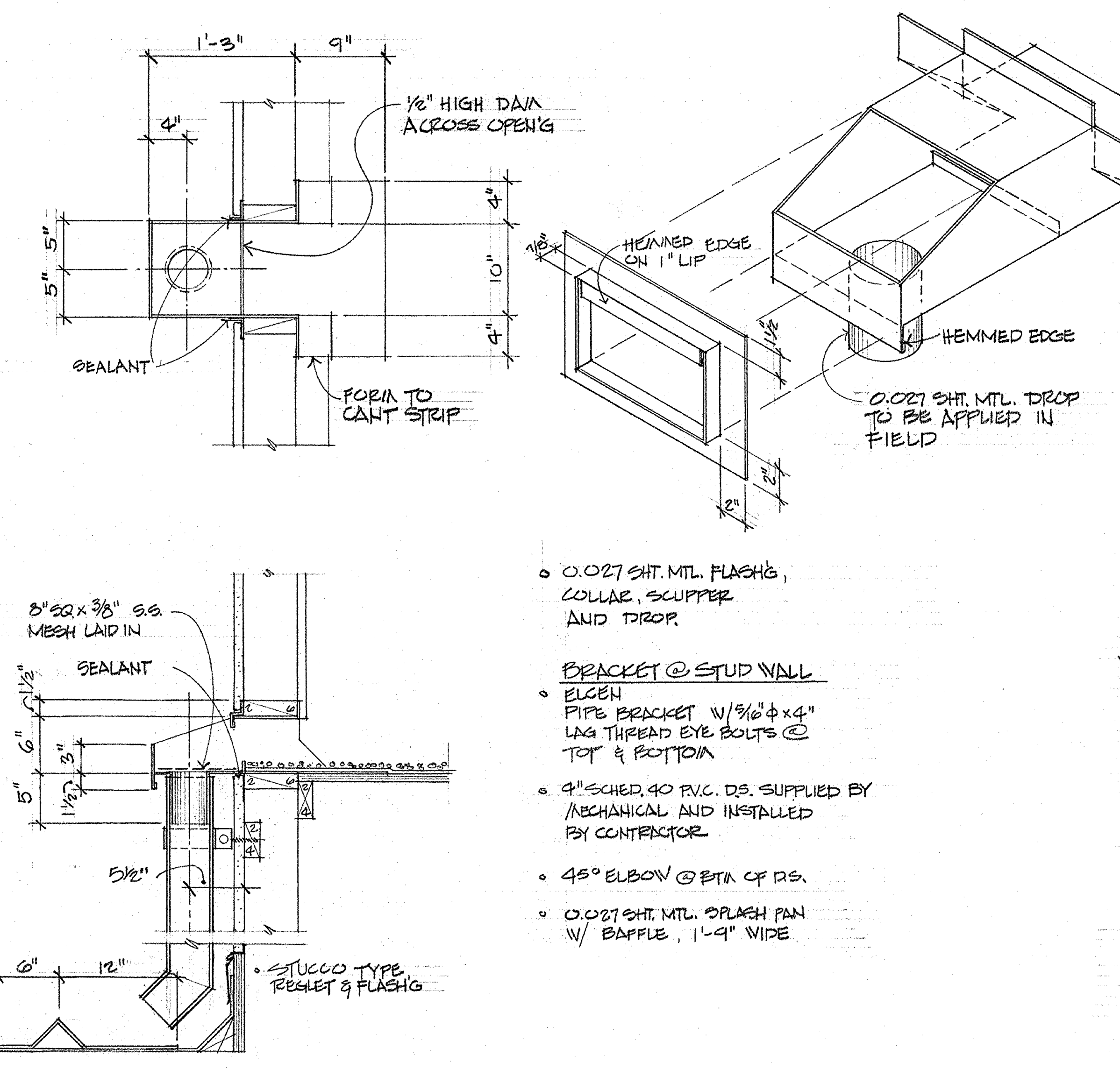

1'-3"
9"
4"
1/2" HIGH DAM ACROSS OPEN'G
5"
5"
4"
10"
4"
SEALANT
FORM TO CANT STRIP
HEMMED EDGE ON 1" LIP
7/8"
1 1/2"
HEMMED EDGE
0.027 SHT. MTL. DROP TO BE APPLIED IN FIELD
2"
2"
8" SQ x 3/8" S.S. MESH LAID IN
SEALANT
1 1/2"
6"
3"
5"
1 1/2"
5 1/2"
6"
12"
• STUCCO TYPE REGLET & FLASH'G

- 0.027 SHT. MTL. FLASH'G, COLLAR, SCUPPER AND DROP.

BRACKET @ STUD WALL
- ELCEN PIPE BRACKET W/ 5/16" ϕ x 4" LAG THREAD EYE BOLTS @ TOP & BOTTOM
- 4" SCHED. 40 P.V.C. D.S. SUPPLIED BY MECHANICAL AND INSTALLED BY CONTRACTOR
- 45° ELBOW @ BTM OF D.S.
- 0.027 SHT. MTL. SPLASH PAN W/ BAFFLE, 1'-9" WIDE

1/9 SCUPPER & D.S. DETAILS
1"=1'-0"

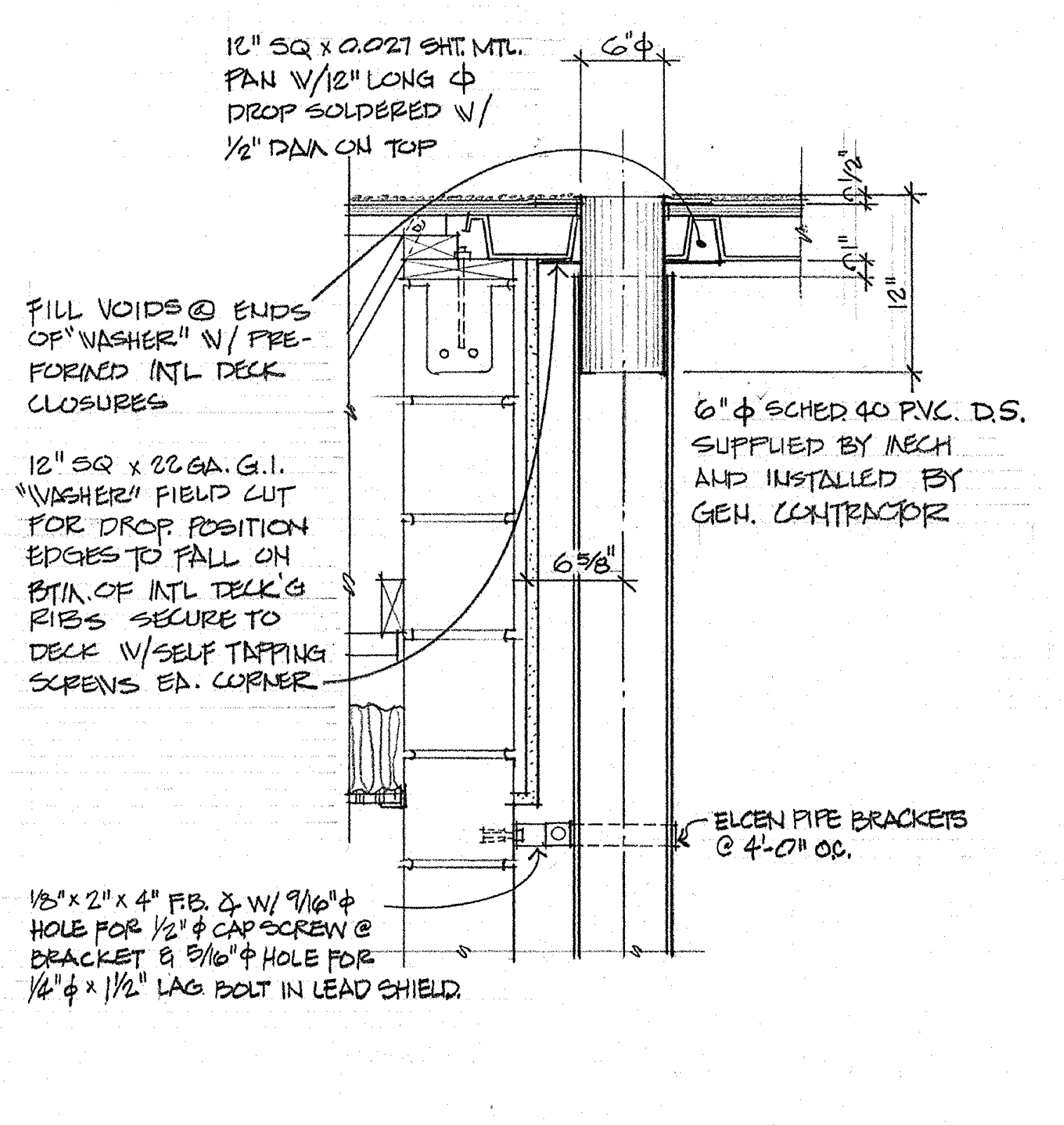

12" SQ x 0.027 SHT. MTL. PAN W/ 12" LONG ϕ DROP SOLDERED W/ 1/2" DAM ON TOP
6" ϕ
1/2"
1"
12"
FILL VOIDS @ ENDS OF "WASHER" W/ PRE-FORMED MTL DECK CLOSURES
12" SQ x 22 GA. G.I. "WASHER" FIELD CUT FOR DROP. POSITION EDGES TO FALL ON BTM. OF MTL DECK'G RIBS SECURE TO DECK W/ SELF TAPPING SCREWS EA. CORNER
6" ϕ SCHED 40 P.V.C. D.S. SUPPLIED BY MECH AND INSTALLED BY GEN. CONTRACTOR
6 5/8"
ELCEN PIPE BRACKETS @ 4'-0" O.C.
1/8" x 2" x 4" F.B. & W/ 9/16" ϕ HOLE FOR 1/2" ϕ CAP SCREW @ BRACKET & 5/16" ϕ HOLE FOR 1/4" ϕ x 1 1/2" LAG BOLT IN LEAD SHIELD.

2/9 DOWNSPOUT DTL @ MTL. DECK'G
1"=1'-0"

3/9 UNASSIGNED

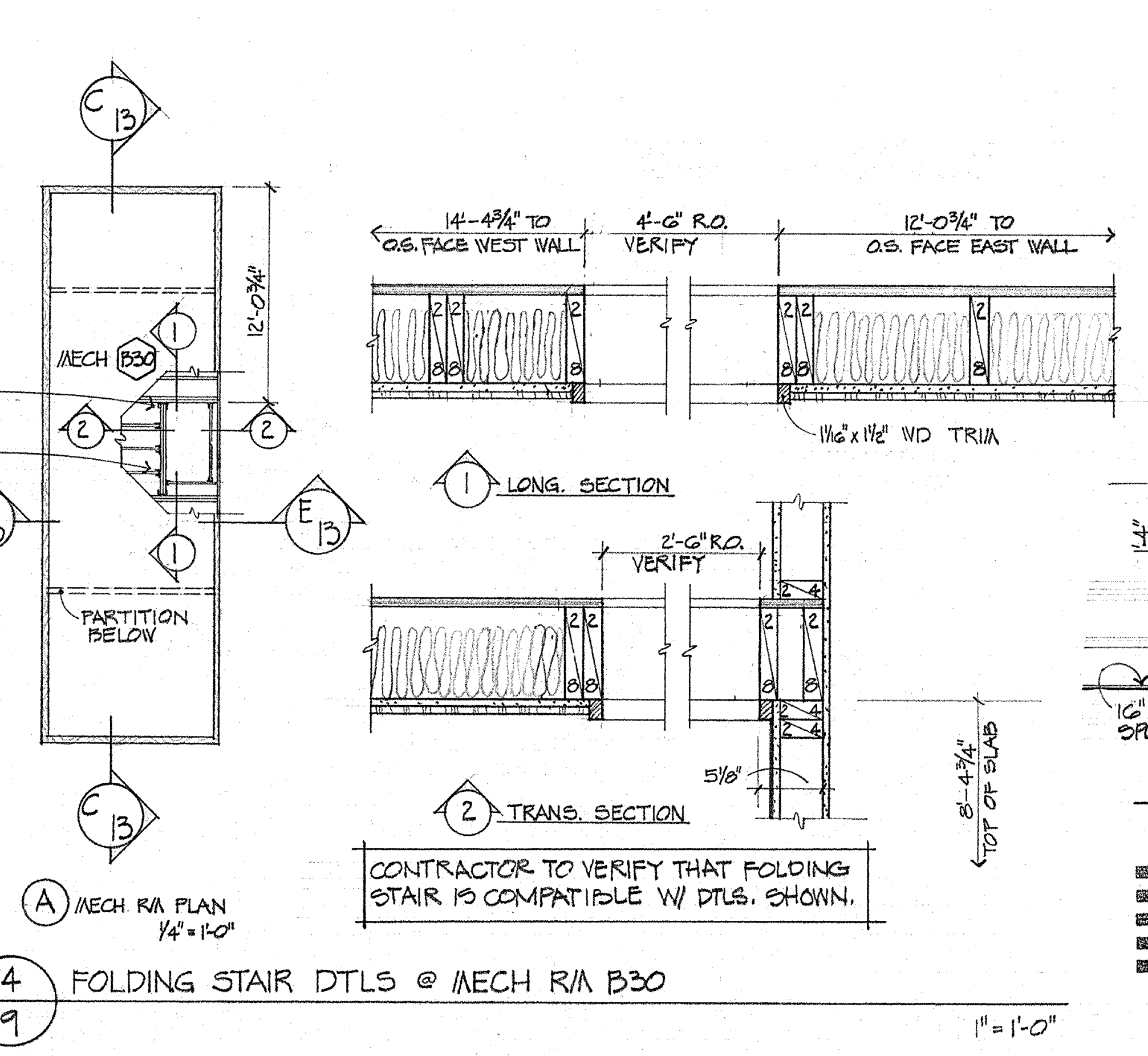

C/13
MECH B30
12'-0 3/4"
SIMPSON HU28-2TF JOIST HANGER (2 REQ'D)
SIMPSON HU28TF JOIST HANGER (5 REQ'D)
1
2
2
E/13
E/13
1
PARTITION BELOW
C/13
A MECH. RM PLAN 1/4"=1'-0"
14'-4 3/4" TO O.S. FACE WEST WALL
4'-6" R.O. VERIFY
12'-0 3/4" TO O.S. FACE EAST WALL
1 1/16" x 1 1/2" WD TRIM
1 LONG. SECTION
2'-6" R.O. VERIFY
5 1/8"
2 TRANS. SECTION
8'-4 3/4" TOP OF SLAB

CONTRACTOR TO VERIFY THAT FOLDING STAIR IS COMPATIBLE W/ DTLS. SHOWN.

4/9 FOLDING STAIR DTLS @ MECH RM B30
1"=1'-0"

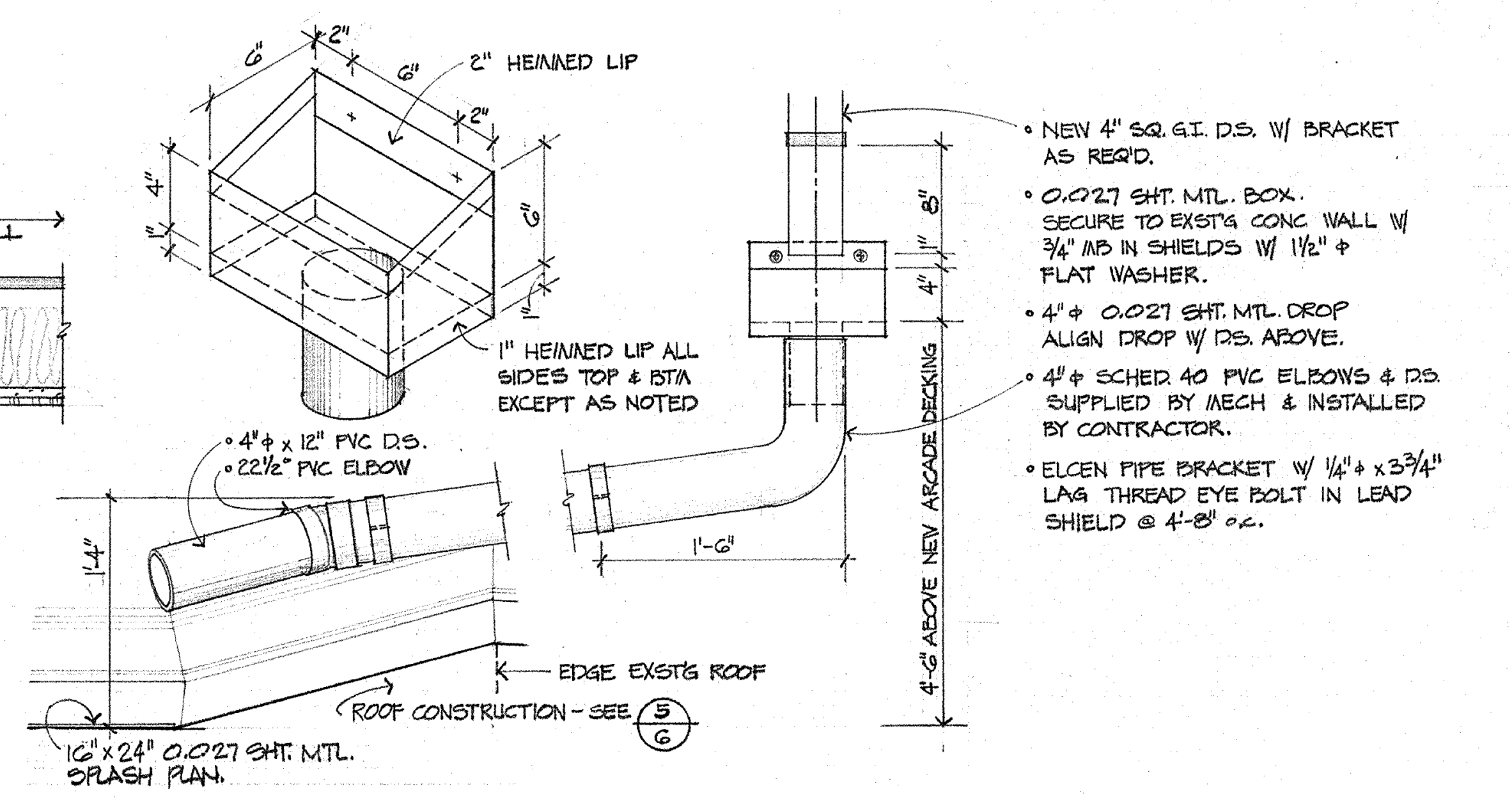

6"
2"
6"
2" HEMMED LIP
2"
4"
1"
6"
1"
1" HEMMED LIP ALL SIDES TOP & BTM EXCEPT AS NOTED
• 4" ϕ x 12" PVC D.S.
• 22 1/2° PVC ELBOW
1'-4"
1'-6"
EDGE EXST'G ROOF
ROOF CONSTRUCTION - SEE 5/6
16" x 24" 0.027 SHT. MTL. SPLASH PAN.
8"
1"
4"
4'-6" ABOVE NEW ARCADE DECKING

- NEW 4" SQ. G.I. D.S. W/ BRACKET AS REQ'D.
- 0.027 SHT. MTL. BOX. SECURE TO EXST'G CONC WALL W/ 3/4" MB IN SHIELDS W/ 1 1/2" ϕ FLAT WASHER.
- 4" ϕ 0.027 SHT. MTL. DROP ALIGN DROP W/ D.S. ABOVE.
- 4" ϕ SCHED. 40 PVC ELBOWS & D.S. SUPPLIED BY MECH & INSTALLED BY CONTRACTOR.
- ELCEN PIPE BRACKET W/ 1/4" ϕ x 3 3/4" LAG THREAD EYE BOLT IN LEAD SHIELD @ 4'-8" o.c.

5/9 COLLECTOR BOX AND D.S. @ EAST AUDITORIUM WALL
1"=1'-0"

EXTERIOR ELEVATIONS & DETAILS - SECTORS A & B

SWEET HOME HIGH SCHOOL
ADDITIONS AND ALTERATIONS 1974
DISTRICT 55 LINN COUNTY, OREGON

ARCHITECTS
HAMLIN, MARTIN, SCHULTZ & GEYER
AIA
159 W. 12TH EUGENE, OREGON 97401

A
9
JOB NO.

CLARE K. HAMLIN
Clare K Hamlin
EUGENE, OREGON

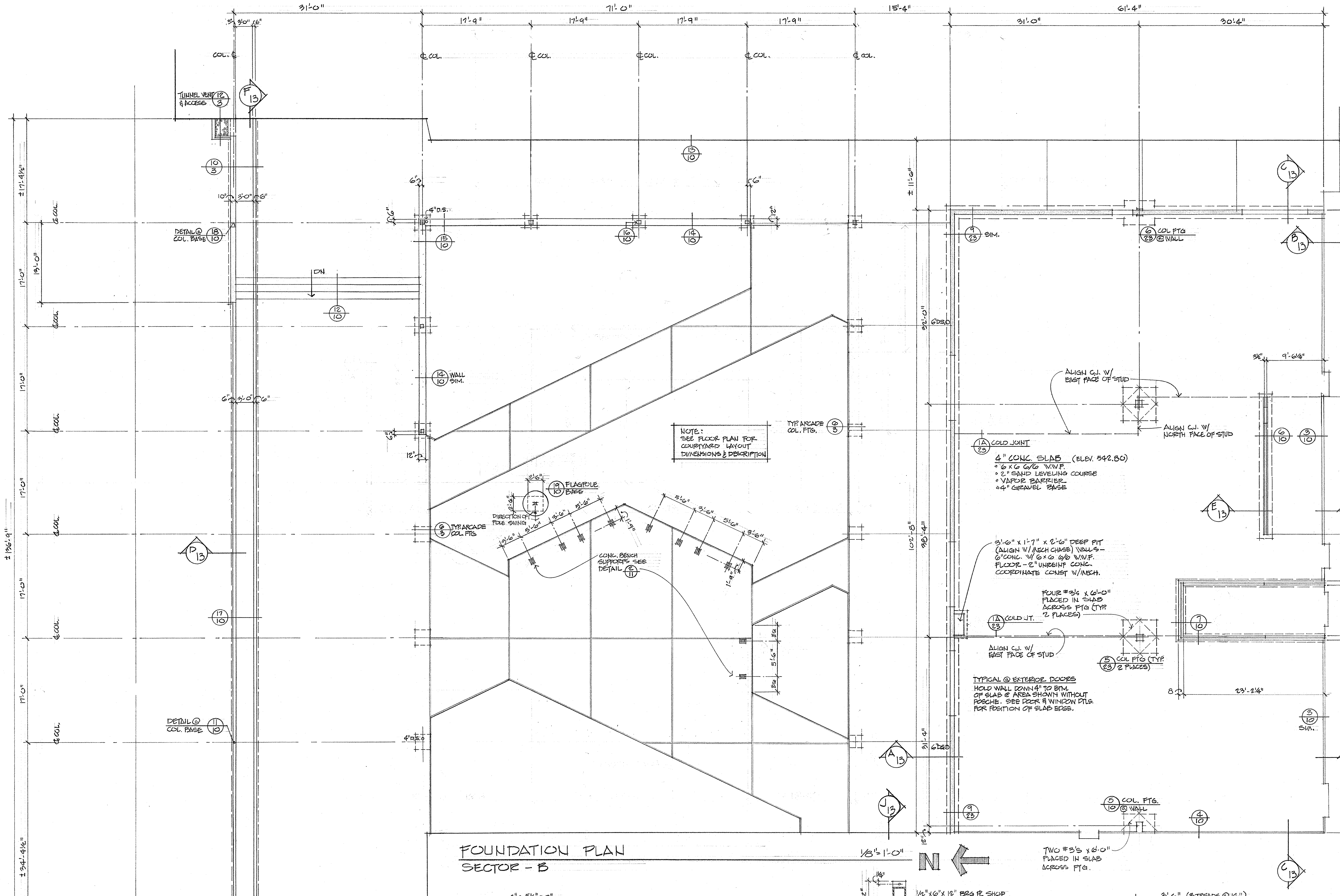
31'-0"
71'-0"
15'-4"
31'-0"
61'-4"
30'-4"
17'-9"
℄ COL.
TUNNEL VENT & ACCESS
DETAIL @ COL. BASE
NOTE: SEE FLOOR PLAN FOR COURTYARD LAYOUT DIMENSIONS & DESCRIPTION
TYP. ARCADE COL. FTG.
FLAGPOLE
CONC. BENCH SUPPORTS SEE DETAIL
DN
Align C.J. w/ East face of stud
Align C.J. w/ North face of stud
COLD JOINT
4" CONC. SLAB (ELEV. 542.50)
6x6 6/6 W.W.F.
2" SAND LEVELING COURSE
VAPOR BARRIER
4" GRAVEL BASE
3'-6" x 1'-7" x 2'-6" DEEP PIT (ALIGN W/ MECH CHASE) WALLS - 6" CONC. W/ 6x6 6/6 W.W.F. FLOOR - 2" UNBONT CONC. COORDINATE CONST W/ MECH.
FOUR #5's x 6'-0" PLACED IN SLAB ACROSS FTG (TYP. 2 PLACES)
COL FTG (TYP. 2 PLACES)
TYPICAL @ EXTERIOR DOORS HOLD WALL DOWN 4" TO BTM. OF SLAB @ AREA SHOWN WITHOUT PORCHE. SEE DOOR & WINDOW DTLS FOR POSITION OF SLAB EDGE.
COL FTG @ WALL
TWO #5's x 8'-0" PLACED IN SLAB ACROSS FTG.
DETAIL @ COL. BASE

FOUNDATION PLAN

SECTOR - B 1/8"=1'-0"

N

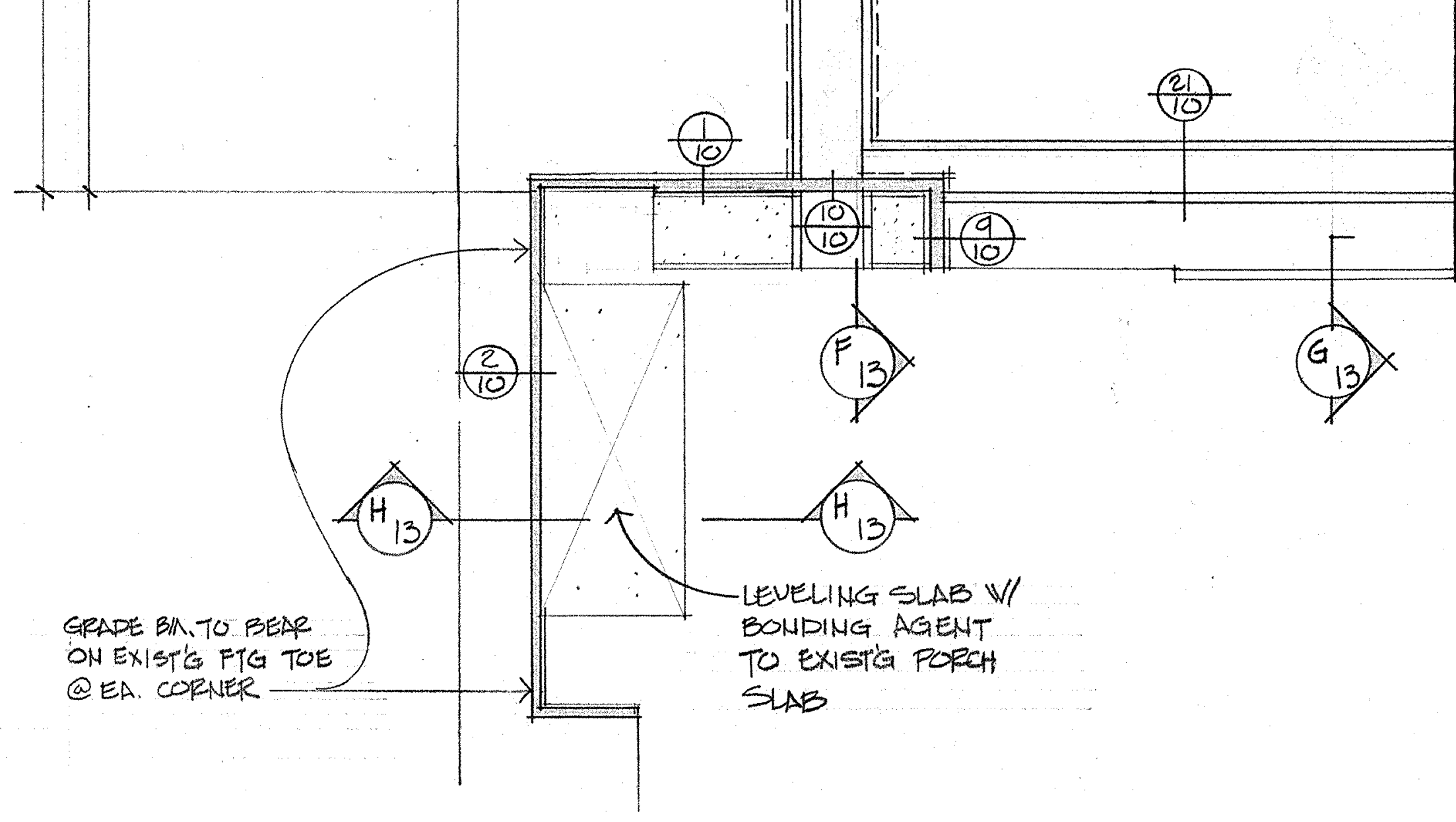
GRADE BM. TO BEAR ON EXIST'G FTG TOE @ EA. CORNER
LEVELING SLAB W/ BONDING AGENT TO EXIST'G PORCH SLAB
EXIST'G PIPE TRENCH

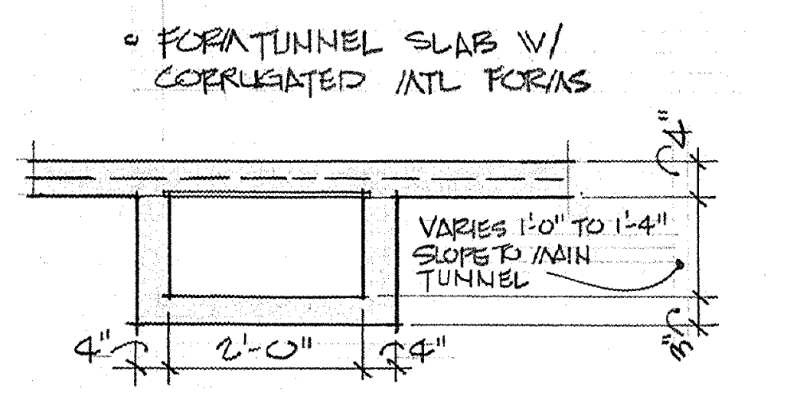
ONE LAYER 6x6 10/10 W.W.F. IN SLAB
FORM TUNNEL SLAB W/ CORRUGATED MTL FORMS
VARIES 1'-0" TO 1'-4" SLOPE TO MAIN TUNNEL
2'-0"

21 SECTION THRU SMALL
10 PIPE TRENCH 1/2"=1'-0"

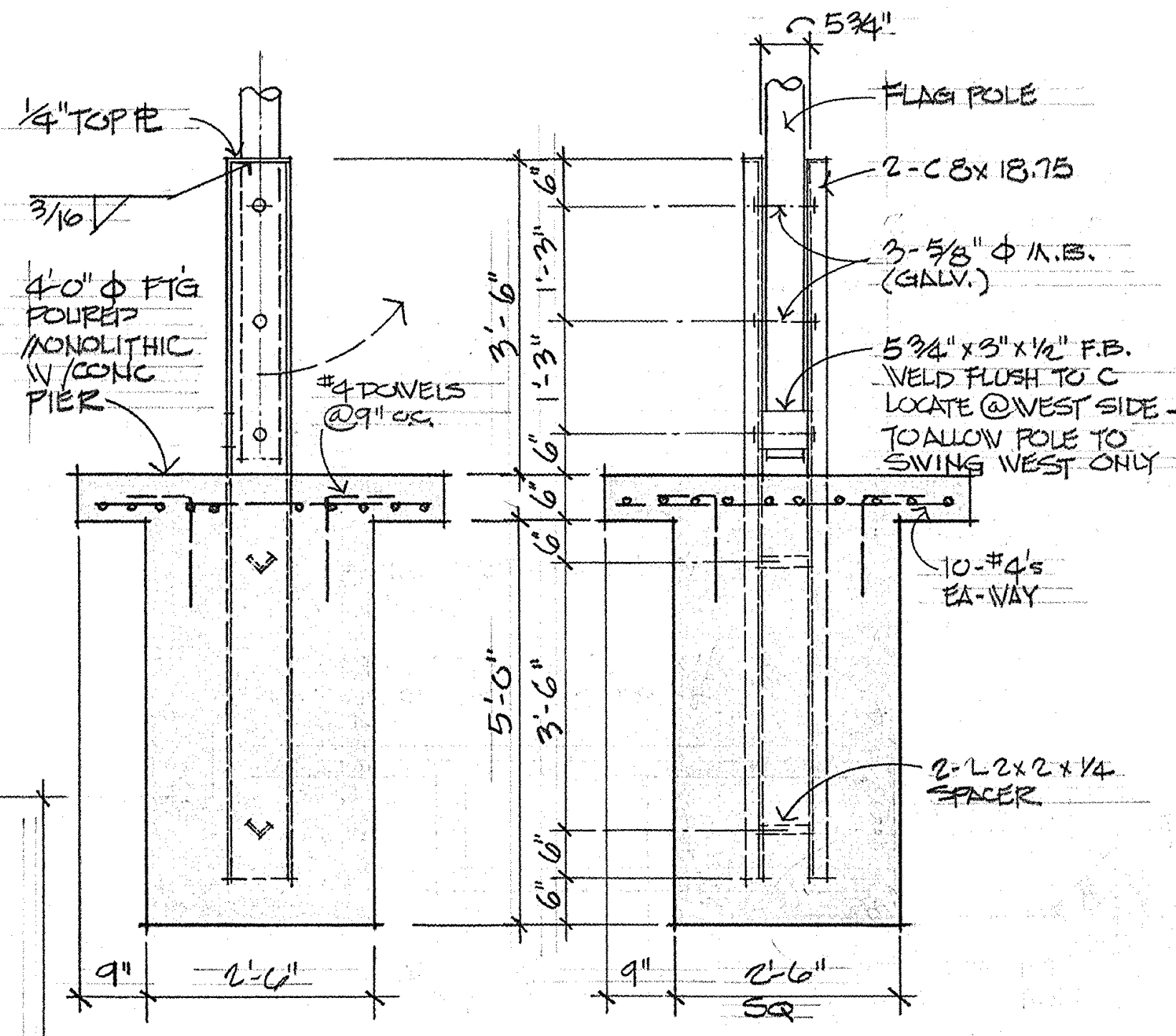
1/4" TOP PL
4'-0" Φ FTG POURED MONOLITHIC W/ CONC PIER
#4 DOWELS @ 9" O.C.
FLAG POLE
2-C 8 x 18.75
3-5/8" Φ A.B. (GALV.)
5/8" x 9" x 1/2" P.L. WELD FLUSH TO C LOCATE @ WEST SIDE TO ALLOW POLE TO SWING WEST ONLY
10-#4's EA. WAY
2-L 2 x 2 x 1/4 SPACER
2'-6" SQ.

19 FLAGPOLE FTG DTL. 1/2"=1'-0"

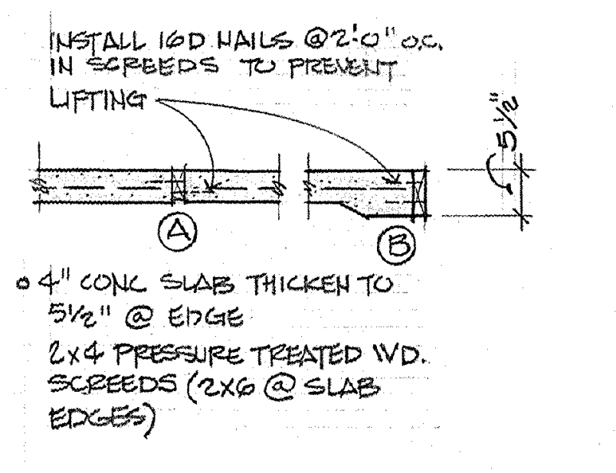
INSTALL 16D NAILS @ 2'-0" O.C. IN SCREEDS TO PREVENT LIFTING
4" CONC. SLAB THICKEN TO 5 1/2" @ EDGE
2x4 PRESSURE TREATED WD. SCREEDS (2x6 @ SLAB EDGES)

20 SCREED JTS @ EXTERIOR
10 SLAB IN COURTYARD 1/2"=1'-0"

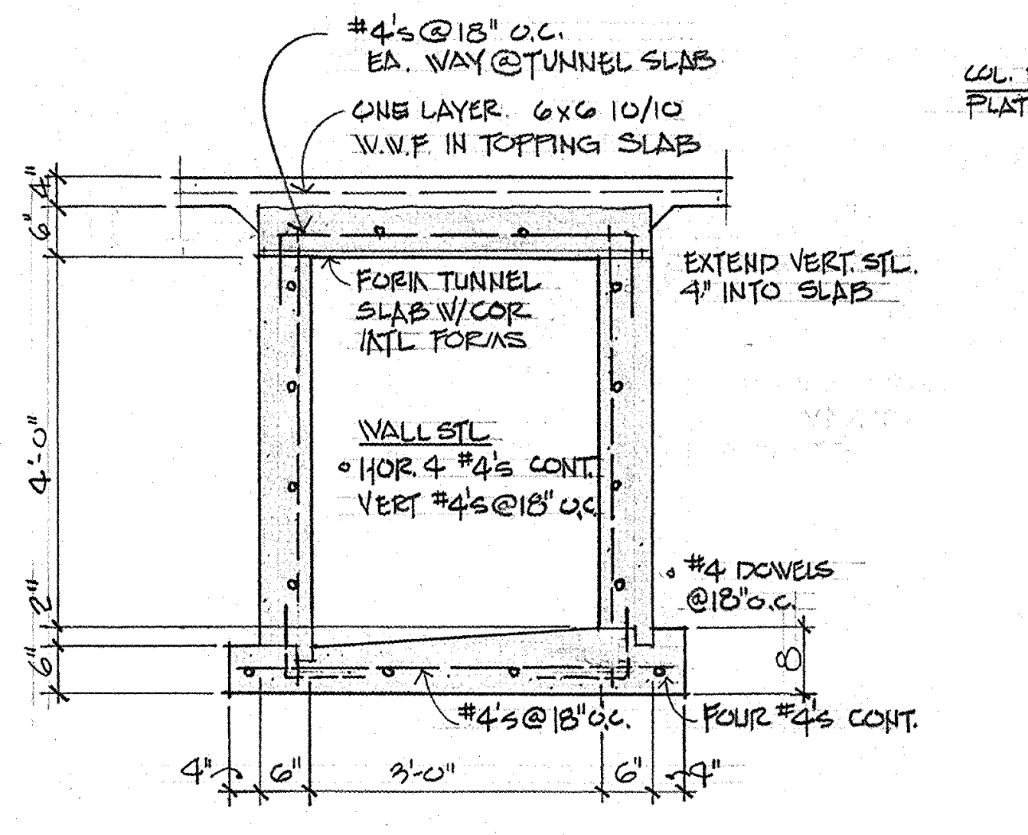
#4's @ 18" O.C. EA. WAY @ TUNNEL SLAB
ONE LAYER 6x6 10/10 W.W.F. IN TOPPING SLAB
FORM TUNNEL SLAB W/ COR MTL FORMS
EXTEND VERT. STL. 4" INTO SLAB
WALL STL. HOR 4 #4's CONT. VERT #4's @ 18" O.C.
#4 DOWELS @ 18" O.C.
#4's @ 18" O.C.
FOUR #4's CONT.
3'-0"

17 SECTION THRU
10 MECH. TUNNEL 1/2"=1'-0"

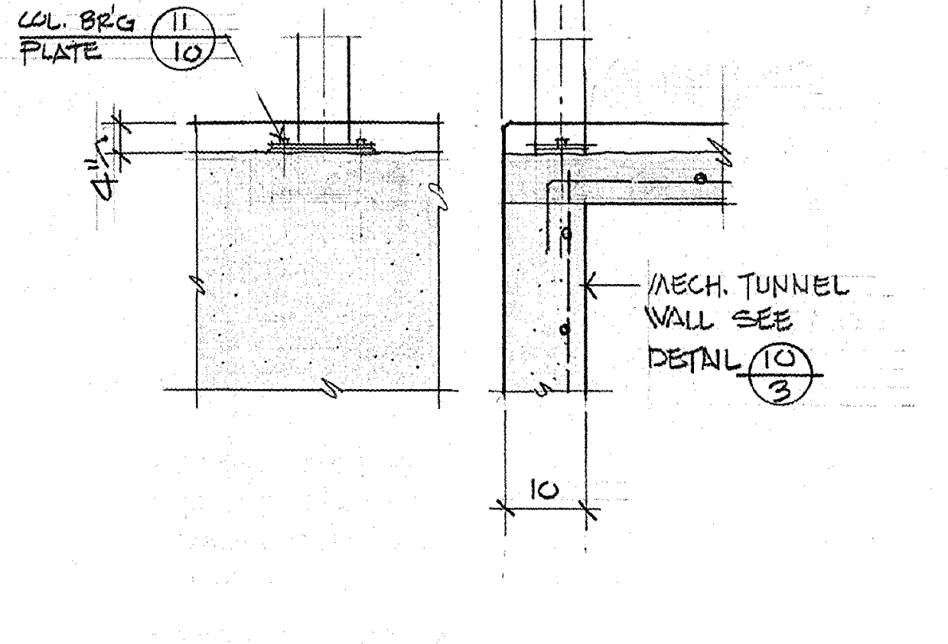
COL BRG PLATE
MECH. TUNNEL WALL SEE DETAIL

18 COL FTG DTL EAST SIDE
10 OF ARCADE (BUS LOAD'G AREA) 1/2"=1'-0"

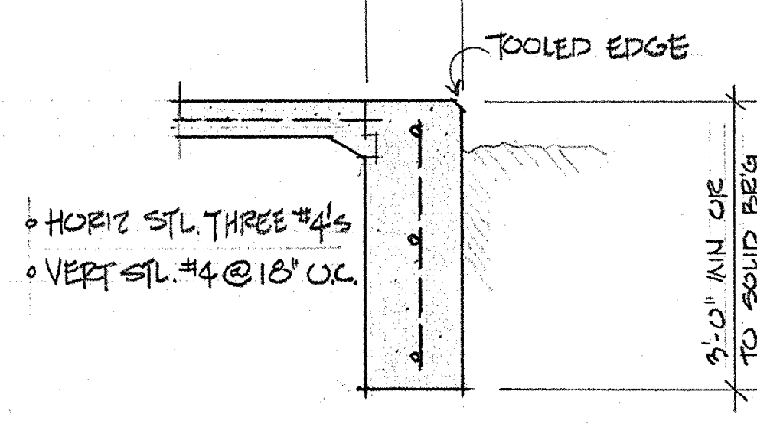
TOOLED EDGE
HORIZ STL THREE #4's
VERT STL. #4 @ 18" O.C.
2'-0" MIN OR TO SOLID BRG

15 SLAB EDGE @
10 TOP OF RAMPS 1/2"=1'-0"

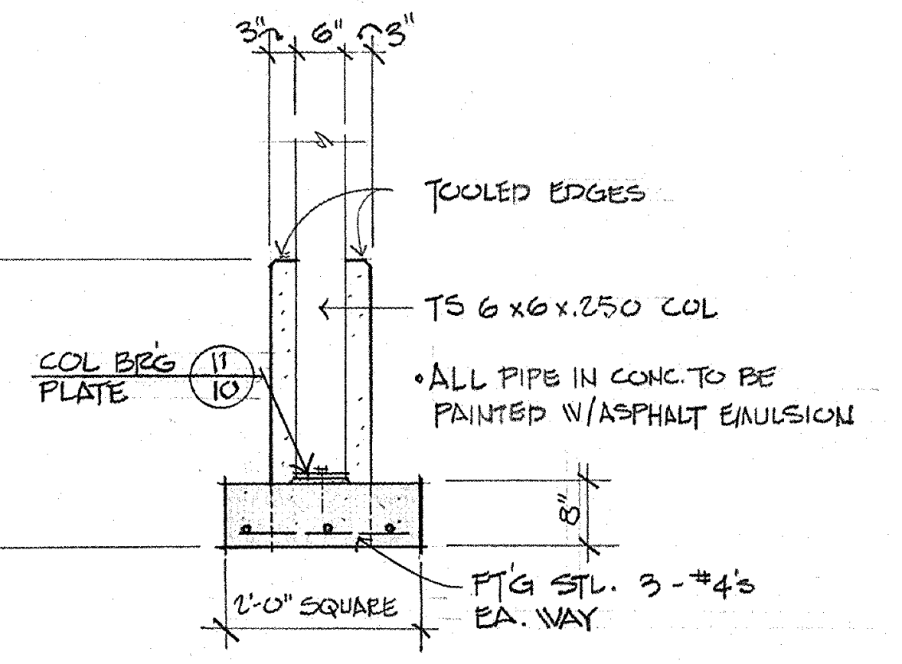
TOOLED EDGES
TS 6 x 6 x .250 COL
ALL PIPS IN CONC TO BE PAINTED W/ ASPHALT EMULSION
COL BRG PLATE
FTG STL. 3-#4's EA. WAY
2'-0" SQUARE

16 ARCADE COL. FTG
10 @ PLANTER WALL 1/2"=1'-0"

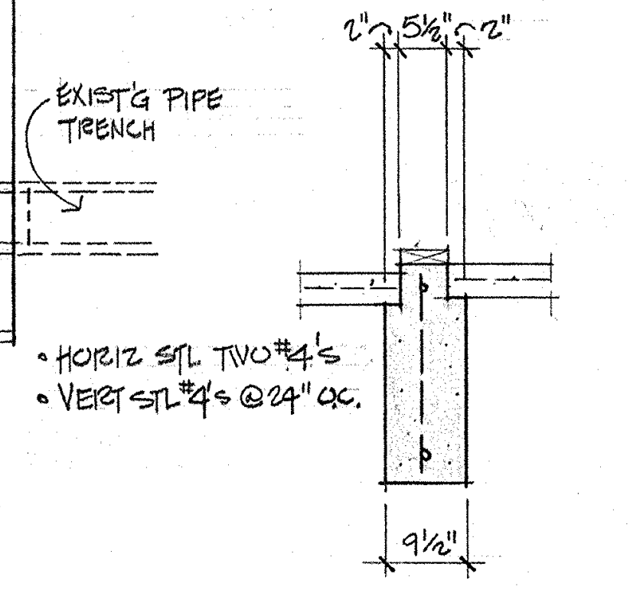
HORIZ STL TWO #4's
VERT STL #4's @ 24" O.C.

9 FACADE WALL
10 GRADE BEAM 1/2"=1'-0"

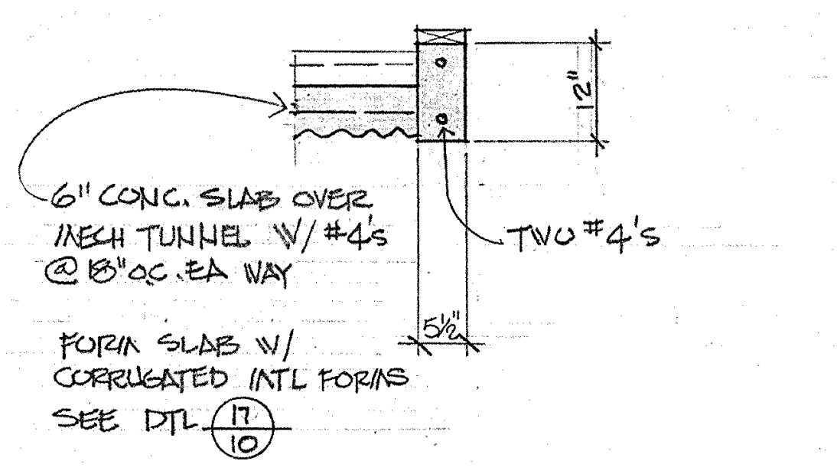
6" CONC. SLAB OVER MECH TUNNEL W/ #4's @ 18" O.C. EA WAY
TWO #4's
FORM SLAB W/ CORRUGATED MTL FORMS SEE DTL

10 FACADE WALL BEAM @
10 MECH. TUNNEL 1/2"=1'-0"

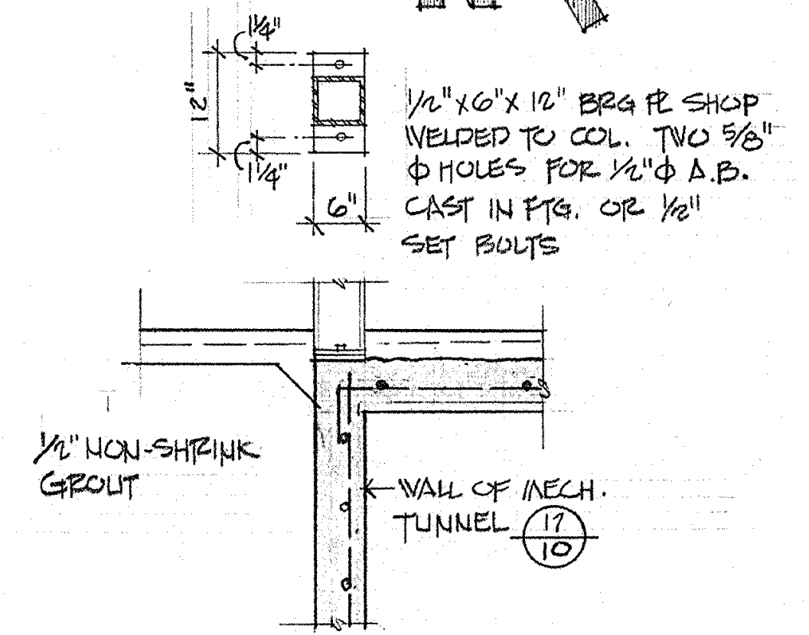
1/2" x 6" x 12" BRG PL SHOP WELDED TO COL. TWO 5/8" Φ HOLES FOR 1/2" Φ A.B. CAST IN FTG. OR 1/2" SET BOLTS
1/2" NON-SHRINK GROUT
WALL OF MECH. TUNNEL

11 ARCADE COL. FTG @
10 MECH. TUNNEL WALL 1/2"=1'-0"

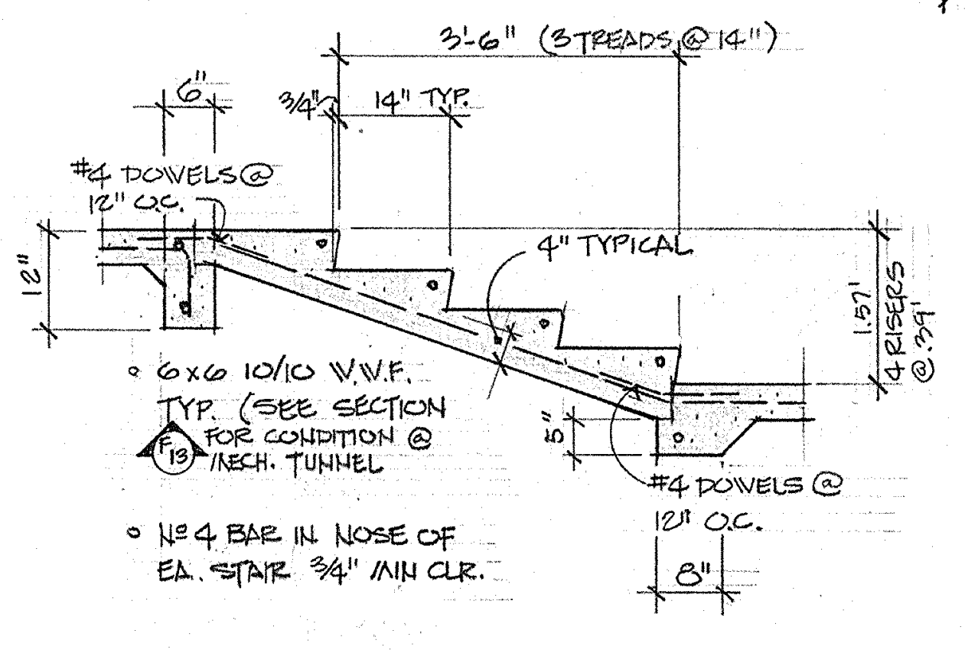
3'-6" (3 TREADS @ 14")
14" TYP.
#4 DOWELS @ 12" O.C.
4" TYPICAL
6x6 10/10 W.W.F. TYP. (SEE SECTION FOR CONDITION @ MECH. TUNNEL)
1 1/2" RISERS @ 3 3/4"
#4 DOWELS @ 12" O.C.
1-#4 BAR IN NOSE OF EA. STAIR 3/4" MIN CLR.

12 STAIR SECTION 1/2"=1'-0"

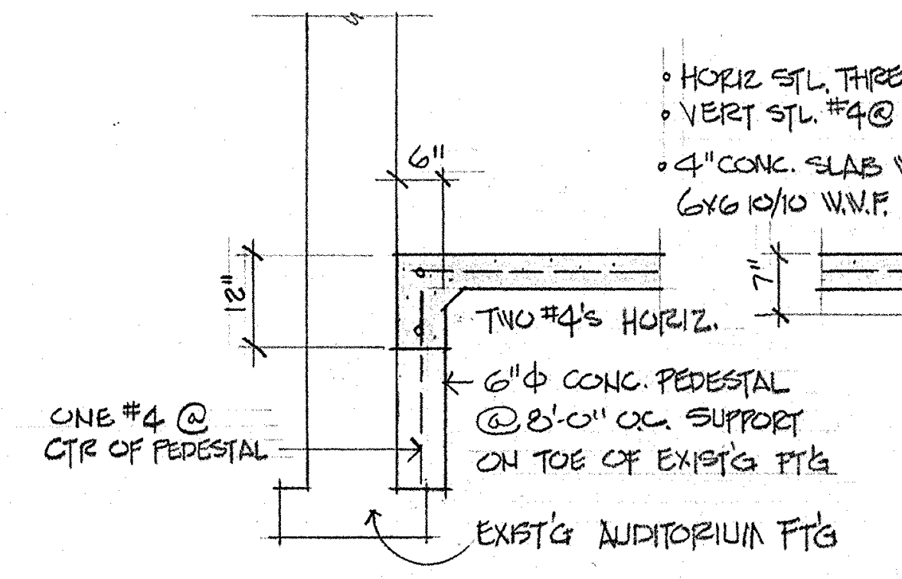
TWO #4's HORIZ.
6" Φ CONC. PEDESTAL @ 8'-0" O.C. SUPPORT ON TOE OF EXIST'G FTG
ONE #4 @ CTR OF PEDESTAL
EXIST'G AUDITORIUM FTG

13 SLAB EDGE @
10 EXIST'G WALL 1/2"=1'-0"

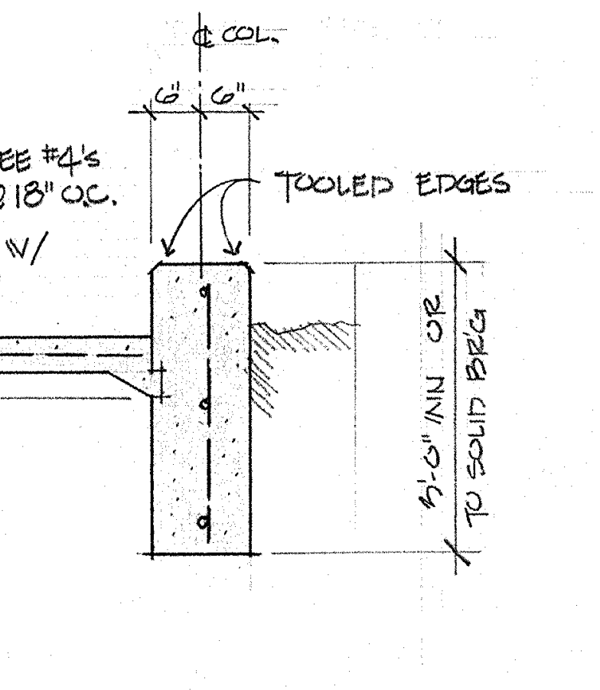
℄ COL.
HORIZ STL THREE #4's
VERT STL #4 @ 18" O.C.
4" CONC. SLAB W/ 6x6 10/10 W.W.F.
TOOLED EDGES
2'-0" MIN OR TO SOLID BRG

14 PLANTER WALL 1/2"=1'-0"

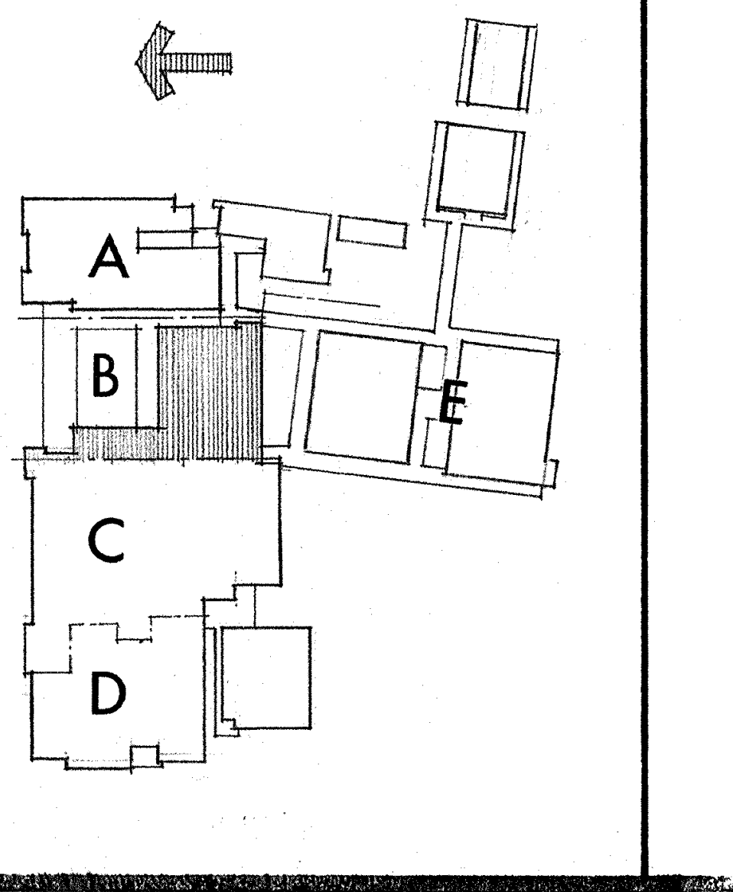

NOTE: EXPOSED VERTICAL CONC. SURFACES IN COURT AREA INCLUDING PLANTER, RAMP AND STAIR WALLS TO BE ARCHITECTURAL CONCRETE PER SPEC.

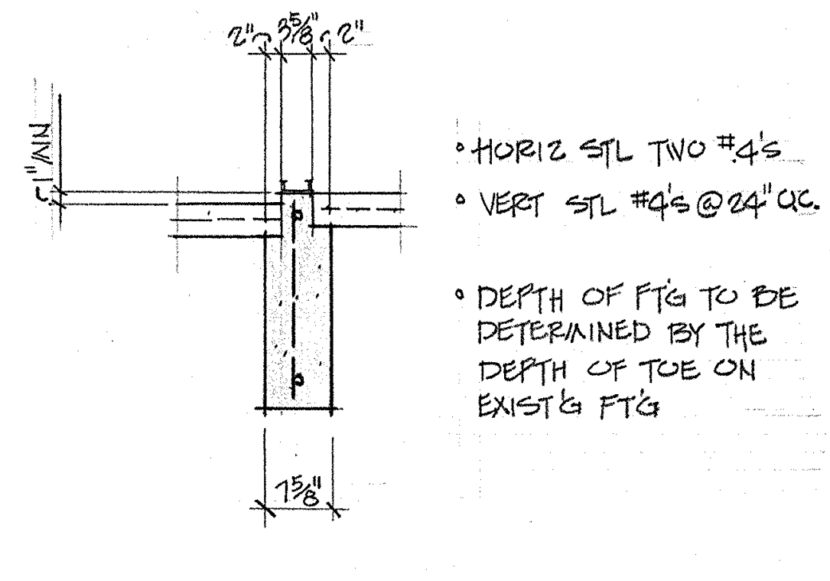
HORIZ STL TWO #4's
VERT STL #4's @ 24" O.C.
DEPTH OF FTG TO BE DETERMINED BY THE DEPTH OF TOE ON EXIST'G FTG

1 FACADE WALL
10 GRADE BEAM 1/2"=1'-0"

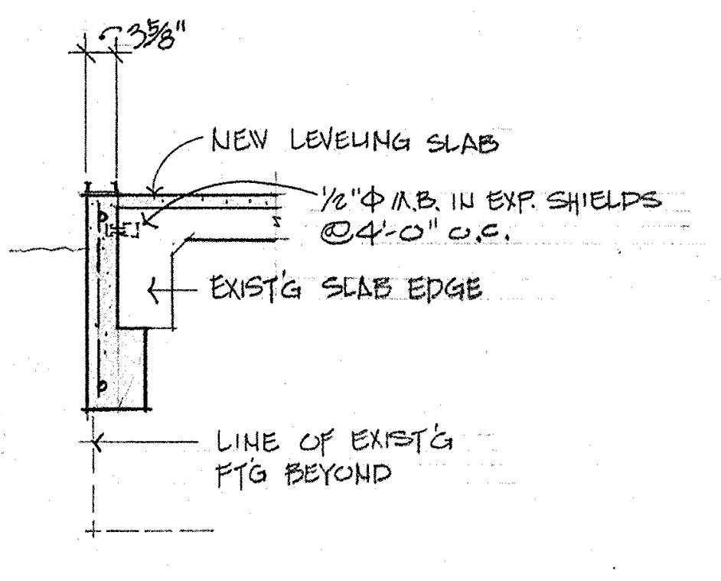
NEW LEVELING SLAB
1/2" Φ A.B. IN EXP. SHIELDS @ 4'-0" O.C.
EXIST'G SLAB EDGE
LINE OF EXIST'G FTG BEYOND

2 FACADE WALL
10 GRADE BEAM 1/2"=1'-0"

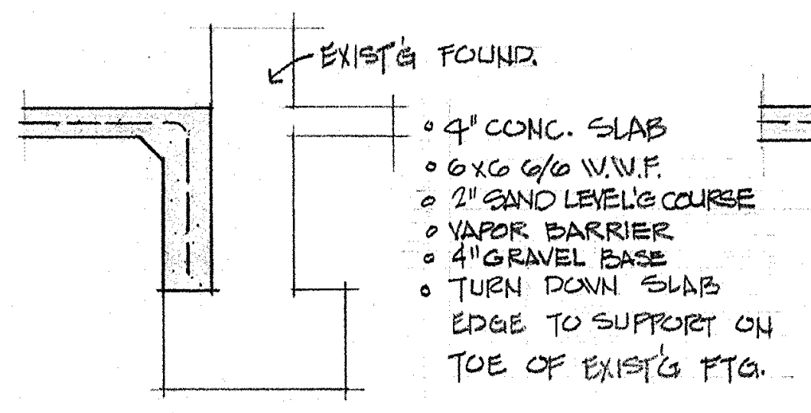
EXIST'G FOUND.
4" CONC. SLAB
6x6 6/6 W.W.F.
2" SAND LEVEL'G COURSE
VAPOR BARRIER
4" GRAVEL BASE
TURN DOWN SLAB EDGE TO SUPPORT ON TOE OF EXIST'G FTG.

3 SLAB EDGE @
10 EXIST'G WALL 1/2"=1'-0"

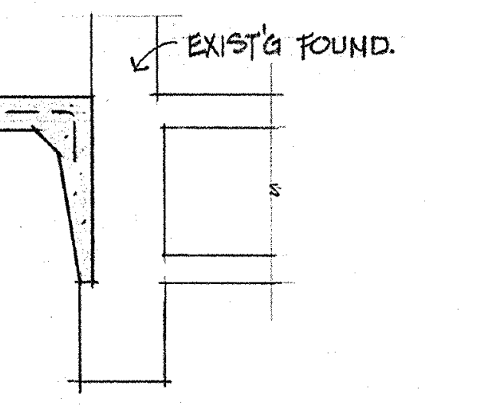
EXIST'G FOUND.

4 SLAB EDGE @
10 EXIST'G WALL 1/2"=1'-0"

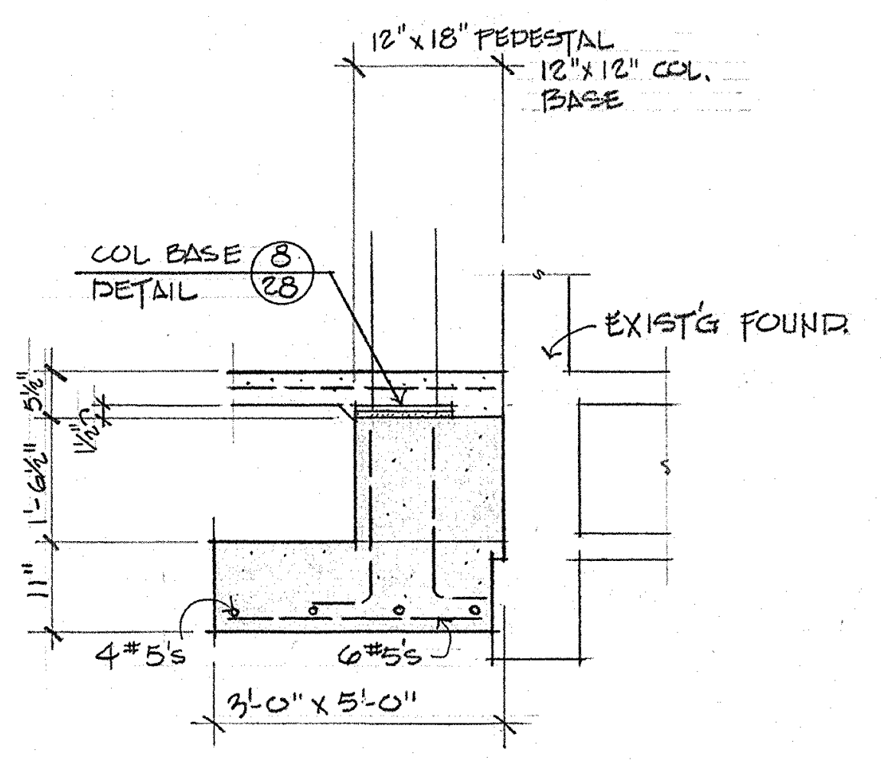
12" x 18" PEDESTAL
12" x 12" COL. BASE
COL BASE DETAIL
EXIST'G FOUND
4 #5's
3'-0" x 5'-0"

5 COLUMN FTG @
10 EXIST'G WALL 1/2"=1'-0"

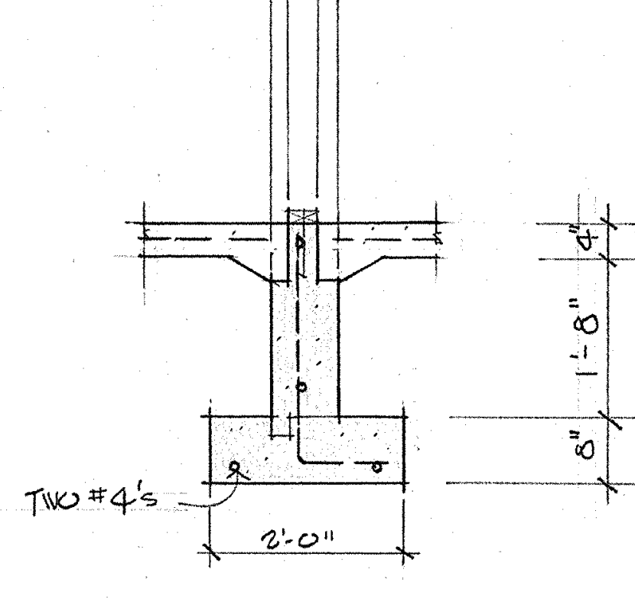

6 FTG @ MECH RM.
10 BEAR'G WALL 1/2"=1'-0"

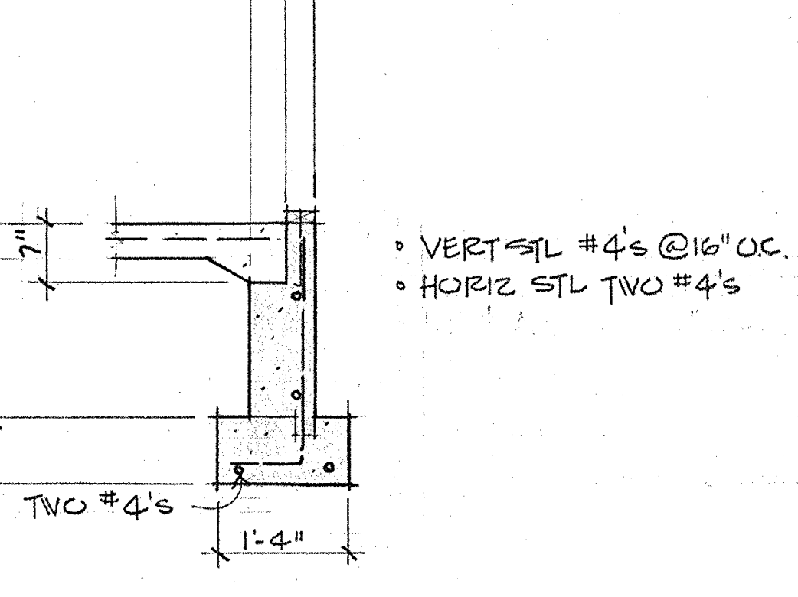
VERT STL #4's @ 16" O.C.
HORIZ STL TWO #4's
TWO #4's
1'-4"

7 FTG @ INTERIOR
10 COURT 1/2"=1'-0"

8 UNASSIGNED
10

FOUNDATION PLAN, DETAILS - SECTOR B

SWEET HOME HIGH SCHOOL
ADDITIONS AND ALTERATIONS 1974
DISTRICT 55 LINN COUNTY, OREGON

ARCHITECTS
HAMLIN, MARTIN,
SCHULTZ & GEYER
AIA
159 W. 12TH EUGENE, OREGON 97401

A
10
JOB NO.

REGISTERED ARCHITECT
CLARE K. HAMLIN
Clare K Hamlin
EUGENE, OREGON
STATE OF OREGON

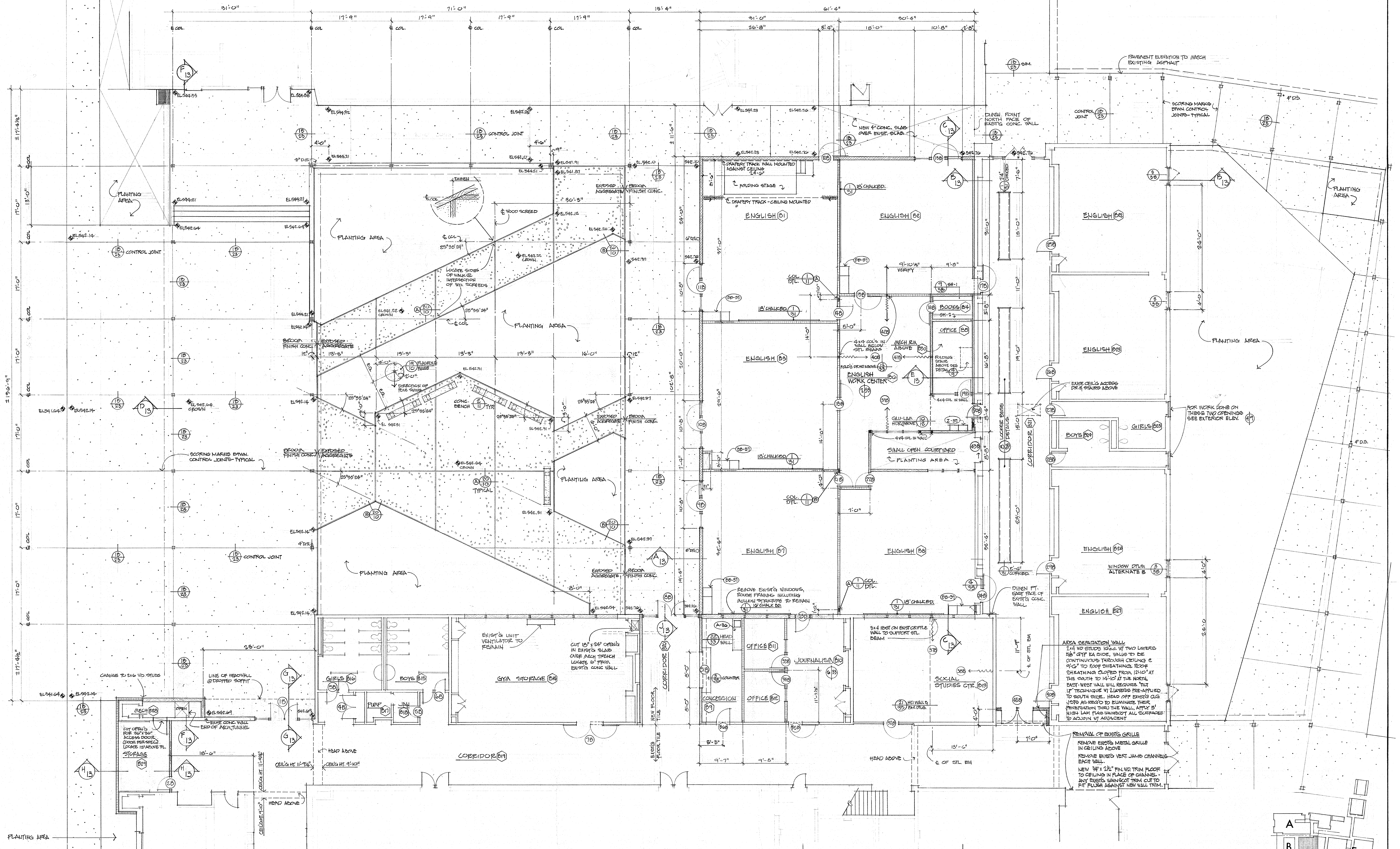
31'-0"
71'-0"
17'-9"
15'-4"
61'-4"
31'-0"
30'-4"
26'-8"
3'-4"
18'-0"
10'-8"
2'-8"
℄ COL.
PLANTING AREA
CONTROL JOINT
EXPOSED AGGREGATE
BROOM FINISH CONC.
DIMEN
℄ WOOD SCREED
LOCATE SIDES OF WALK @ INTERSECTION OF 1/2 SCREEDS
FLAGPOLE BASE
DIRECTION OF POLE SWING
CONC. BENCH
SCORING MARKS BTWN. CONTROL JOINTS-TYPICAL
NEW 4" CONC. SLAB OVER EXIST. SLAB
DIMEN. POINT NORTH FACE OF EXST'G CONC. WALL
PAVEMENT ELEVATION TO MATCH EXISTING ASPHALT
℄ DRAPERY TRACK WALL MOUNTED AGAINST CEILING
24'-6"
℄ FOLDING STAGE
℄ DRAPERY TRACK - CEILING MOUNTED
ENGLISH B1
ENGLISH B2
ENGLISH B3
ENGLISH B7
ENGLISH B8
ENGLISH B22
ENGLISH B23
ENGLISH B26
ENGLISH B27
18' CHALKBD.
16' CHALK BD.
COL. DTL.
9'-10½" VERIFY
9'-8"
BOOKS B4
OFFICE B5
SH-1
SH-2
4x4 COL'S IN WALL BELOW STL BEAMS
MECH. RM ABOVE B30
FOLD'G DR HD ABOVE
FOLDING STAIR ABOVE SEE DETAIL
ENGLISH WORK CENTER B6
4x4 COL IN WALL
GLU-LAM HDR (ABOVE)
SMALL OPEN COURTYARD
PLANTING AREA
LOCKER BASE DETAILS
CORRIDOR B21
BOYS B24
GIRLS B25
EXIST. CEIL'G ACCESS DR. & STAIRS ABOVE
FOR WORK DONE ON THESE TWO OPENINGS SEE EXTERIOR ELEV.
WINDOW DTLS. ALTERNATE B
CORKBD.
DIMEN PT. EAST FACE OF EXIST'G CONC. WALL
REMOVE EXIST'G WINDOWS, ROUGH FRAMING INCLUDING MULLION STRUCTURE TO REMAIN
3x4 POST ON EXIST CRIPPLE WALL TO SUPPORT STL. BEAM
HEAD WALL
COUNTER
CONCESSION B9
OFFICE B11
OFFICE B12
JOURNALISM B10
SOCIAL STUDIES CTR. B13
HD. WALL & BM. DTLS.
℄ OF STL BM
HEAD ABOVE
5'-3"
9'-7"
9'-5"
13'-6"
7'-0"
CORRIDOR B20
NEW FLOOR TILE
EXIST'G FLOOR TILE
EXIST'G UNIT VENTILATOR TO REMAIN
CUT 18" x 24" OPEN'G IN EXIST'G SLAB OVER MECH TRENCH LOCATE 6" FROM EXIST'G CONC WALL
GYM STORAGE B14
GIRLS B16
BOYS B15
PUMP B17
JAN B18
CORRIDOR B19
CHANGE TO 2x6 WD. STUDS
LINE OF HEADWALL @ DROPPED SOFFIT
25'-0"
MECH B28
OPEN
EXIST. CONC. WALL
END OF MECH. TUNNEL
CUT OPEN'G FOR 36"x36" ACCESS DOOR (DOOR PER SPEC.) LOCATE 12" ABOVE FL.
STORAGE B29
18'-6"
CEIL'G HT. 11'-9¼"
CEIL'G HT. 9'-10"
PLANTING AREA
EL 542.14
EL 541.64

AREA SEPARATION WALL

2x4 WD STUDS 16" o.c. W/ TWO LAYERS 5/8" GYP EA SIDE. WALLS TO BE CONTINUOUS THROUGH CEILING @ 9'-6" TO ROOF SHEATHING. ROOF SHEATHING SLOPES FROM 12'-10" AT THE SOUTH TO 14'-10" AT THE NORTH. EAST-WEST WALL WILL REQUIRE "TILT UP" TECHNIQUE W/ 2 LAYERS PRE-APPLIED TO SOUTH SIDE. HEAD OFF EXIST'G CLG JSTS AS REQ'D TO ELIMINATE THEIR PENETRATION THRU THE WALL. APPLY 5' HIGH LAM PLAS WAINSCOT ALL SURFACES TO ADJOIN W/ ADJACENT

REMOVAL OF EXIST'G GRILLE

REMOVE EXIST'G METAL GRILLE IN CEILING ABOVE

REMOVE EXIST'G VERT. JAMB CHANNELS EACH WALL.

NEW 3/4" x 2½" FIN. WD. TRIM FLOOR TO CEILING IN PLACE OF CHANNEL - ANY EXIST'G WAINSCOT TRIM CUT TO FIT FLUSH AGAINST NEW WALL TRIM.

FLOOR PLAN
SECTOR - B
1/8" = 1'-0"

N

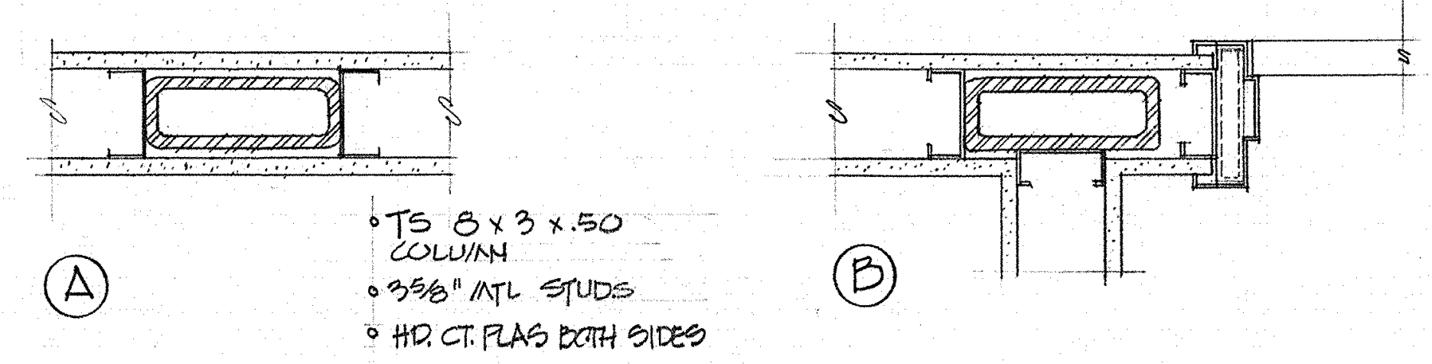
A
B
• TS 8 x 3 x .50 COLUMN
• 3⅝" MTL STUDS
• HD. CT. PLAS BOTH SIDES

1/11 COLUMN IN WALL PLAN DETAIL 1½" = 1'-0"

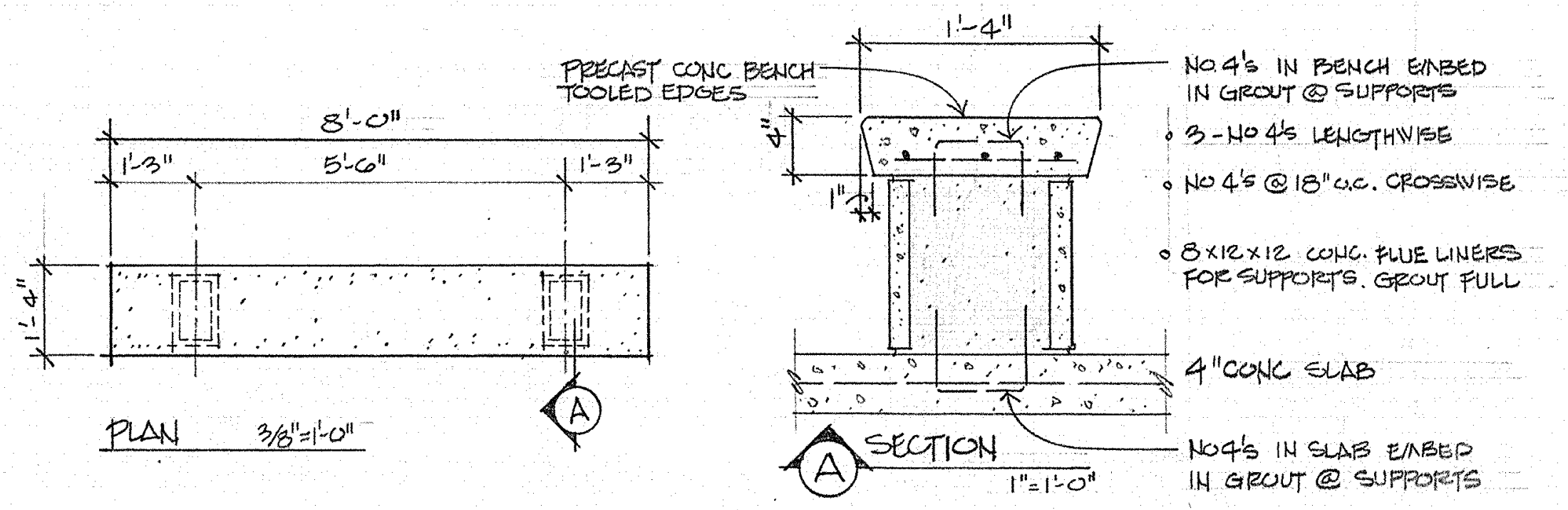
8'-0"
1'-3"
5'-6"
1'-3"
1'-4"
PLAN 3/8" = 1'-0"
A
PRECAST CONC BENCH TOOLED EDGES
1'-4"
4"
1"
NO 4's IN BENCH EMBED IN GROUT @ SUPPORTS
• 3-NO 4's LENGTHWISE
• NO 4's @ 18" o.c. CROSSWISE
• 8x12x12 CONC. FLUE LINERS FOR SUPPORTS. GROUT FULL
4" CONC SLAB
NO 4's IN SLAB EMBED IN GROUT @ SUPPORTS
A SECTION 1" = 1'-0"

2/11 CONCRETE BENCH @ COURTYARD

LEGEND

EXST'G WALL TO REMAIN
NEW WOOD STUD WALL
NEW METAL STUD WALL
NEW BEARING MASONRY
NEW CONCRETE WALL

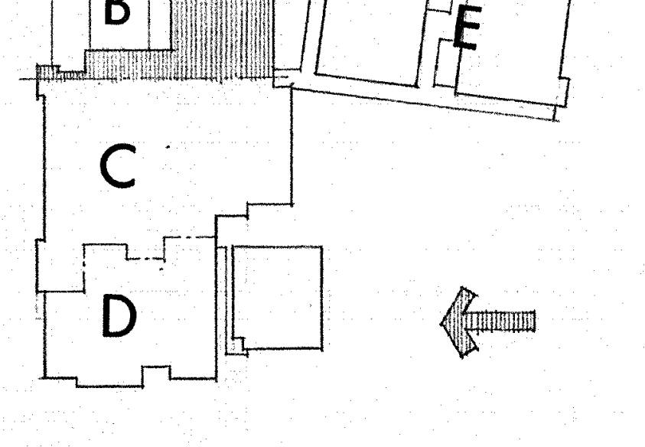

FLOOR PLAN - SECTOR B

SWEET HOME HIGH SCHOOL
ADDITIONS AND ALTERATIONS 1974
DISTRICT 55 LINN COUNTY, OREGON

ARCHITECTS
HAMLIN, MARTIN,
SCHULTZ & GEYER
AIA
159 W. 12TH EUGENE, OREGON 97401

A
11
JOB NO.

REGISTERED ARCHITECT
CLARE K. HAMLIN
Clare K Hamlin
EUGENE, OREGON
STATE OF OREGON

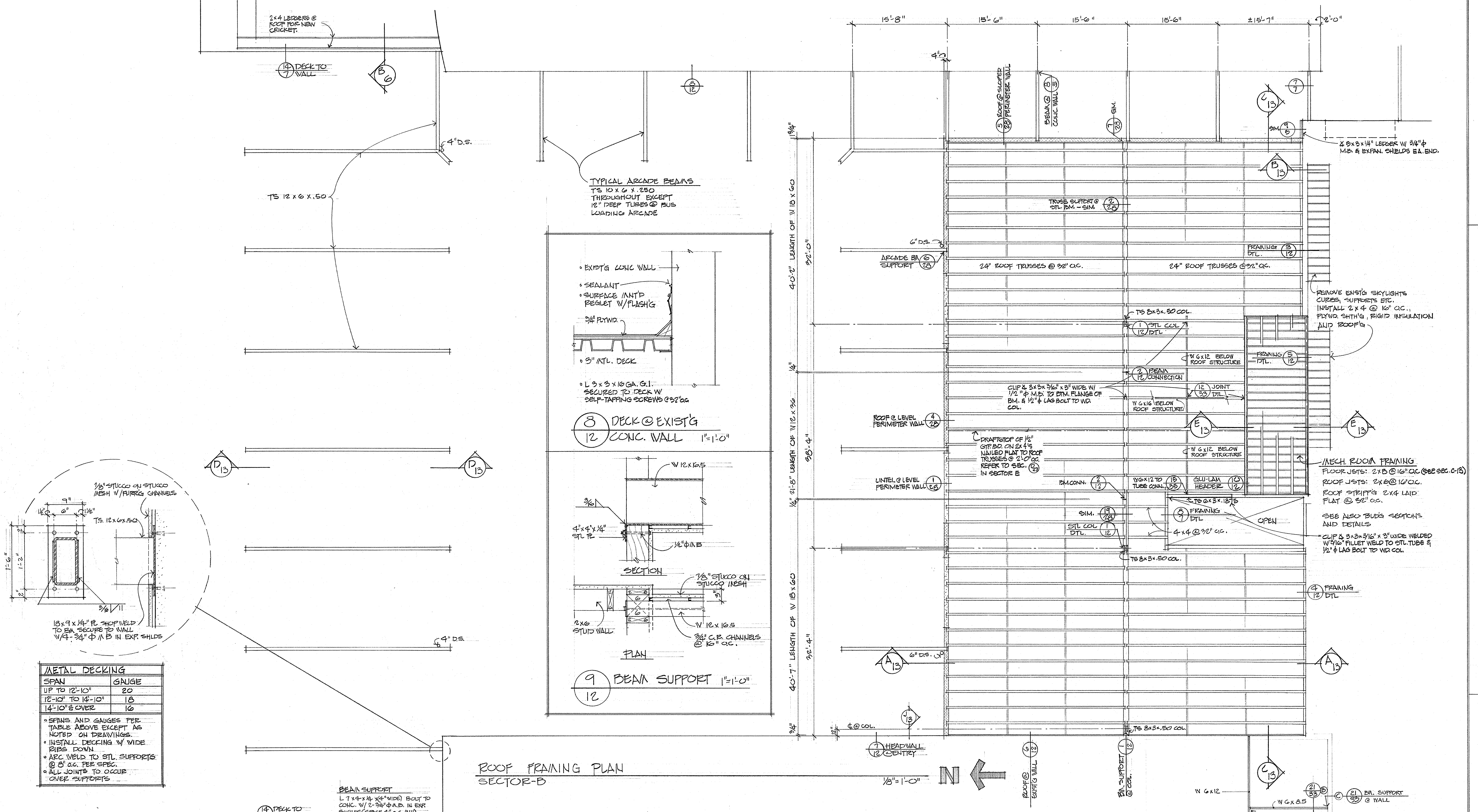
2x4 LEDGERS @ ROOF FOR NEW CRICKET.
14/7 DECK TO WALL
B/6
8/12
4"D.S.
TS 12 x 6 x .50
TYPICAL ARCADE BEAMS
TS 10 x 6 x .250 THROUGHOUT EXCEPT 12" DEEP TUBES @ BUS LOADING ARCADE
15'-8"
15'-6"
15'-6"
15'-6"
±15'-7"
2'-0"
4"
5/28 ROOF @ SLOPED PERIMETER WALL
BEAM @ CONC. WALL 8/5
7/28 SIM.
7/7
C/13
SIM. 9/5
L 5x3x1/4" LEDGER W/ 3/4"ϕ M.B. & EXPAN. SHIELDS EA. END.
B/13
TRUSS SUPPORT @ STL. BM. - SIM. 2/28
6" D.S.
ARCADE BM SUPPORT 6/28
24" ROOF TRUSSES @ 32" O.C.
24" ROOF TRUSSES @ 32" O.C.
FRAMING DTL. 3/12
REMOVE EXIST'G SKYLIGHTS CURBS, SUPPORTS ETC. INSTALL 2x4 @ 16" O.C., PLYWD. SHTH'G, RIGID INSULATION AND ROOF'G
TS 8x3x.50 COL.
1/12 STL COL DTL
FRAMING DTL. 5/12
W 6x12 BELOW ROOF STRUCTURE
2/12 BEAM CONNECTION
CLIP L 3x3x3/16" x 3" WIDE W/ 1/2"ϕ M.B. TO BTM. FLANGE OF BM. & 1/2"ϕ LAG BOLT TO WD. COL.
12/33 JOINT DTL.
W 6x16 BELOW ROOF STRUCTURE
ROOF @ LEVEL PERIMETER WALL 4/28
E/13
E/13
DRAFTSTOP OF 1/2" GYP. BD. ON 2x4'S NAILED FLAT TO ROOF TRUSSES @ 2'-0" O.C. REFER TO SEC. D/27 IN SECTOR E
W 6x12 BELOW ROOF STRUCTURE
MECH. ROOM FRAMING
FLOOR JSTS: 2x8 @ 16" O.C. (SEE SEC. C-13)
ROOF JSTS: 2x6 @ 16" O.C.
ROOF STRIPP'G 2x4 LAID FLAT @ 32" O.C.
SEE ALSO BLD'G SECTIONS AND DETAILS
LINTEL @ LEVEL PERIMETER WALL 1/28
BM. CONN. 2/12
W6x12 TO TUBE CONN. 15/35
GLU-LAM HEADER 10/12
TS 6x3x.1875
SIM. 19/28
8/7 FRAMING DTL
OPEN
STL COL DTL. 1/12
4x4 @ 32" O.C.
CLIP L 3x3x3/16" x 3" WIDE WELDED W/ 3/16" FILLET WELD TO STL. TUBE & 1/2"ϕ LAG BOLT TO WD. COL.
TS 8x3x.50 COL.
4/12 FRAMING DTL
13/4"
40'-2" LENGTH OF W 18 x 60
32'-0"
1/4"
1/4" 21'-8" LENGTH OF W 12 x 36
38'-4"
40'-7" LENGTH OF W 18 x 60
32'-4"
3/4"
12"
6" D.S.
A/13
A/13
J/13
℄ @ COL.
7/12 HEADWALL @ ENTRY
TS 8x3x.50 COL.
D/13
D/13
4" D.S.
1/8" STUCCO ON STUCCO MESH W/ FURR'G CHANNELS
9"
6"
1 1/2"
1 1/2"
TS. 12 x 6 x .50
1'-6"
1'-2"
2"
2"
3/16 / 11
18 x 9 x 1/4" PL SHOP WELD TO BM SECURE TO WALL W/ 4-3/4"ϕ M B IN EXP. SHLDS
ROOF FRAMING PLAN
SECTOR-B
1/8" = 1'-0"
N
ROOF @ EXIST'G WALL 6/12
BM. SUPPORT @ COL. 1/12
C/13
W 6x12
W 6x8.5
21/33 B
C 21/33 BM. SUPPORT @ WALL
A 21/33 FRAMING DTL.
BM. SUPPORT @ WALL 21/33 C

METAL DECKING	
SPAN	GAUGE
UP TO 12'-10"	20
12'-10" TO 14'-10"	18
14'-10" & OVER	16

- SPANS AND GAUGES PER TABLE ABOVE EXCEPT AS NOTED ON DRAWINGS.
- INSTALL DECKING W/ WIDE RIBS DOWN.
- ARC WELD TO STL. SUPPORTS @ 8" O.C. PER SPEC.
- ALL JOINTS TO OCCUR OVER SUPPORTS

• EXIST'G CONC WALL
• SEALANT
• SURFACE MNT'D REGLET W/FLASH'G
3/4" PLYWD.
• 3" MTL. DECK
• L 3 x 3 x 16 GA. G.I. SECURED TO DECK W/ SELF-TAPPING SCREWS @ 32" O.C.

8/12 DECK @ EXIST'G CONC. WALL 1"=1'-0"

W 12 x 16.5
3/16
4"x4"x1/4" STL PL
1/2"ϕ M B
SECTION
1/8" STUCCO ON STUCCO MESH
3"
2x6 STUD WALL
W 12 x 16.5
3/4" C.R. CHANNELS @ 16" O.C.
PLAN

9/12 BEAM SUPPORT 1"=1'-0"

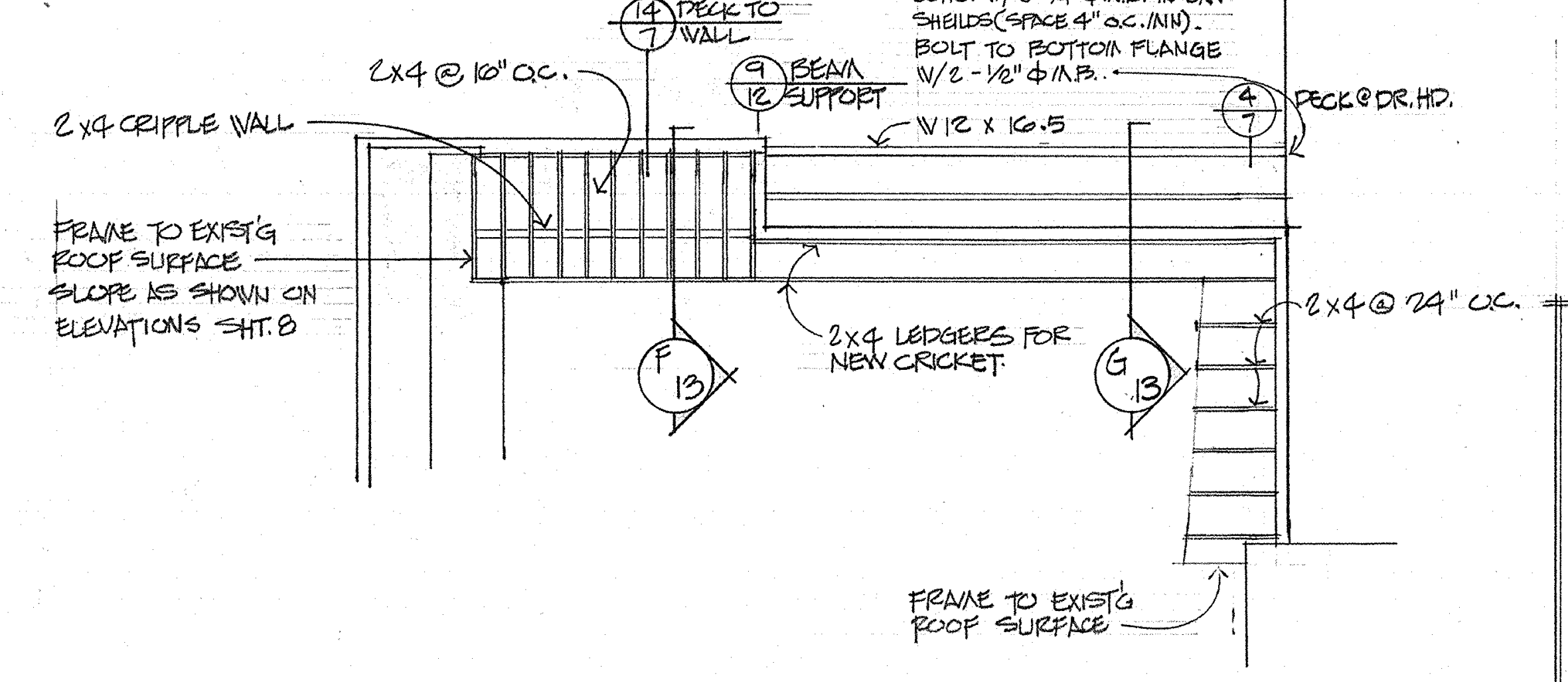
BEAM SUPPORT
L 7x4x1/4 x(4" WIDE) BOLT TO CONC. W/ 2-3/4"ϕ M.B. IN EXP. SHEILDS (SPACE 4" O.C. MIN). BOLT TO BOTTOM FLANGE W/ 2 - 1/2"ϕ M.B.
14/7 DECK TO WALL
2x4 @ 16" O.C.
9/12 BEAM SUPPORT
4/7 DECK @ DR. HD.
2x4 CRIPPLE WALL
W 12 x 16.5
FRAME TO EXIST'G ROOF SURFACE SLOPE AS SHOWN ON ELEVATIONS SHT. 8
2x4 LEDGERS FOR NEW CRICKET
F/13
G/13
2x4 @ 24" O.C.
FRAME TO EXIST'G ROOF SURFACE

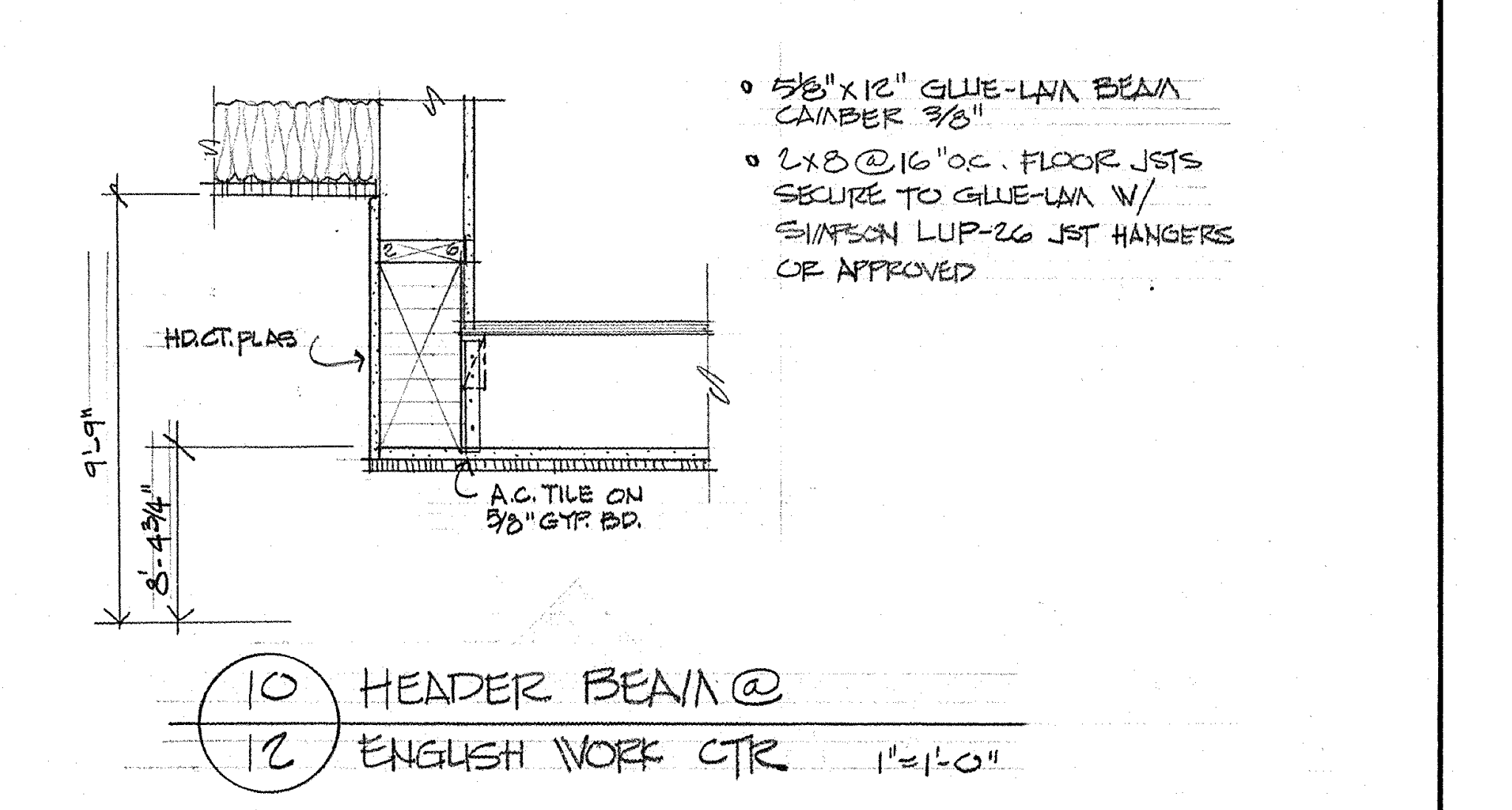
• 5/8" x 12" GLUE-LAM BEAM CAMBER 3/8"
• 2x8 @ 16" O.C. FLOOR JSTS SECURE TO GLUE-LAM W/ SIMPSON LUP-26 JST HANGERS OR APPROVED
HD. CT. PLAS
9'-9"
8'-4 3/4"
A.C. TILE ON 5/8" GYP. BD.

10/12 HEADER BEAM @ ENGLISH WORK CTR 1"=1'-0"

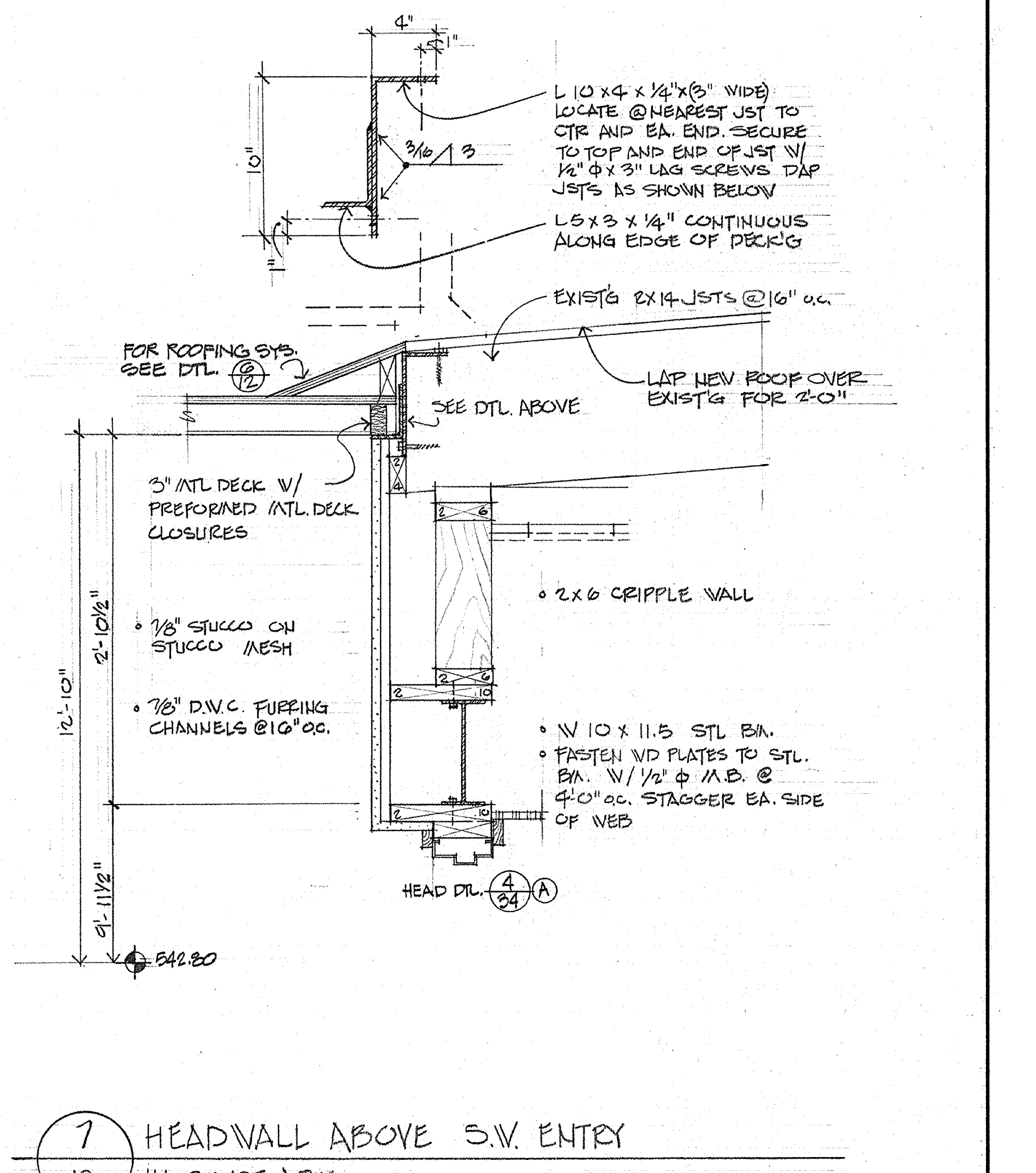
4"
1"
10"
3/16 / 3
L 10 x 4 x 1/4" x (3" WIDE) LOCATE @ NEAREST JST TO CTR AND EA. END. SECURE TO TOP AND END OF JST W/ 1/2"ϕ x 3" LAG SCREWS. DAP JSTS AS SHOWN BELOW
L 5 x 3 x 1/4" CONTINUOUS ALONG EDGE OF DECK'G
EXIST'G 2x14 JSTS @ 16" O.C.
FOR ROOFING SYS. SEE DTL. 6/12
SEE DTL. ABOVE
LAP NEW ROOF OVER EXIST'G FOR 2'-0"
3" MTL DECK W/ PREFORMED MTL. DECK CLOSURES
• 2x6 CRIPPLE WALL
• 7/8" STUCCO ON STUCCO MESH
• 7/8" D.W.C. FURRING CHANNELS @ 16" O.C.
• W 10 x 11.5 STL BM.
• FASTEN WD PLATES TO STL. BM. W/ 1/2"ϕ M.B. @ 4'-0" O.C. STAGGER EA. SIDE OF WEB
12'-10"
2'-10 1/2"
9'-11 1/2"
HEAD DTL. 4/34 A
542.80

7/12 HEADWALL ABOVE S.W. ENTRY IN COURT AREA. 1"=1'-0"

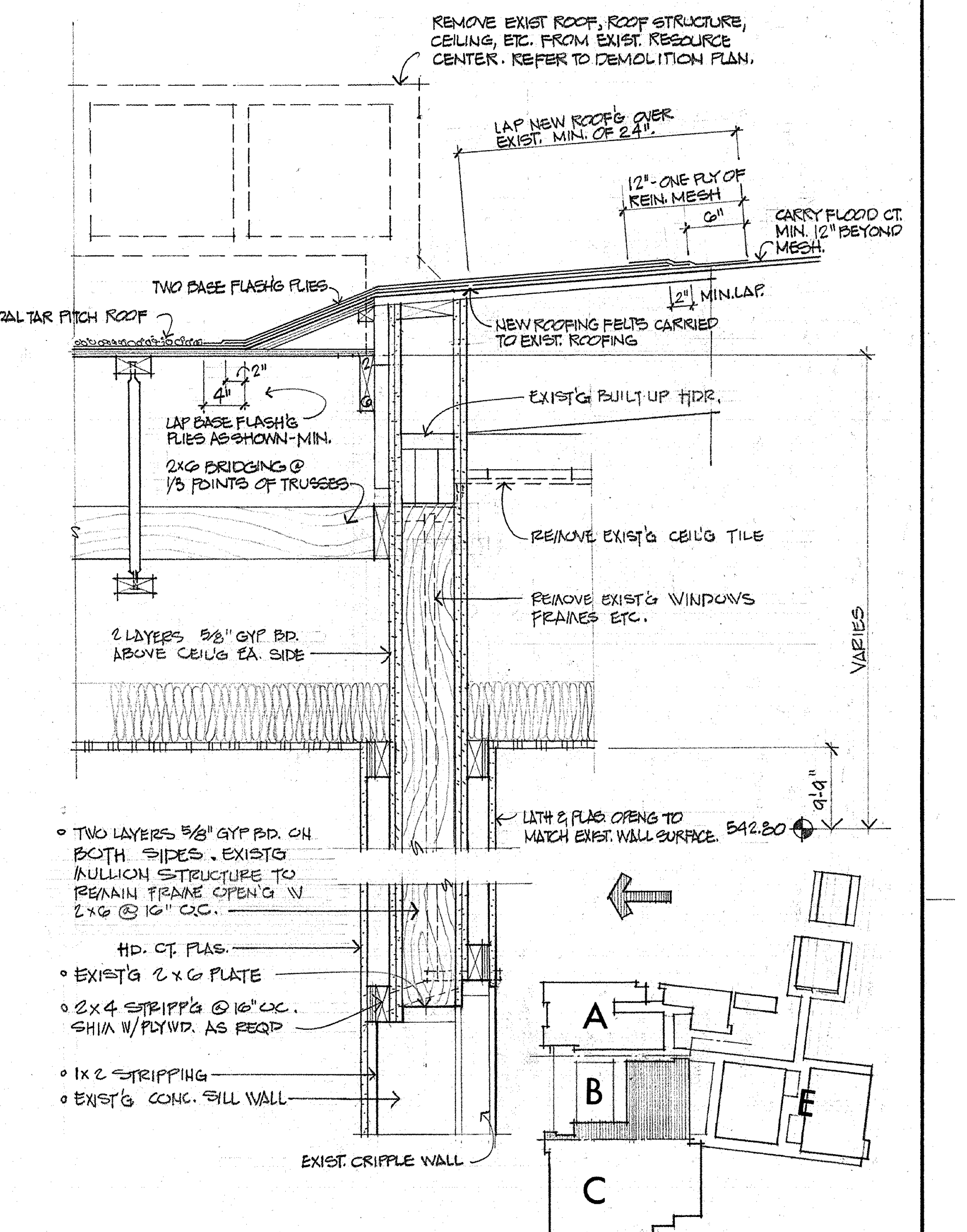
REMOVE EXIST ROOF, ROOF STRUCTURE, CEILING, ETC. FROM EXIST. RESOURCE CENTER. REFER TO DEMOLITION PLAN.
LAP NEW ROOF'G OVER EXIST. MIN. OF 24".
12" - ONE PLY OF REIN. MESH
6"
CARRY FLOOD CT. MIN. 12" BEYOND MESH.
TWO BASE FLASH'G PLIES
COAL TAR PITCH ROOF
2" MIN. LAP
NEW ROOFING FELTS CARRIED TO EXIST. ROOFING
4"
2"
LAP BASE FLASH'G PLIES AS SHOWN - MIN.
EXIST'G BUILT UP HDR.
2x6 BRIDGING @ 1/3 POINTS OF TRUSSES
REMOVE EXIST'G CEIL'G TILE
REMOVE EXIST'G WINDOWS FRAMES ETC.
2 LAYERS 5/8" GYP BD. ABOVE CEIL'G EA. SIDE
VARIES
LATH & PLAS. OPEN'G TO MATCH EXIST. WALL SURFACE.
542.80
9'-9"
• TWO LAYERS 5/8" GYP BD. ON BOTH SIDES. EXIST'G MULLION STRUCTURE TO REMAIN FRAME OPEN'G W/ 2x6 @ 16" O.C.
HD. CT. PLAS.
• EXIST'G 2x6 PLATE
• 2x4 STRIPP'G @ 16" O.C. SHIM W/ PLYWD. AS REQ'D
• 1x2 STRIPPING
• EXIST'G CONC. SILL WALL
EXIST. CRIPPLE WALL
A
B
C
D
E

6/12 ROOF & WALL COND. @ EXIST'G WEST WALL 1"=1'-0"

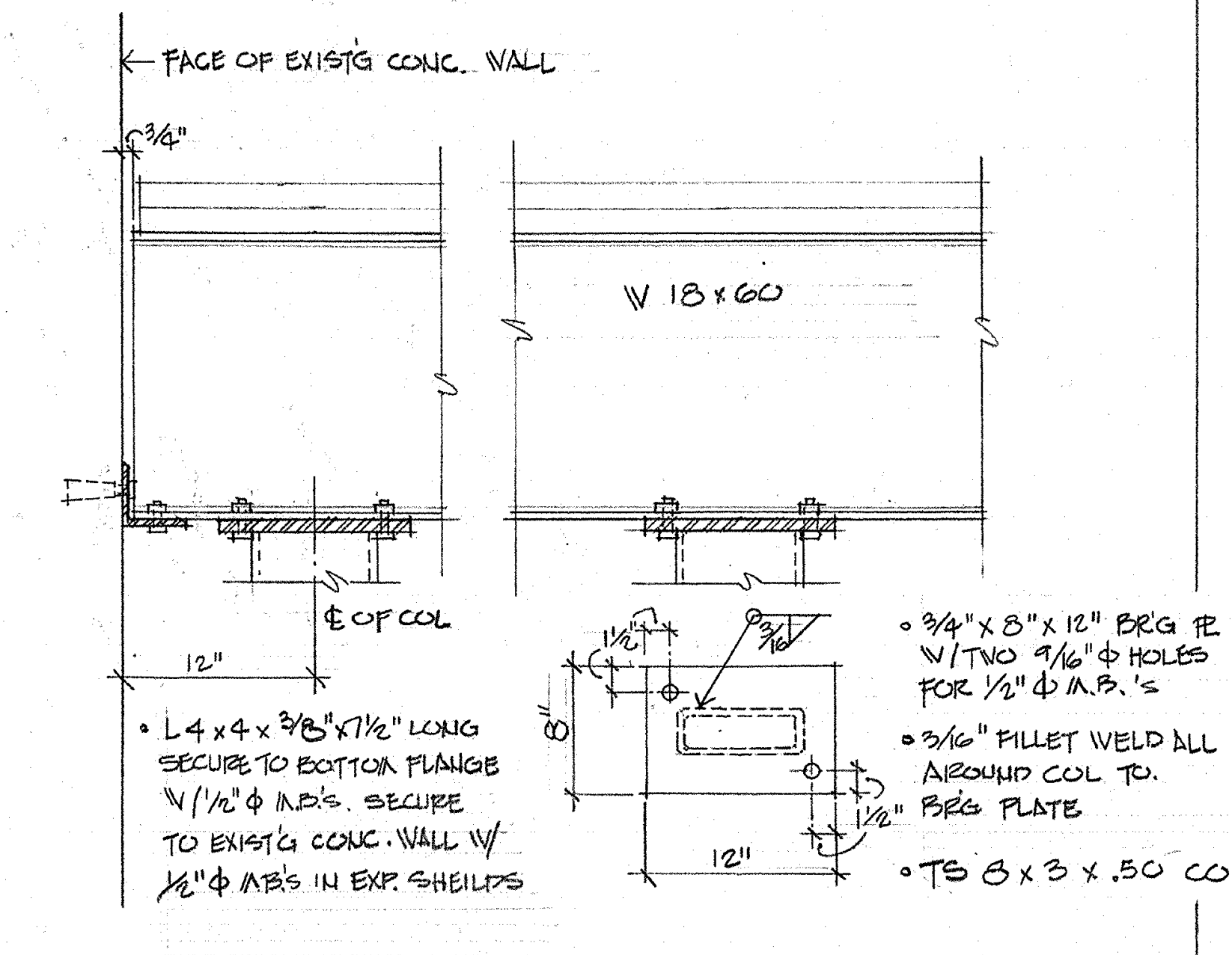
FACE OF EXIST'G CONC. WALL
3/4"
W 18 x 60
℄ OF COL
12"
1 1/2"
8"
3/16
1/2"
12"
• L 4 x 4 x 3/8" x 7 1/2" LONG SECURE TO BOTTOM FLANGE W/ 1/2"ϕ M.B.'S. SECURE TO EXIST'G CONC. WALL W/ 1/2"ϕ M.B.'S IN EXP. SHEILDS
• 3/4" x 8" x 12" BR'G PL W/ TWO 9/16"ϕ HOLES FOR 1/2"ϕ M.B.'s
• 3/16" FILLET WELD ALL AROUND COL TO. BR'G PLATE
• TS 8 x 3 x .50 COL.

1/12 STEEL BEAM SUPPORT @ COLUMNS 1"=1'-0"

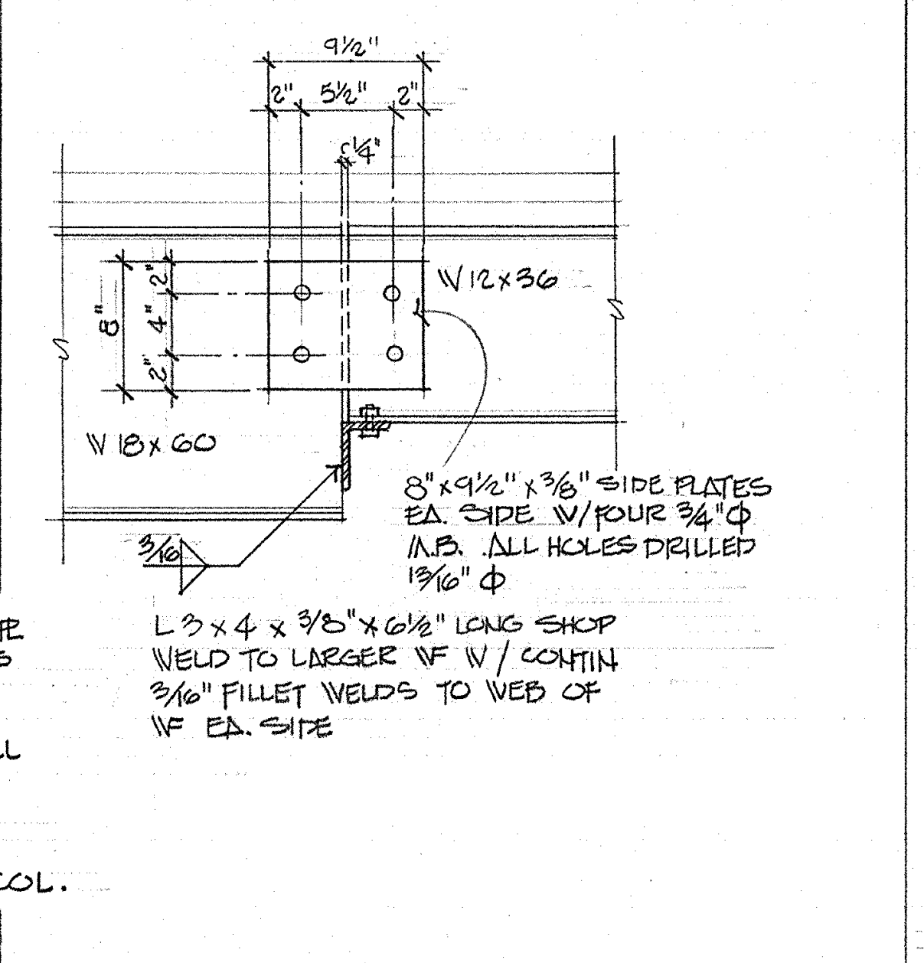
9 1/2"
2"
5 1/2"
2"
1/4"
8"
2"
4"
2"
W 12 x 36
W 18 x 60
8" x 9 1/2" x 3/8" SIDE PLATES EA. SIDE W/ FOUR 3/4"ϕ M.B. ALL HOLES DRILLED 13/16"ϕ
3/16
L 3 x 4 x 3/8" x 6 1/2" LONG SHOP WELD TO LARGER WF W/ CONTIN 3/16" FILLET WELDS TO WEB OF WF EA. SIDE

2/12 BEAM TO BEAM SUPPORT 1"=1'-0"

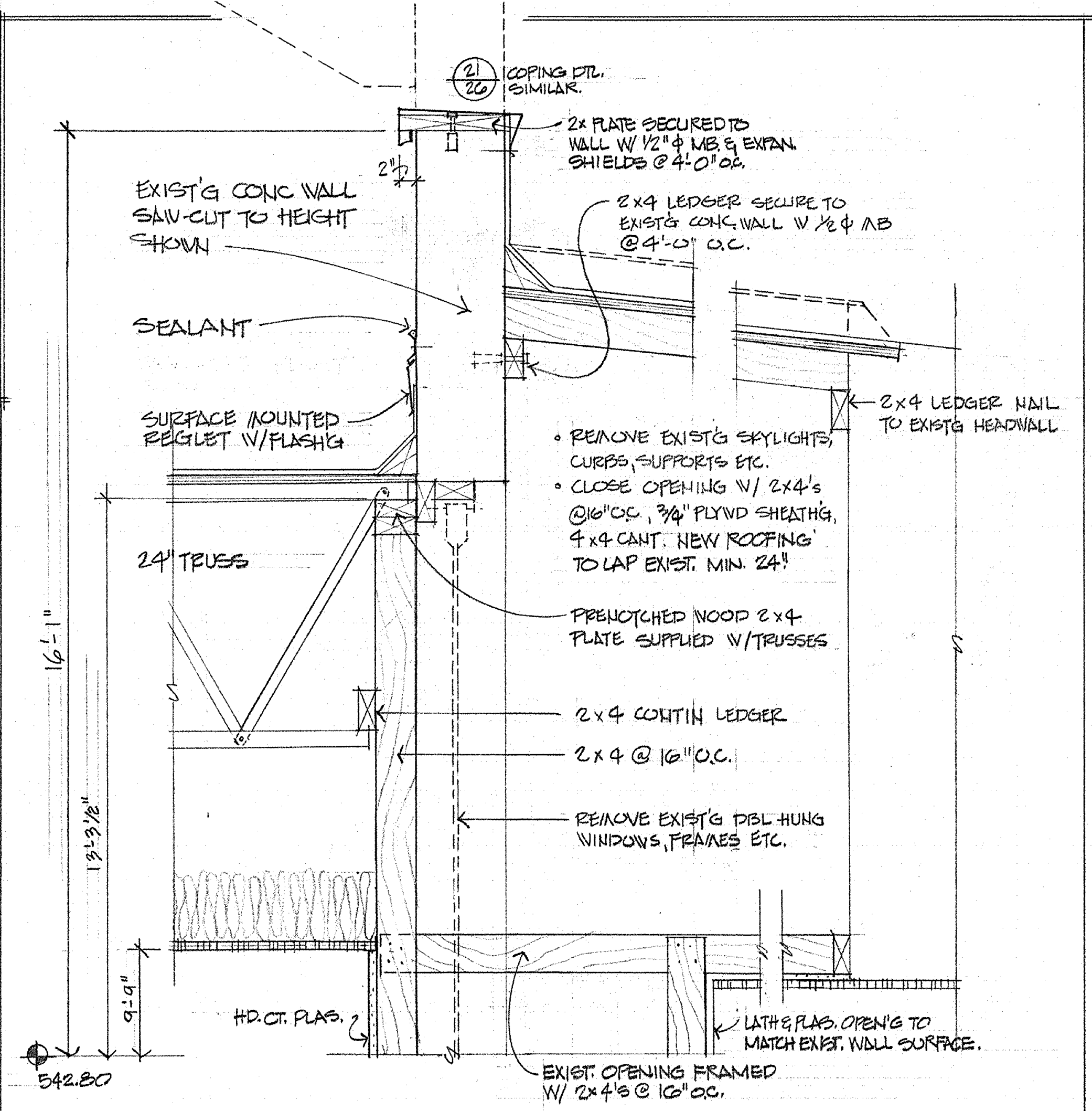
21/26 COPING DTL. SIMILAR.
2x PLATE SECURED TO WALL W/ 1/2"ϕ MB. & EXPAN. SHIELDS @ 4'-0" O.C.
2 1/2"
EXIST'G CONC WALL SAW-CUT TO HEIGHT SHOWN
2x4 LEDGER SECURE TO EXIST'G CONC. WALL W/ 1/2ϕ MB @ 4'-0" O.C.
SEALANT
SURFACE MOUNTED REGLET W/FLASH'G
2x4 LEDGER NAIL TO EXIST'G HEADWALL
• REMOVE EXIST'G SKYLIGHTS, CURBS, SUPPORTS ETC.
• CLOSE OPENING W/ 2x4's @ 16" O.C., 3/4" PLYWD SHEATH'G, 4x4 CANT. NEW ROOFING TO LAP EXIST. MIN. 24"
24" TRUSS
PRENOTCHED WOOD 2x4 PLATE SUPPLIED W/TRUSSES
16'-1"
2x4 CONTIN LEDGER
2x4 @ 16" O.C.
REMOVE EXIST'G DBL HUNG WINDOWS, FRAMES ETC.
13'-3 1/2"
9'-9"
HD. CT. PLAS.
LATH & PLAS. OPEN'G TO MATCH EXIST. WALL SURFACE.
542.80
EXIST. OPENING FRAMED W/ 2x4's @ 16" O.C.

3/12 TRUSS SUPPORT @ EXIST'G CONC. WALL & SKYLIGHT CLOSURE DTL. 1"=1'-0"

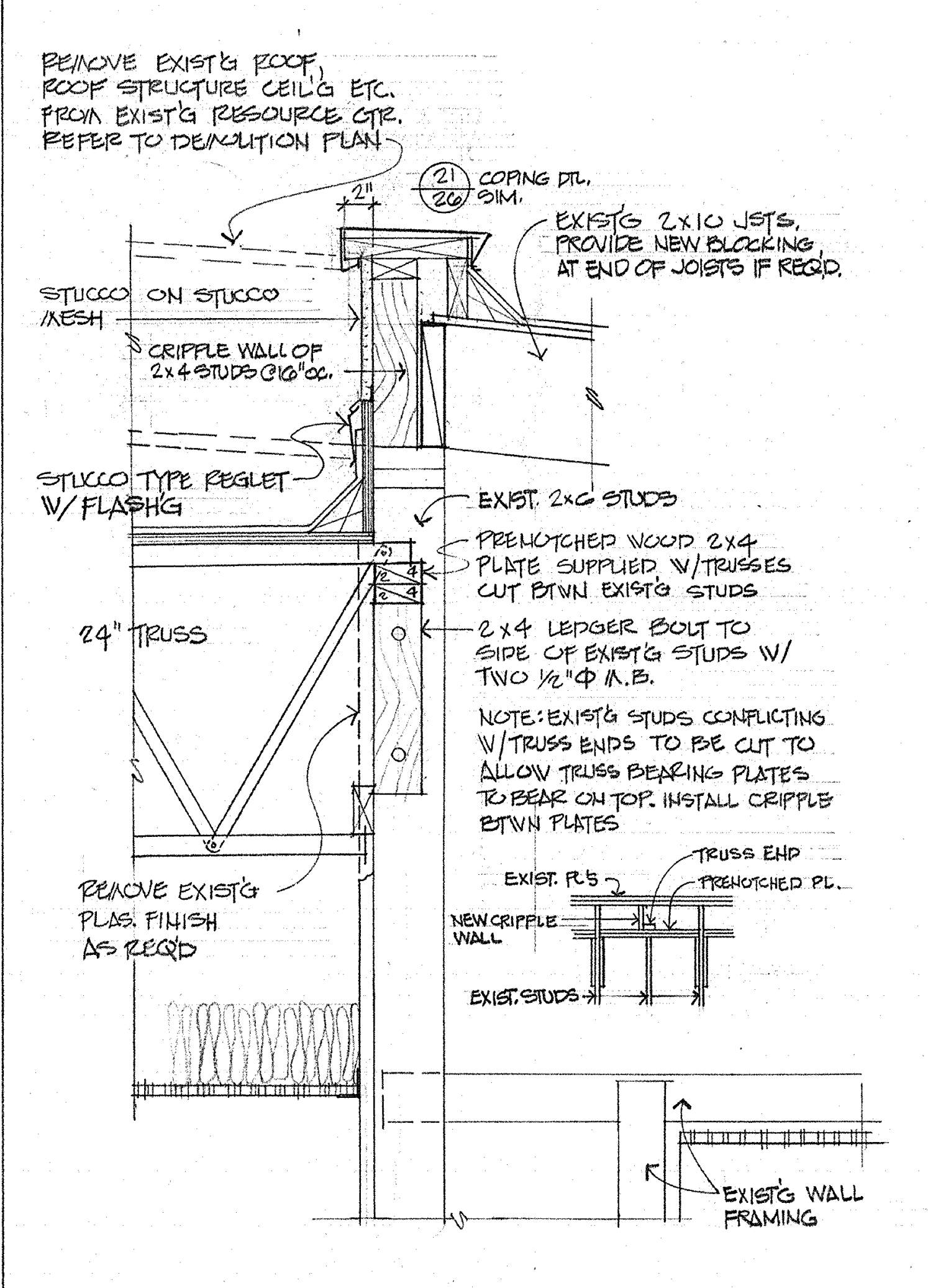
REMOVE EXIST'G ROOF, ROOF STRUCTURE CEIL'G ETC. FROM EXIST'G RESOURCE CTR. REFER TO DEMOLITION PLAN
21/26 COPING DTL. SIM.
2"
EXIST'G 2x10 JSTS. PROVIDE NEW BLOCKING AT END OF JOISTS IF REQ'D.
STUCCO ON STUCCO MESH
CRIPPLE WALL OF 2x4 STUDS @ 16" O.C.
STUCCO TYPE REGLET W/ FLASH'G
EXIST. 2x6 STUDS
PRENOTCHED WOOD 2x4 PLATE SUPPLIED W/TRUSSES CUT BTWN EXIST'G STUDS
24" TRUSS
2x4 LEDGER BOLT TO SIDE OF EXIST'G STUDS W/ TWO 1/2"ϕ M.B.
NOTE: EXIST'G STUDS CONFLICTING W/TRUSS ENDS TO BE CUT TO ALLOW TRUSS BEARING PLATES TO BEAR ON TOP. INSTALL CRIPPLE BTWN PLATES
REMOVE EXIST'G PLAS. FINISH AS REQ'D
EXIST. PL'S
TRUSS END
PRENOTCHED PL.
NEW CRIPPLE WALL
EXIST. STUDS
EXIST'G WALL FRAMING

4/12 TRUSS SUPPORT @ EXIST'G FRAME WALL 1"=1'-0"

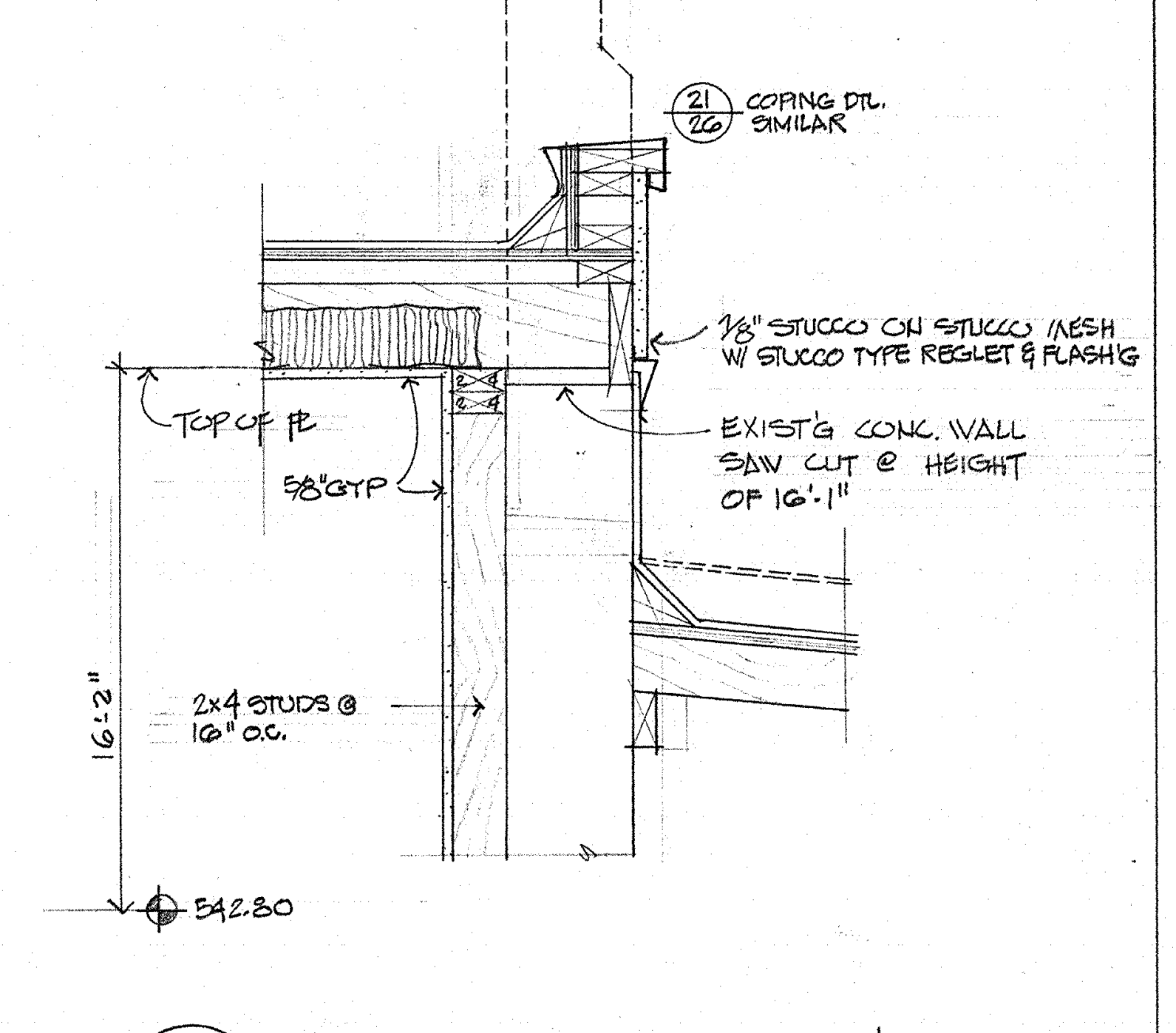
21/26 COPING DTL. SIMILAR
1/8" STUCCO ON STUCCO MESH W/ STUCCO TYPE REGLET & FLASH'G
TOP OF PL
5/8" GYP
EXIST'G CONC. WALL SAW CUT @ HEIGHT OF 16'-1"
16'-2"
2x4 STUDS @ 16" O.C.
542.80

5/12 MECH. RM ROOF @ EXIST'G CONC. WALL 1"=1'-0"

ROOF FRAMING PLAN, DETAILS - SECTOR B

SWEET HOME HIGH SCHOOL
ADDITIONS AND ALTERATIONS 1974
DISTRICT 55 LINN COUNTY, OREGON

ARCHITECTS
HAMLIN, MARTIN, SCHULTZ & GEYER
AIA
159 W. 12TH EUGENE, OREGON 97401

A
12
JOB NO.

REGISTERED ARCHITECT
CLARE K. HAMLIN
Clare K Hamlin
EUGENE, OREGON
STATE OF OREGON

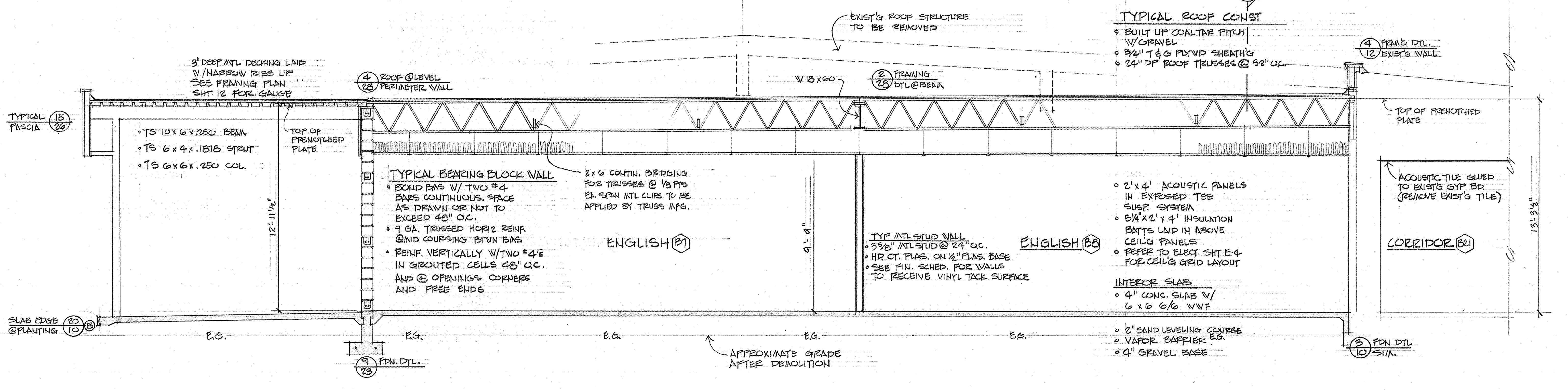
TYPICAL FASCIA 15/26
SLAB EDGE @PLANTING 20/10
3" DEEP MTL DECKING LAID W/NARROW RIBS UP SEE FRAMING PLAN SHT 12 FOR GAUGE
• TS 10×6×.250 BEAM
• TS 6×4×.1878 STRUT
• TS 6×6×.250 COL.
TOP OF PRENOTCHED PLATE
4/28 ROOF @LEVEL PERIMETER WALL
12'-11½"
TYPICAL BEARING BLOCK WALL
• BOND BMS W/ TWO #4 BARS CONTINUOUS. SPACE AS DRAWN OR NOT TO EXCEED 48" O.C.
• 9 GA. TRUSSED HORIZ REINF. @2ND COURSING BTWN BMS
• REINF. VERTICALLY W/TWO #4'S IN GROUTED CELLS 48" O.C. AND @ OPENINGS CORNERS AND FREE ENDS
2×6 CONTIN. BRIDGING FOR TRUSSES @ ⅓ PTS EA. SPAN MTL CLIPS TO BE APPLIED BY TRUSS MFG.
ENGLISH B7
9'-4"
EXIST'G ROOF STRUCTURE TO BE REMOVED
W18×60
2/28 FRAMING DTL @BEAM
TYP MTL STUD WALL
• 3⅝" MTL STUD @ 24" O.C.
• HD CT. PLAS. ON ½" PLAS. BASE
• SEE FIN. SCHED. FOR WALLS TO RECEIVE VINYL TACK SURFACE
ENGLISH B8
C/13
TYPICAL ROOF CONST
• BUILT UP COALTAR PITCH W/GRAVEL
• ¾" T&G PLYWD SHEATH'G
• 24" DP ROOF TRUSSES @ 32" O.C.
• 2'×4' ACOUSTIC PANELS IN EXPOSED TEE SUSP. SYSTEM
• 5¼"×2'×4' INSULATION BATTS LAID IN ABOVE CEIL'G PANELS
• REFER TO ELECT. SHT E-4 FOR CEIL'G GRID LAYOUT
INTERIOR SLAB
• 4" CONC. SLAB W/ 6×6 6/6 WWF
• 2" SAND LEVELING COURSE
• VAPOR BARRIER
• 4" GRAVEL BASE
4/12 FRM'G DTL. EXIST'G WALL
TOP OF PRENOTCHED PLATE
ACOUSTIC TILE GLUED TO EXIST'G GYP BD. (REMOVE EXIST'G TILE)
CORRIDOR B21
13'-3⅛"
E.G.
9/23 FDN. DTL.
APPROXIMATE GRADE AFTER DEMOLITION
3/10 FDN DTL SIM.

A/13 SECTION LOOKING EAST THRU ENGLISH CLASSRM WING 1/4"=1'-0"

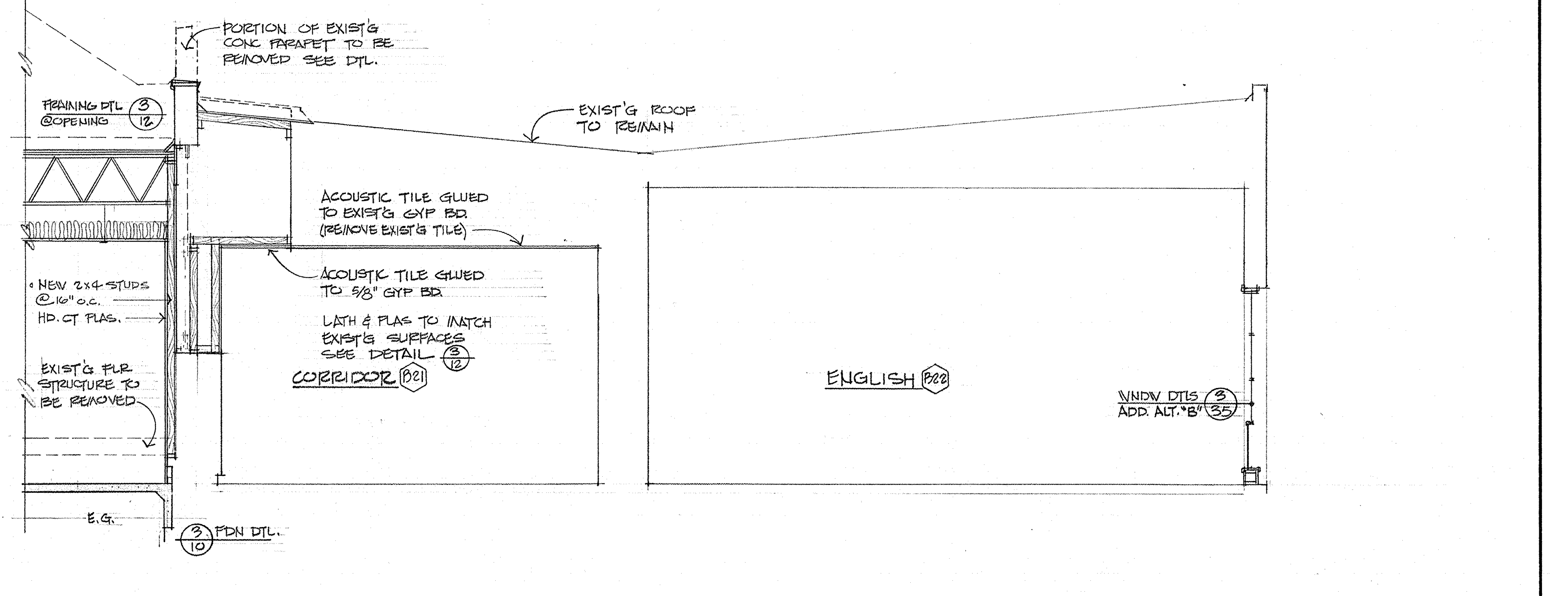
PORTION OF EXIST'G CONC PARAPET TO BE REMOVED SEE DTL.
FRAMING DTL @OPENING 3/12
EXIST'G ROOF TO REMAIN
ACOUSTIC TILE GLUED TO EXIST'G GYP BD. (REMOVE EXIST'G TILE)
ACOUSTIC TILE GLUED TO ⅝" GYP BD.
LATH & PLAS TO MATCH EXIST'G SURFACES SEE DETAIL 3/12
• NEW 2×4 STUDS @16" o.c.
HD. CT PLAS.
EXIST'G FLR STRUCTURE TO BE REMOVED
13'-3⅛"
CORRIDOR B21
ENGLISH B22
WNDW DTLS ADD. ALT. "B" 3/35
E.G.
3/10 FDN DTL.

B/13 SECTION LOOKING EAST THRU EXIST'G ENGLISH CLASSRM WING 1/4"=1'-0"

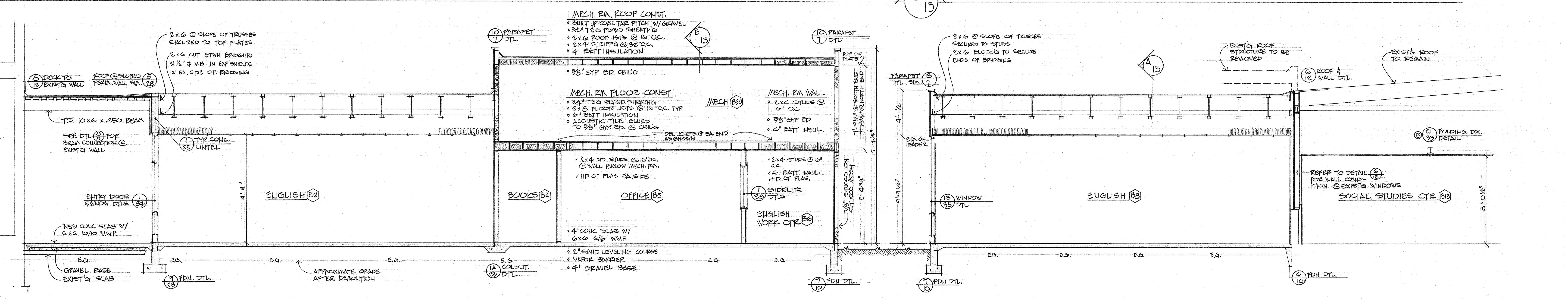
8/12 DECK TO EXIST'G WALL
ROOF @SLOPED PERIM. WALL SIM. 5/28
2×6 @ SLOPE OF TRUSSES SECURED TO TOP PLATES
2×6 CUT BTWN BRIDGING W ½" φ MB IN EXP SHIELDS 12" EA. SIDE OF BRIDGING
T.S. 10×6×.250 BEAM
SEE DTL 8/5 FOR BEAM CONNECTION @ EXIST'G WALL
1/25 TYP CONC. LINTEL
ENTRY DOOR & WNDW DTLS 1/34
NEW CONC SLAB W/ 6×6 10/10 W.W.F.
GRAVEL BASE
EXIST'G SLAB
9/23 FDN. DTL.
ENGLISH B2
9'-4"
APPROXIMATE GRADE AFTER DEMOLITION
10/7 PARAPET DTL.
MECH. RM. ROOF CONST.
• BUILT UP COAL TAR PITCH W/GRAVEL
• ¾" T&G PLYWD SHEATH'G
• 2×6 ROOF JSTS @ 16" O.C.
• 2×4 STRIPP'G @ 32" O.C.
• 4" BATT INSULATION
E/13
• ⅝" GYP BD CEIL'G
MECH. RM FLOOR CONST
• ¾" T&G PLYWD SHEATH'G
• 2×8 FLOOR JSTS @ 16" O.C. TYP.
• 6" BATT INSULATION
• ACOUSTIC TILE GLUED TO ⅝" GYP. BD. @ CEIL'G
DBL JOISTS @ EA. END AS SHOWN
MECH B30
MECH. RM WALL
• 2×4 STUDS @ 16" O.C.
• ⅝" GYP BD
• 4" BATT INSUL.
10/7 PARAPET DTL
TOP OF PLATE
7'-9¼" @ SOUTH END
7'-8½" @ NORTH END
17'-4¼"
• 2×4 WD. STUDS @ 16" O.C. @ WALL BELOW MECH. RM.
• HP CT PLAS. EA. SIDE
• 2×4 STUDS @ 16" O.C.
• 4" BATT INSUL.
• HD CT PLAS.
BOOKS B4
OFFICE B5
1/33 SIDELITE DTLS
ENGLISH WORK CTR B6
⅞" STUCCO ON STUCCO MESH
8'-4¾"
• 4" CONC SLAB W/ 6×6 6/6 WWF
• 2" SAND LEVELING COURSE
• VAPOR BARRIER
• 4" GRAVEL BASE
1A/23 COLD JT. DTL.
E.G.
7/10 FDN DTL.
PARAPET DTL. SIM. 3/7
2×6 @ SLOPE OF TRUSSES SECURED TO STUDS
2×6 BLOCK'G TO SECURE ENDS OF BRIDGING
A/13
4'-1¼"
BTM OF HEADER
9'-9¼"
EXIST'G ROOF STRUCTURE TO BE REMOVED
6/12 ROOF & WALL DTL.
EXIST'G ROOF TO REMAIN
B 21/33 FOLDING DR. DETAIL
13/35 WINDOW DTL
ENGLISH B8
REFER TO DETAIL 6/12 FOR WALL CONDITION @EXIST'G WINDOWS
SOCIAL STUDIES CTR B13
8'-0½"
4/10 FDN DTL.
7/10 FDN DTL.

C/13 SECTION LOOKING SOUTH THRU ENGLISH CLASSRM WING 1/4"=1'-0"

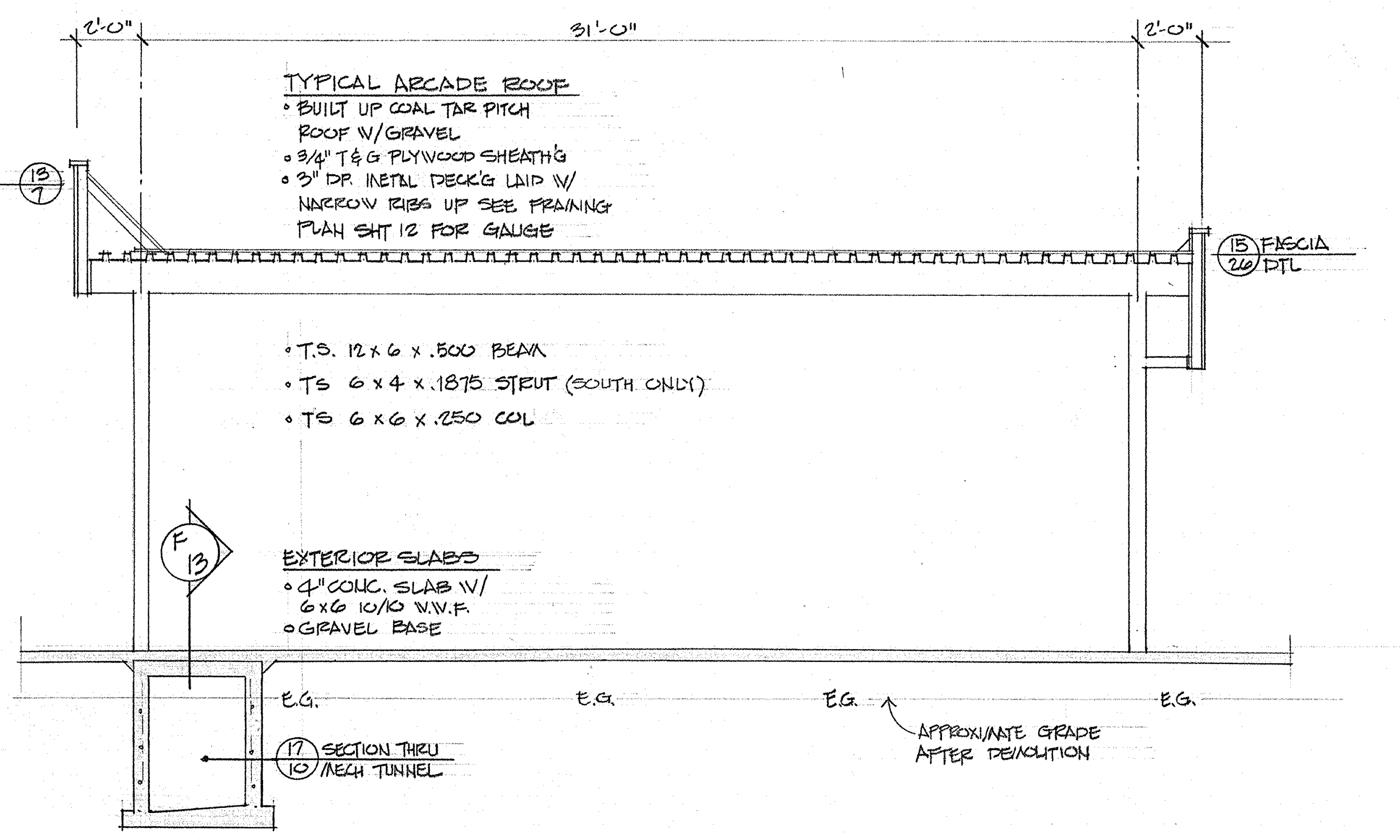
2'-0"
31'-0"
2'-0"
FASCIA DTL. 13/7
TYPICAL ARCADE ROOF
• BUILT UP COAL TAR PITCH ROOF W/GRAVEL
• ¾" T&G PLYWOOD SHEATH'G
• 3" DP. METAL DECK'G LAID W/ NARROW RIBS UP SEE FRAMING PLAN SHT 12 FOR GAUGE
15/26 FASCIA DTL
• T.S. 12×6×.500 BEAM
• TS 6×4×.1875 STRUT (SOUTH ONLY)
• TS 6×6×.250 COL
F/13
EXTERIOR SLABS
• 4" CONC. SLAB W/ 6×6 10/10 W.W.F.
• GRAVEL BASE
E.G.
17/10 SECTION THRU MECH TUNNEL
APPROXIMATE GRADE AFTER DEMOLITION

D/13 ARCADE AT BUS LOADING AREA 1/4"=1'-0"

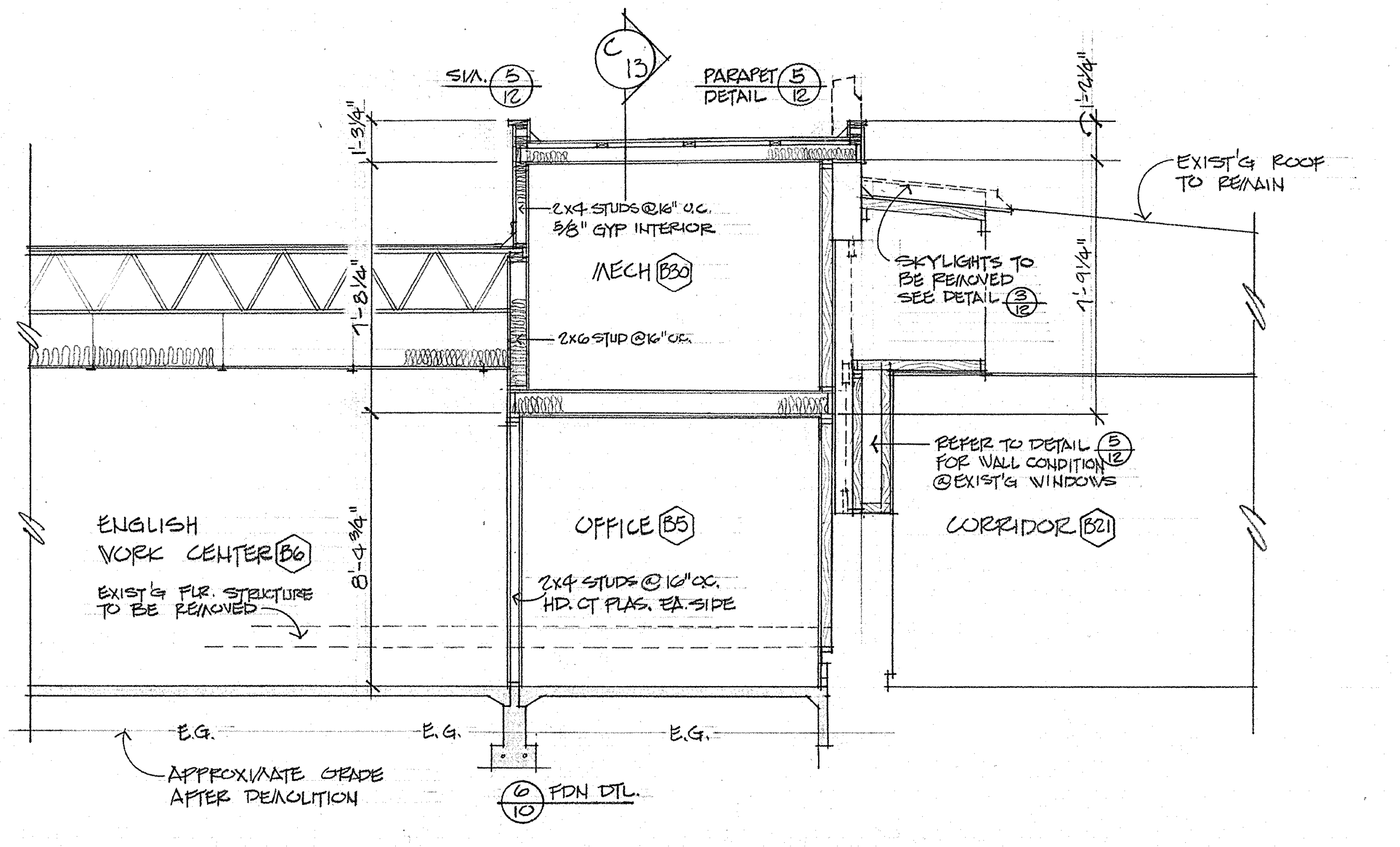
SIM. 5/12
C/13
PARAPET DETAIL 5/12
1'-3¾"
1'-2¼"
2×4 STUDS @16" O.C. ⅝" GYP INTERIOR
MECH B30
2×6 STUD @16" O.C.
7'-8¼"
1'-9¼"
EXIST'G ROOF TO REMAIN
SKYLIGHTS TO BE REMOVED SEE DETAIL 3/12
REFER TO DETAIL 5/12 FOR WALL CONDITION @EXIST'G WINDOWS
ENGLISH WORK CENTER B6
EXIST'G FLR. STRUCTURE TO BE REMOVED
8'-4¾"
OFFICE B5
2×4 STUDS @ 16" O.C. HD. CT PLAS. EA. SIDE
CORRIDOR B21
E.G.
APPROXIMATE GRADE AFTER DEMOLITION
6/10 FDN DTL.

E/13 SECTION LOOKING EAST THRU MECH. RM. 1/4"=1'-0"

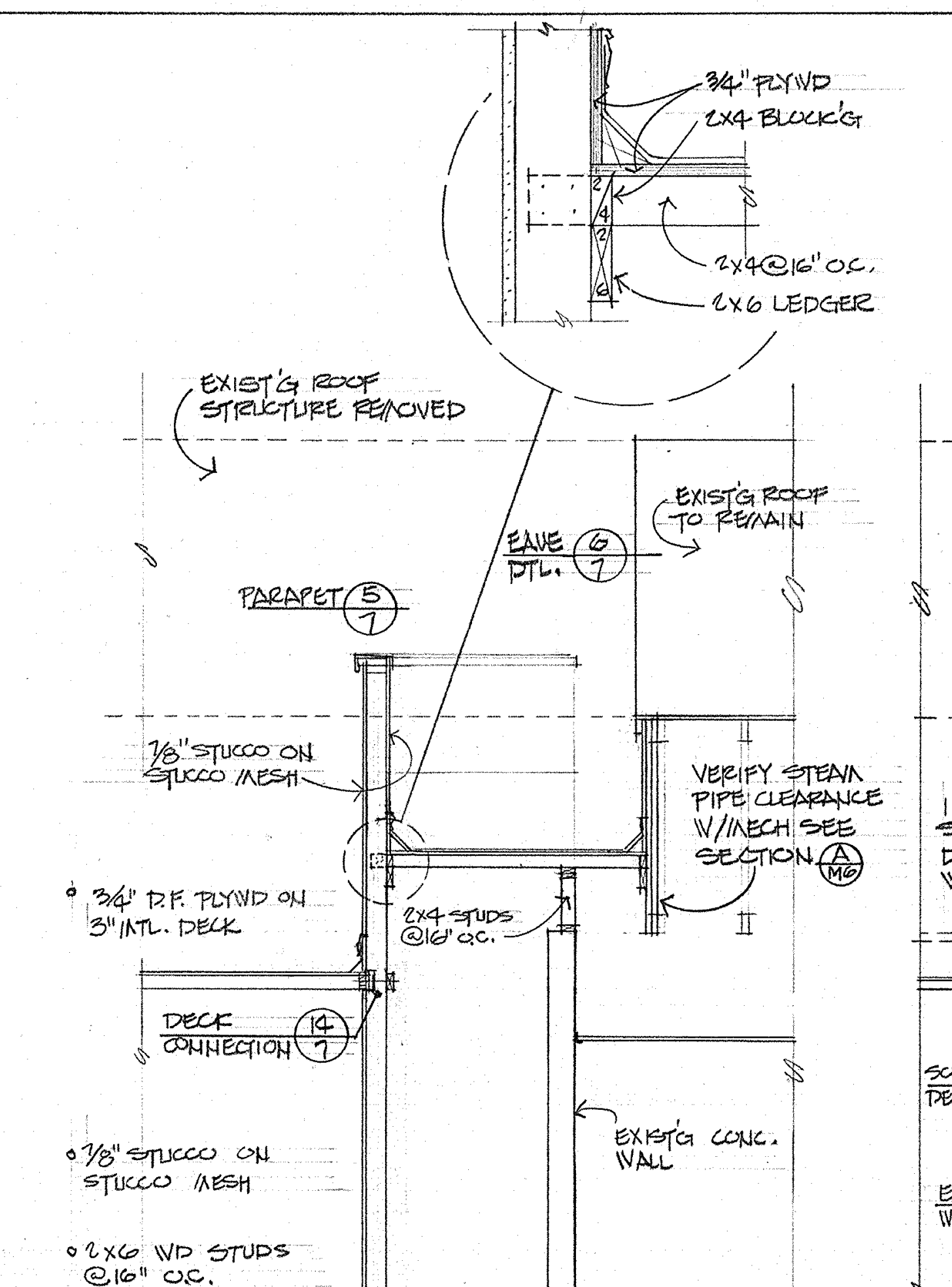
¾" PLYWD
2×4 BLOCK'G
2×4 @16" O.C.
2×6 LEDGER
EXIST'G ROOF STRUCTURE REMOVED
EAVE DTL. 6/7
EXIST'G ROOF TO REMAIN
PARAPET 5/7
⅞" STUCCO ON STUCCO MESH
VERIFY STEAM PIPE CLEARANCE W/MECH SEE SECTION A/M6
• ¾" D.F. PLYWD ON 3" MTL. DECK
2×4 STUDS @16" O.C.
DECK CONNECTION 14/7
EXIST'G CONC. WALL
• ⅞" STUCCO ON STUCCO MESH
• 2×6 WD STUDS @16" O.C.
MECH B28
CORRIDOR B19

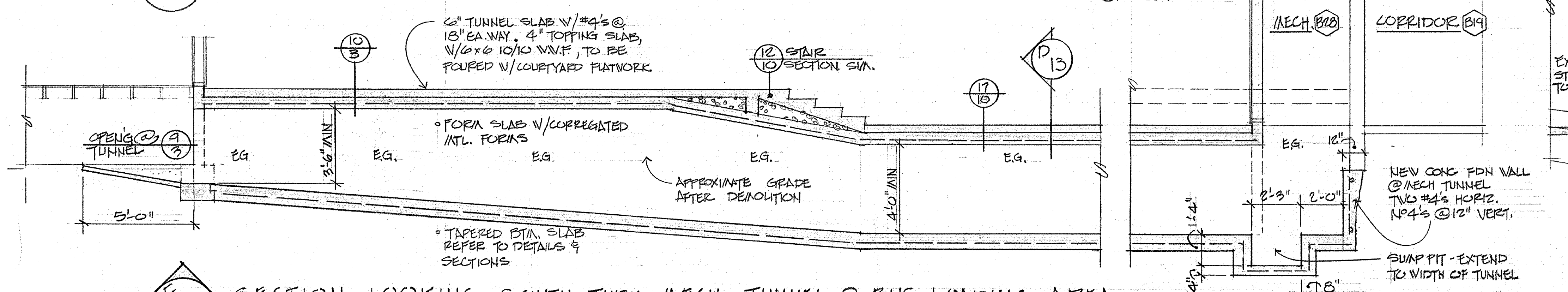
6" TUNNEL SLAB W/#4's @ 18" EA. WAY. 4" TOPPING SLAB, W/6×6 10/10 W.W.F., TO BE POURED W/COURTYARD FLATWORK.
10/3
12/10 STAIR SECTION SIM.
D/13
17/10
OPEN'G @ TUNNEL 9/3
E.G.
3'-6" MIN
• FORM SLAB W/CORREGATED MTL. FORMS
APPROXIMATE GRADE AFTER DEMOLITION
4'-0" MIN
5'-0"
• TAPERED BTM. SLAB REFER TO DETAILS & SECTIONS
12"
2'-3"
2'-0"
1'-4"
4"
8"
NEW CONC FDN WALL @MECH TUNNEL TWO #4's HORIZ. No4's @12" VERT.
SUMP PIT - EXTEND TO WIDTH OF TUNNEL

F/13 SECTION LOOKING SOUTH THRU MECH. TUNNEL @ BUS LOADING AREA 1/4"=1'-0"

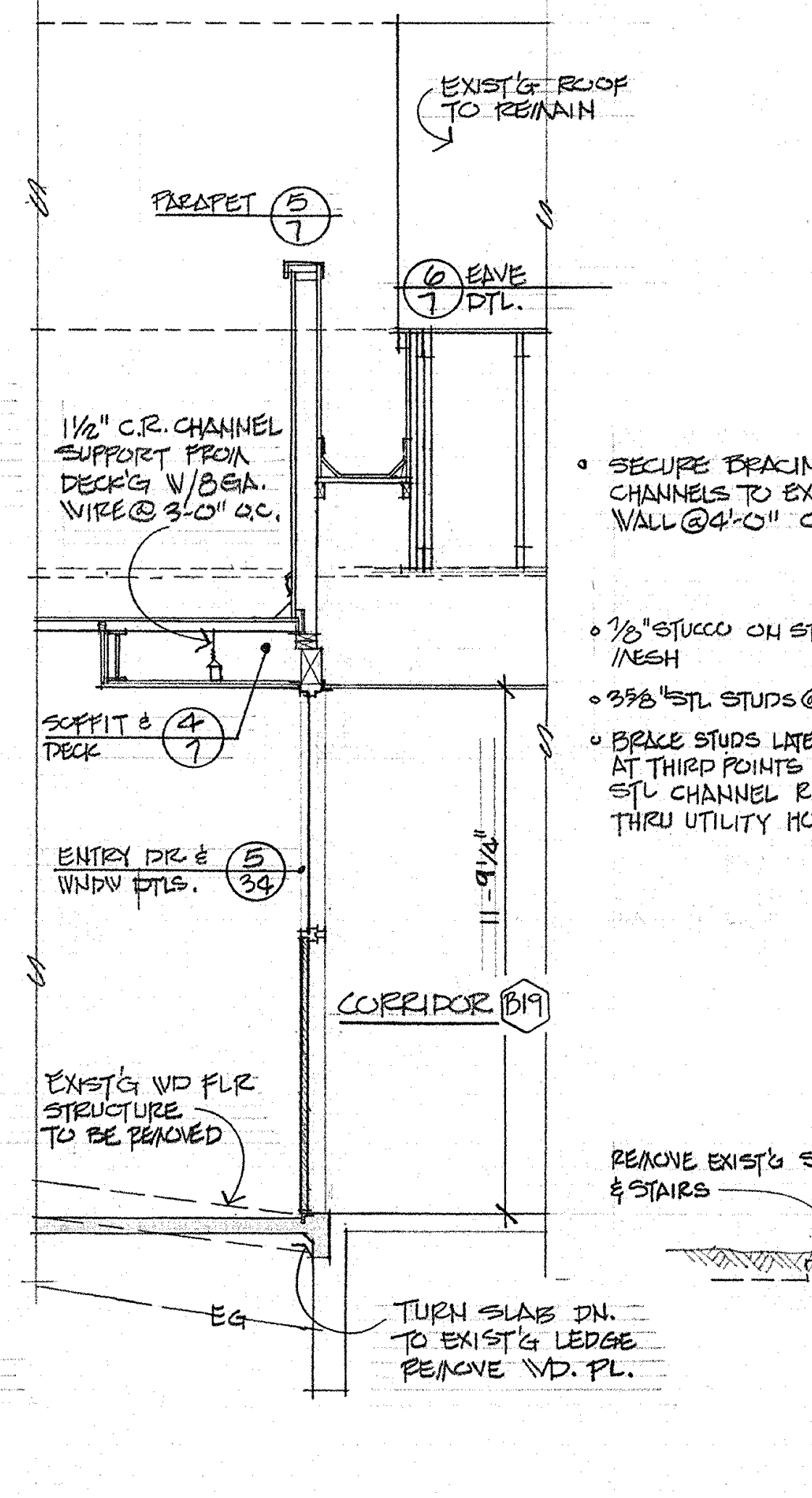
EXIST'G ROOF TO REMAIN
PARAPET 5/7
6/7 EAVE DTL.
1½" C.R. CHANNEL SUPPORT FROM DECK'G W/8GA. WIRE @ 3'-0" O.C.
SOFFIT & DECK 4/7
ENTRY DR & WNDW DTLS. 5/34
11'-9¼"
CORRIDOR B19
EXIST'G WD FLR STRUCTURE TO BE REMOVED
EG
TURN SLAB DN. TO EXIST'G LEDGE REMOVE WD. PL.

G/13 SECTION @ WEST MAIN ENTRY 1/4"=1'-0"

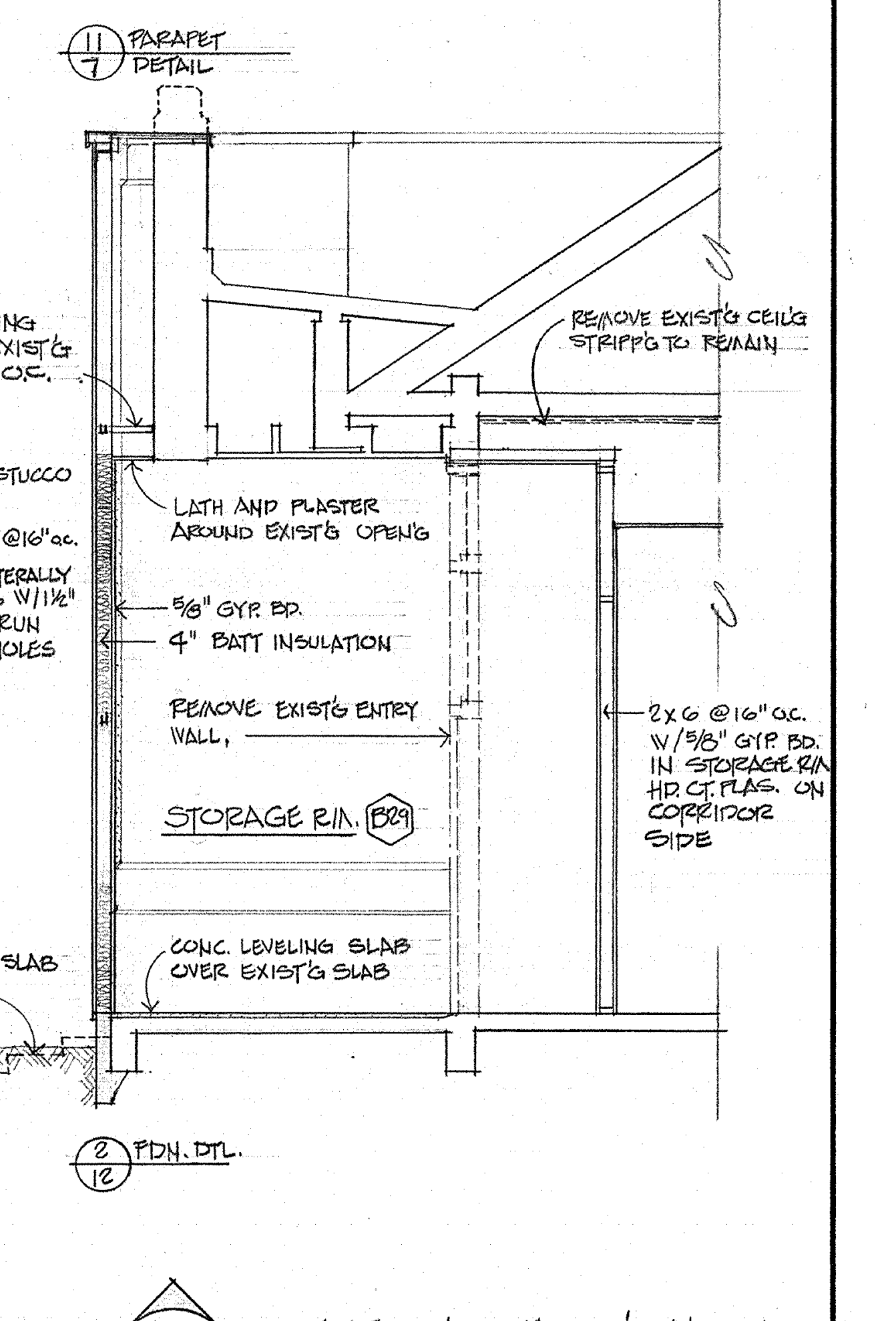
11/7 PARAPET DETAIL
• SECURE BRACING CHANNELS TO EXIST'G WALL @4'-0" O.C.
REMOVE EXIST'G CEIL'G STRIPP'G TO REMAIN
• ⅞" STUCCO ON STUCCO MESH
• 3⅝" STL STUDS @16" O.C.
• BRACE STUDS LATERALLY AT THIRD POINTS W/1½" STL CHANNEL RUN THRU UTILITY HOLES
LATH AND PLASTER AROUND EXIST'G OPEN'G
⅝" GYP. BD.
4" BATT INSULATION
REMOVE EXIST'G ENTRY WALL,
2×6 @16" O.C. W/⅝" GYP. BD. IN STORAGE RM HD. CT. PLAS. ON CORRIDOR SIDE
STORAGE RM. B29
REMOVE EXIST'G SLAB & STAIRS
CONC. LEVELING SLAB OVER EXIST'G SLAB
2/12 FDN. DTL.

H/13 SECTION @ EXIST'G NORTH ENTRY CLOSURE 1/4"=1'-0"

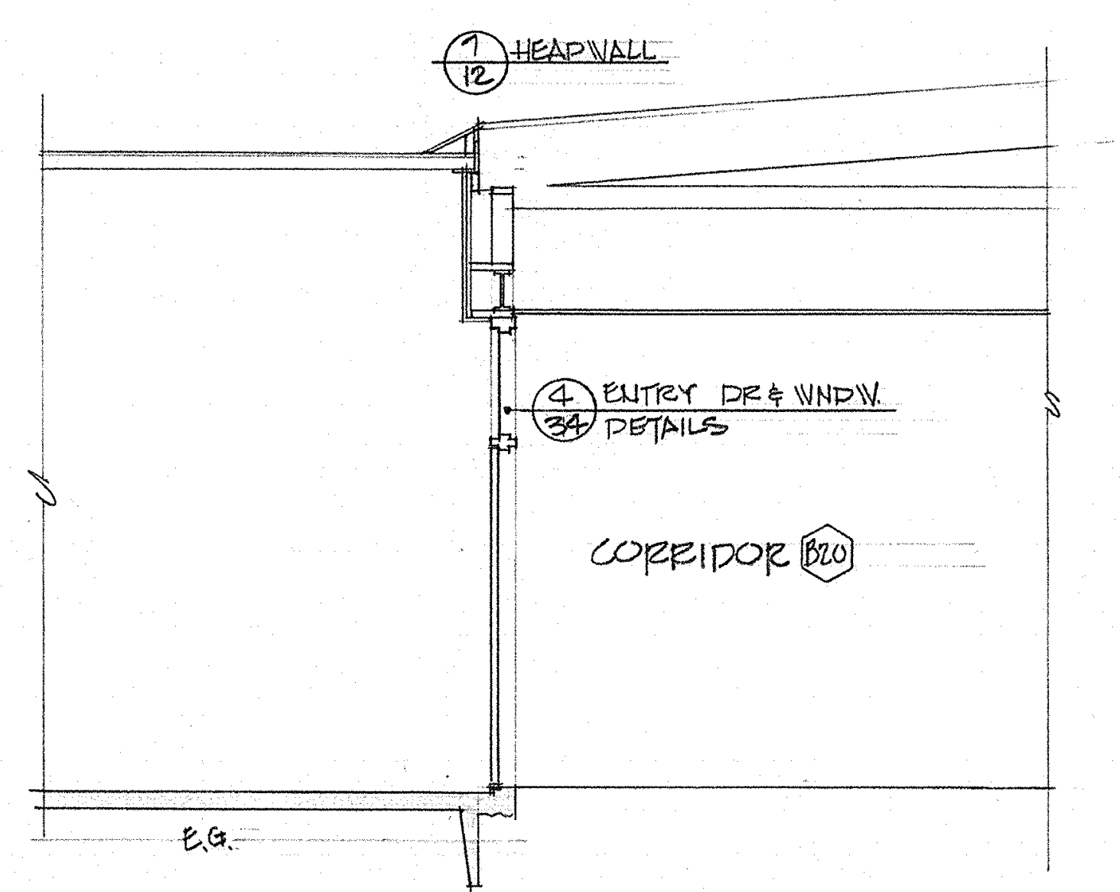
7/12 HEADWALL
4/34 ENTRY DR & WNDW. DETAILS
CORRIDOR B20
E.G.

J/13 SECTION THRU ENTRY @ SOUTHWEST CORNER OF COURTYARD

SECTIONS - SECTOR B
SWEET HOME HIGH SCHOOL
ADDITIONS AND ALTERATIONS 1974
DISTRICT 55 LINN COUNTY, OREGON

ARCHITECTS
HAMLIN, MARTIN, SCHULTZ & GEYER
AIA
159 W. 12TH EUGENE, OREGON 97401

A
13
JOB NO.

REGISTERED ARCHITECT
CLARE K. HAMLIN
Clare K Hamlin
EUGENE, OREGON
STATE OF OREGON

STORAGE
CORRIDOR
MAIN OFFICE
V. PRINC.
WAITING
DIR. DIV. OCCUP.
FILES
WOMEN
SEC.
HALL
PRINC.
MEN
COUN.
CONF.
COUNSELLING CENTER
OFFICE
STUDENT STORE
PHOTO
STUDENT COUNCIL
HEALTH CLASS RM.
BOYS TOILET
GYMNASIUM
MECH.
WEIGHT RM.
TEAM RM.
GIRLS LOCKER RM.
CAFETERIA
DRYING
GIRLS SHOWER
TRAIN'G RM.
BOYS LOCKER RM.
SWIMMING POOL
POOL STO.
P.E. GYMNASIUM
ENTRY
TOILETS
BOYS SHOWER
TOWEL RM.
TEAM SHOWER
STO.
COACHES
EQUIP. RM.
CLASS RM.
GYM BALCONY
ATTIC ACCESS
LOCKERS N.I.C.
N

FLOOR PLAN
SECTOR C 1/8" = 1'-0"

1/14 ISLAND LOCKER BASE DTL 1" = 1'-0"

NOTE:
ALL LOCKERS IN PHYS. ED. FACILITY TO RECEIVE LOCKER BASES AS DETAILED. LOCKERS ARE N.I.C.

2/14 WALL LOCKER BASE DTL 1" = 1'-0"

3/14 TUNNEL DTLS @ SWIMMING POOL LOCKER AREA 1/2" = 1'-0"

A SECTION LOOKING NORTH

B SECTION LOOKING EAST/WEST

4/14 EPOXY FLR EDGE FULL SIZE

5/14 RELOCATED BLEACHER SUPPORT

6/14 TYP PERIMETER FTG. 1/2" = 1'-0"

7/14 THICKENED SLAB DTL 1/2" = 1'-0"

LEGEND

EXST'G WALL TO REMAIN
NEW WOOD STUD WALL
NEW METAL STUD WALL
NEW NON-BEARING MASONRY WALL
NEW BEARING MASONRY WALL
NEW CONCRETE WALL

FLOOR PLAN, DETAILS - SECTOR C

SWEET HOME HIGH SCHOOL
ADDITIONS AND ALTERATIONS 1974
DISTRICT 55 LINN COUNTY, OREGON

ARCHITECTS
HAMLIN, MARTIN,
SCHULTZ & GEYER
AIA
159 W. 12TH EUGENE, OREGON 97401

A
14
JOB NO.

REGISTERED ARCHITECT
CLARE K. HAMLIN
Clare K Hamlin
EUGENE, OREGON
STATE OF OREGON

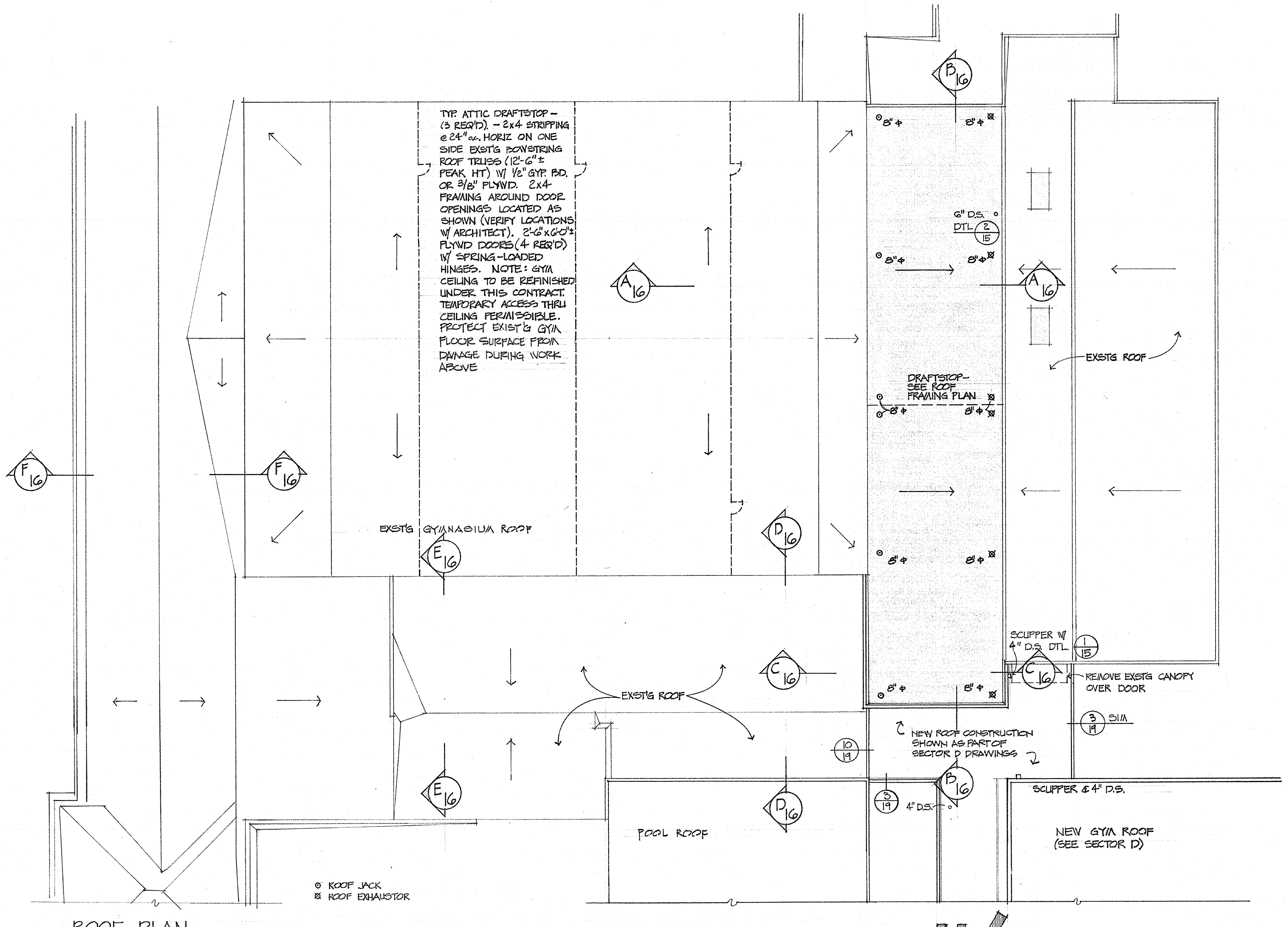
TYP. ATTIC DRAFTSTOP – (3 REQ'D). – 2x4 STRIPPING @ 24" o.c. HORIZ ON ONE SIDE EXST'G BOWSTRING ROOF TRUSS (12'-6" ± PEAK HT) W/ 1/2" GYP. BD. OR 3/8" PLYWD. 2x4 FRAMING AROUND DOOR OPENINGS LOCATED AS SHOWN (VERIFY LOCATIONS W/ ARCHITECT). 2'-6"x6'-0"± PLYWD DOORS (4 REQ'D) W/ SPRING-LOADED HINGES. NOTE: GYM CEILING TO BE REFINISHED UNDER THIS CONTRACT. TEMPORARY ACCESS THRU CEILING PERMISSIBLE. PROTECT EXIST'G GYM FLOOR SURFACE FROM DAMAGE DURING WORK ABOVE
EXST'G GYMNASIUM ROOF
6" D.S. DTL 2/15
8" ⌀
DRAFTSTOP– SEE ROOF FRAMING PLAN
EXST'G ROOF
EXST'G ROOF
SCUPPER W/ 4" D.S. DTL. 1/15
REMOVE EXST'G CANOPY OVER DOOR
3/19 SIM.
10/19
NEW ROOF CONSTRUCTION SHOWN AS PART OF SECTOR D DRAWINGS
3/19
4" D.S.
SCUPPER & 4" D.S.
POOL ROOF
NEW GYM ROOF (SEE SECTOR D)
A 16
B 16
C 16
D 16
E 16
F 16
⊙ ROOF JACK
⊠ ROOF EXHAUSTOR
N

ROOF PLAN
SECTOR C
1/16" = 1'-0"

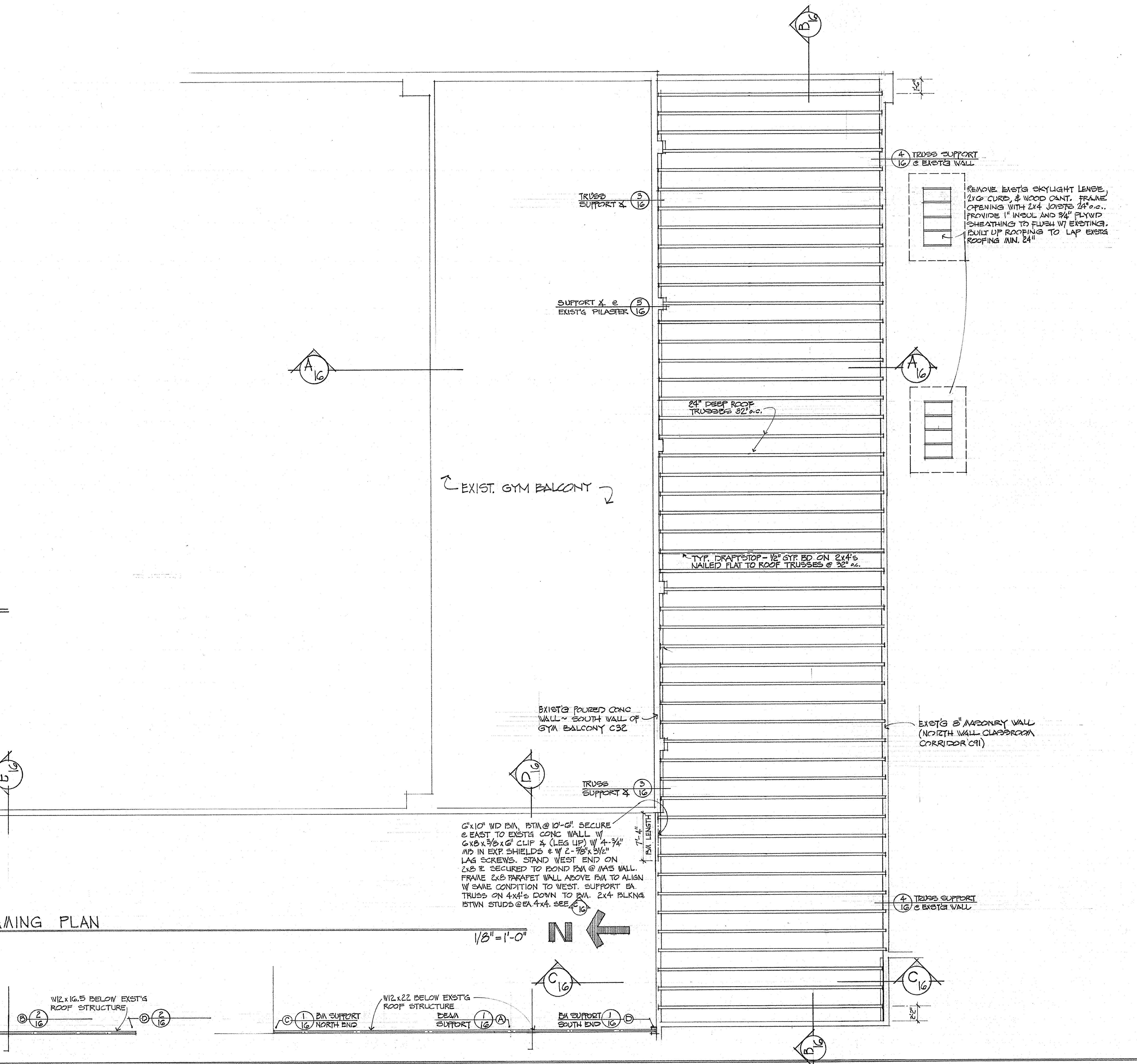
1'-6"
4/16 TRUSS SUPPORT @ EXST'G WALL
REMOVE EXST'G SKYLIGHT LENSE, 2x6 CURB, & WOOD CANT. FRAME OPENING WITH 2x4 JOISTS 24" o.c.. PROVIDE 1" INSUL AND 3/4" PLYWD SHEATHING TO FLUSH W/ EXISTING. BUILT UP ROOFING TO LAP EXST'G ROOFING MIN. 24"
TRUSS SUPPORT ℄ 3/16
SUPPORT ℄ @ EXIST'G PILASTER 5/16
24" DEEP ROOF TRUSSES 32" o.c.
EXIST. GYM BALCONY
TYP. DRAFTSTOP – 1/2" GYP. BD. ON 2x4's NAILED FLAT TO ROOF TRUSSES @ 32" o.c.
EXIST'G POURED CONC WALL ~ SOUTH WALL OF GYM BALCONY C32
EXST'G 8" MASONRY WALL (NORTH WALL CLASSROOM CORRIDOR C91)
TRUSS SUPPORT ℄ 3/16
7'-4" B/M LENGTH
6"x10" WD B/M, BTM @ 10'-6". SECURE @ EAST TO EXST'G CONC WALL W/ 6x8x3/8x6" CLIP ℄ (LEG UP) W/ 4-3/4" MB IN EXP. SHIELDS & W/ 2-5/8"x3 1/2" LAG SCREWS. STAND WEST END ON 2x8 ℄ SECURED TO BOND B/M @ MAS WALL. FRAME 2x8 PARAPET WALL ABOVE B/M TO ALIGN W/ SAME CONDITION TO WEST. SUPPORT EA. TRUSS ON 4x4's DOWN TO B/M. 2x4 BLKNG BTWN STUDS @ EA. 4x4. SEE C/16
4/16 TRUSS SUPPORT @ EXST'G WALL
W12x16.5 BELOW EXST'G ROOF STRUCTURE
A 2/16
B 2/16
D 2/16
W12x22 BELOW EXST'G ROOF STRUCTURE
C 1/16 B/M SUPPORT NORTH END
BEAM SUPPORT 1/16 A
B/M SUPPORT SOUTH END 1/16 D
2'-2"
A 16
B 16
C 16
D 16
E 16
N

ROOF FRAMING PLAN
SECTOR C
1/8" = 1'-0"

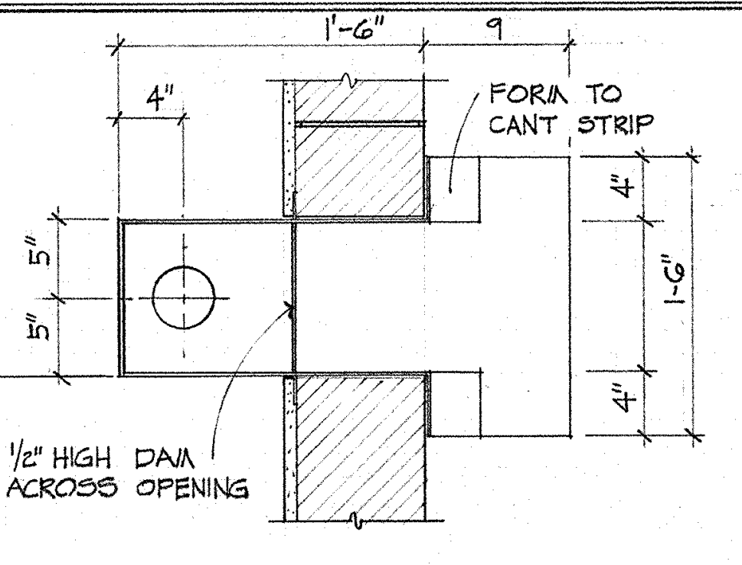
1'-6"
9
4"
FORM TO CANT STRIP
5"
5"
4"
1'-6"
4"
1'-4" TO WEST FACE EXST'G WALL
1/2" HIGH DAM ACROSS OPENING

A PLAN SECTION

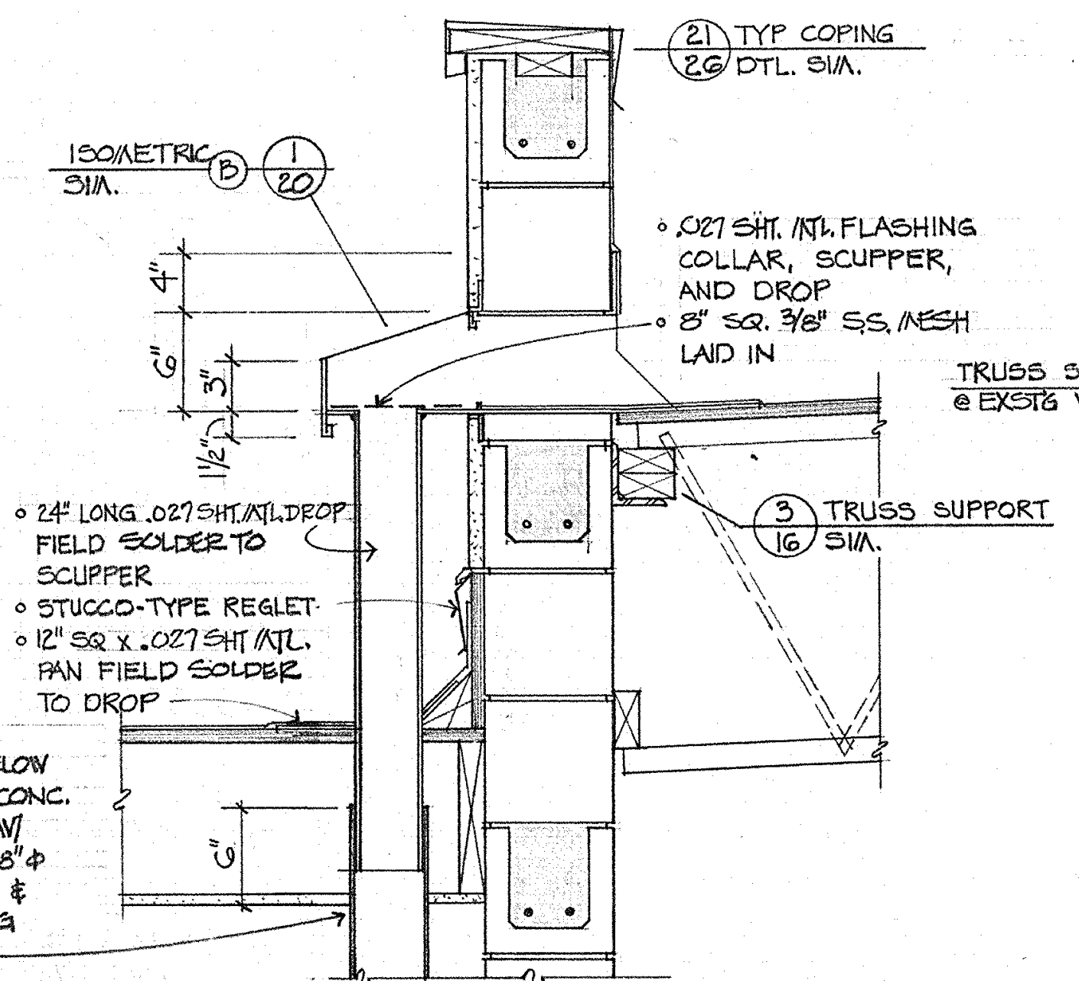
21/26 TYP COPING DTL. SIM.
ISOMETRIC SIM. B 1/20
• .027 SHT. MTL. FLASHING COLLAR, SCUPPER, AND DROP
• 8" SQ. 3/8" S.S. MESH LAID IN
TRUSS SUPPORT @ EXST'G WALL 4/16
3/16 TRUSS SUPPORT SIM.
• 24" LONG .027 SHT. MTL. DROP FIELD SOLDER TO SCUPPER
• STUCCO-TYPE REGLET
• 12" SQ x .027 SHT. MTL. PAN FIELD SOLDER TO DROP
4"
6"
3"
1 1/2"
6"
4" ⌀ SCHED. 40 PVC. D.S. SECURE TO MAS. WALL 12" BELOW ARCADE CEILING, 12" ABOVE CONC. SLAB & AT MIDPT. SECURE W/ 1/8"x4 1/2"x3" FB AS ℄ W/ 3/8" ⌀ HOLE FOR 5/16" ⌀ CAP SCREW & 5/16" ⌀ HOLE FOR 1/4"x1 1/2" LAG BOLT IN LEAD SHIELD.

1/15 SCUPPER & D.S. @ STORAGE ROOM C64 1" = 1'-0"

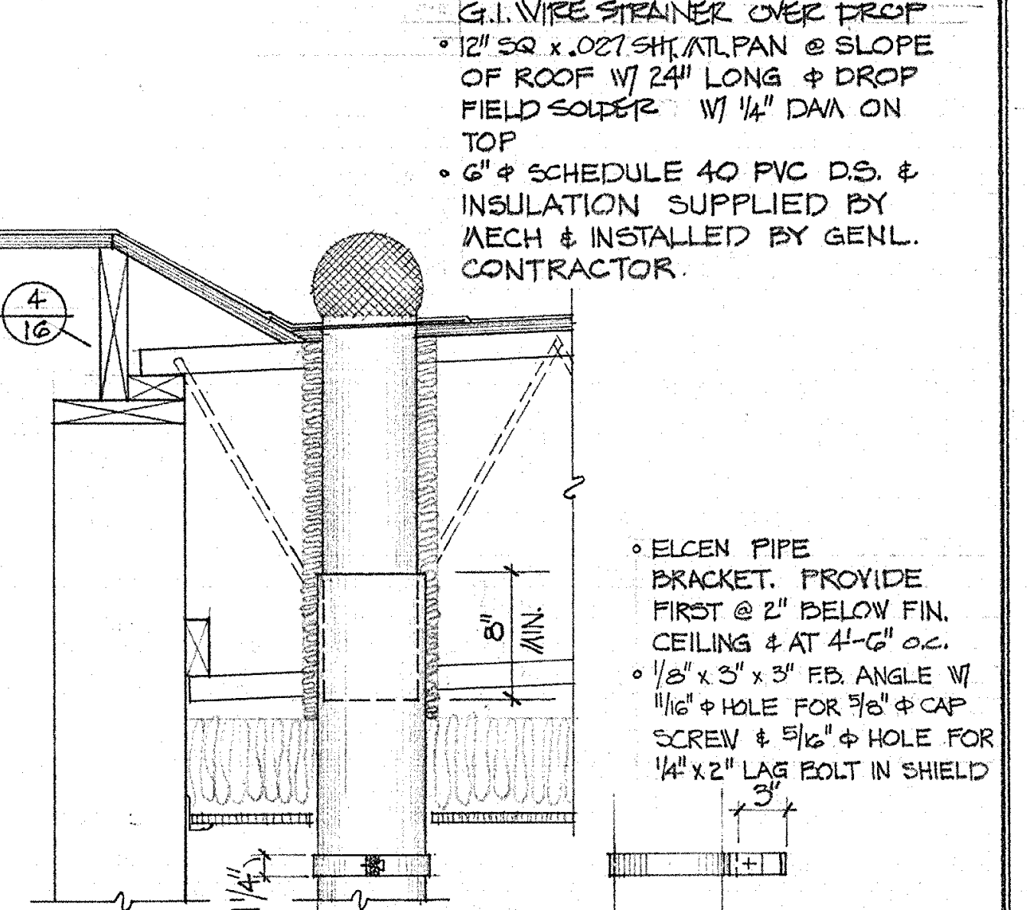
G.I. WIRE STRAINER OVER DROP
• 12" SQ x .027 SHT. MTL. PAN @ SLOPE OF ROOF W/ 24" LONG ⌀ DROP FIELD SOLDER W/ 1/4" DAM ON TOP
• 6" ⌀ SCHEDULE 40 PVC D.S. & INSULATION SUPPLIED BY MECH & INSTALLED BY GENL. CONTRACTOR.
• ELCEN PIPE BRACKET. PROVIDE FIRST @ 2" BELOW FIN. CEILING & AT 4'-6" o.c.
• 1/8"x3"x3" F.B. ANGLE W/ 11/16" ⌀ HOLE FOR 5/8" ⌀ CAP SCREW & 5/16" ⌀ HOLE FOR 1/4"x2" LAG BOLT IN SHIELD
3"
8" MIN.
1 1/4"

2/15 D.S. THRU' TRUSSES @ STOR. RM. C83 1" = 1'-0"

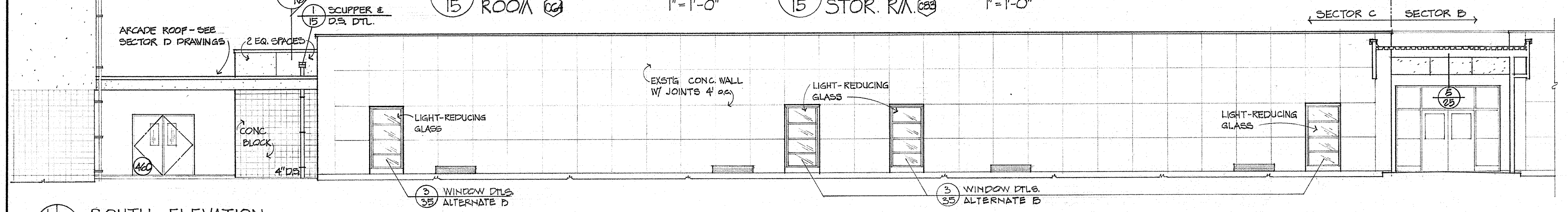
SECTOR D
SECTOR C
SECTOR C
SECTOR B
C 16
1/15 SCUPPER & D.S. DTL.
ARCADE ROOF – SEE SECTOR D DRAWINGS
2 EQ. SPACES
CONC BLOCK
4" D.S.
460
EXST'G CONC. WALL W/ JOINTS 4' o.c.
LIGHT-REDUCING GLASS
LIGHT-REDUCING GLASS
LIGHT-REDUCING GLASS
5/25
3/35 WINDOW DTLS. ALTERNATE B
3/35 WINDOW DTLS. ALTERNATE B

1/15 SOUTH ELEVATION
SECTOR C
1/8" = 1'-0"

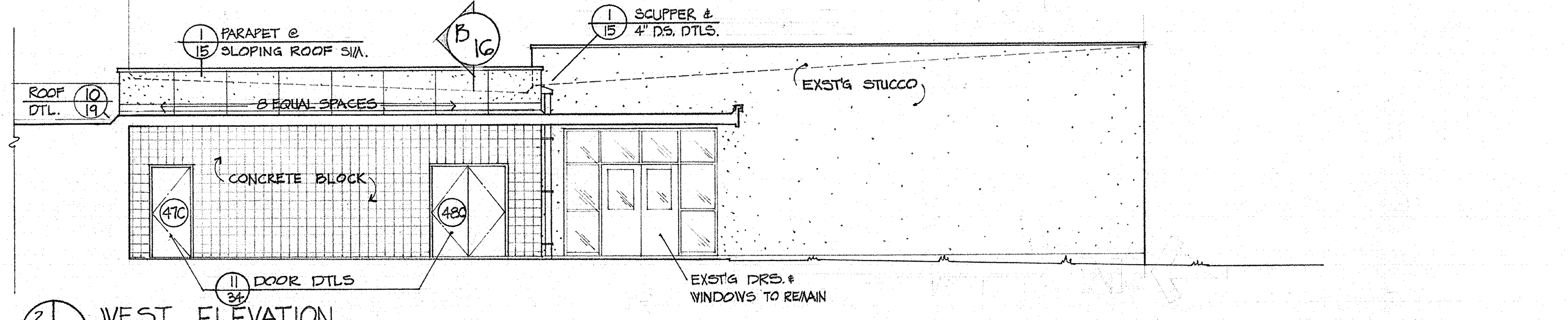
1/15 PARAPET @ SLOPING ROOF SIM.
B 16
1/15 SCUPPER & 4" D.S. DTLS.
ROOF DTL. 10/19
8 EQUAL SPACES
EXST'G STUCCO
CONCRETE BLOCK
47C
48C
11/34 DOOR DTLS
EXST'G DRS. & WINDOWS TO REMAIN

2/15 WEST ELEVATION
SECTOR C
1/8" = 1'-0"

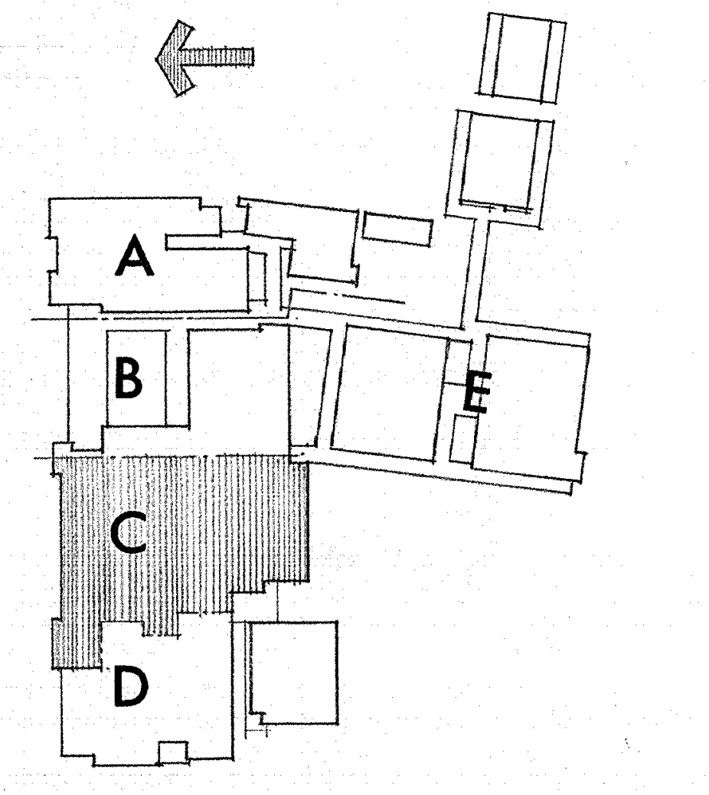

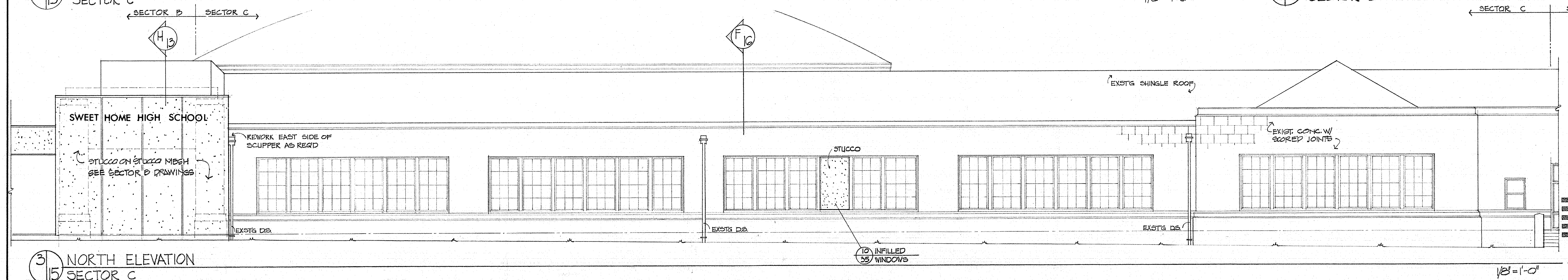
SECTOR B
SECTOR C
SECTOR C
SECTOR D
H 13
F 16
SWEET HOME HIGH SCHOOL
STUCCO ON STUCCO MESH SEE SECTOR B DRAWINGS
REWORK EAST SIDE OF SCUPPER AS REQ'D
EXST'G SHINGLE ROOF
STUCCO
EXIST. CONC. W/ SCORED JOINTS
EXST'G D.S.
EXST'G D.S.
EXST'G D.S.
10/35 INFILLED WINDOWS

3/15 NORTH ELEVATION
SECTOR C
1/8" = 1'-0"

ROOF PLAN, ROOF FRAMING PLAN, ELEVATIONS – SECTOR C

SWEET HOME HIGH SCHOOL
ADDITIONS AND ALTERATIONS 1974
DISTRICT 55 LINN COUNTY, OREGON

ARCHITECTS
HAMLIN, MARTIN,
SCHULTZ & GEYER
AIA
159 W. 12TH EUGENE, OREGON 97401

A
15
JOB NO.

CLARE K. HAMLIN
Clare K Hamlin

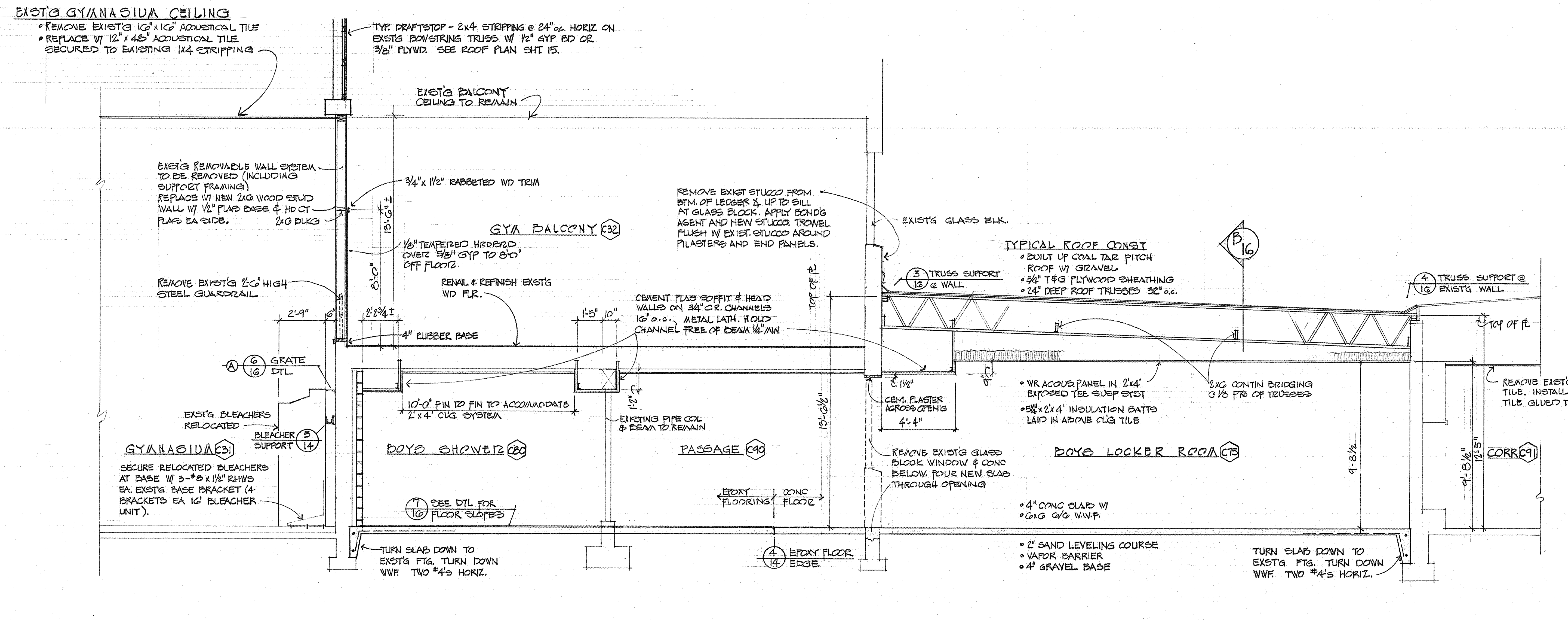
EXST'G GYMNASIUM CEILING
• REMOVE EXIST'G 16"x16" ACOUSTICAL TILE
• REPLACE W/ 12"x48" ACOUSTICAL TILE SECURED TO EXISTING 1x4 STRIPPING
TYP. DRAFTSTOP - 2x4 STRIPPING @ 24" o.c. HORIZ ON EXST'G BOWSTRING TRUSS W/ 1/2" GYP BD OR 3/8" PLYWD. SEE ROOF PLAN SHT 15.
EXST'G BALCONY CEILING TO REMAIN
EXST'G REMOVABLE WALL SYSTEM TO BE REMOVED (INCLUDING SUPPORT FRAMING) REPLACE W/ NEW 2x6 WOOD STUD WALL W/ 1/2" PLAS BASE & HD CT PLAS EA SIDE.
2x6 BLKG
3/4" x 1 1/2" RABBETED WD TRIM
13'-6" ±
1/8" TEMPERED HRDBRD OVER 5/8" GYP TO 8'-0" OFF FLOOR
8'-0"
GYM BALCONY C32
REMOVE EXIST'G 2'-6" HIGH STEEL GUARDRAIL
RENAIL & REFINISH EXST'G WD FLR.
2'-9"
6"
2'-2 3/4" ±
4" RUBBER BASE
1'-5"
10"
A 6/16 GRATE DTL
EXST'G BLEACHERS RELOCATED
BLEACHER SUPPORT 5/14
GYMNASIUM C31
SECURE RELOCATED BLEACHERS AT BASE W/ 3-#8 x 1 1/2" RHWS EA. EXST'G BASE BRACKET (4 BRACKETS EA 16' BLEACHER UNIT).
10'-0" FIN TO FIN TO ACCOMMODATE 2'x4' CLG SYSTEM
BOYS SHOWER C80
7/16 SEE DTL FOR FLOOR SLOPES
TURN SLAB DOWN TO EXST'G FTG. TURN DOWN WWF. TWO #4's HORIZ.
CEMENT PLAS SOFFIT & HEAD WALLS ON 3/4" C.R. CHANNELS 16" o.c., METAL LATH. HOLD CHANNEL FREE OF BEAM 1/4" MIN
1'-2"
EXISTING PIPE COL & BEAM TO REMAIN
PASSAGE C90
EPOXY FLOORING
CONC FLOOR
13'-6 1/2"
4/14 EPOXY FLOOR EDGE
TOP OF PL
REMOVE EXIST STUCCO FROM BTM. OF LEDGER & UP TO SILL AT GLASS BLOCK. APPLY BOND'G AGENT AND NEW STUCCO. TROWEL FLUSH W/ EXIST. STUCCO AROUND PILASTERS AND END PANELS.
EXIST'G GLASS BLK.
3/16 TRUSS SUPPORT @ WALL
1 1/2"
CEM. PLASTER ACROSS OPEN'G
4'-4"
REMOVE EXIST'G GLASS BLOCK WINDOW & CONC BELOW. POUR NEW SLAB THROUGH OPENING
TYPICAL ROOF CONST
• BUILT UP COAL TAR PITCH ROOF W/ GRAVEL
• 3/4" T&G PLYWOOD SHEATHING
• 24" DEEP ROOF TRUSSES 32" o.c.
B 16
• WR ACOUS. PANEL IN 2'x4' EXPOSED TEE SUSP SYST
• 5 1/4" x 2' x 4' INSULATION BATTS LAID IN ABOVE CLG TILE
2x6 CONTIN BRIDGING @ 1/3 PTS OF TRUSSES
BOYS LOCKER ROOM C75
• 4" CONC SLAB W/
• 6x6 6/6 W.W.F.
• 2" SAND LEVELING COURSE
• VAPOR BARRIER
• 4" GRAVEL BASE
TURN SLAB DOWN TO EXST'G FTG. TURN DOWN WWF. TWO #4's HORIZ.
9'-8 1/2"
4/16 TRUSS SUPPORT @ EXIST'G WALL
TOP OF PL
REMOVE EXST'G ACOUSTICAL TILE. INSTALL NEW ACOUSTICAL TILE GLUED TO EXST'G GYP BD.
9'-8 1/2"
12'-5"
CORR C91

A 16 SECTION LOOKING EAST 1/4" = 1'-0"

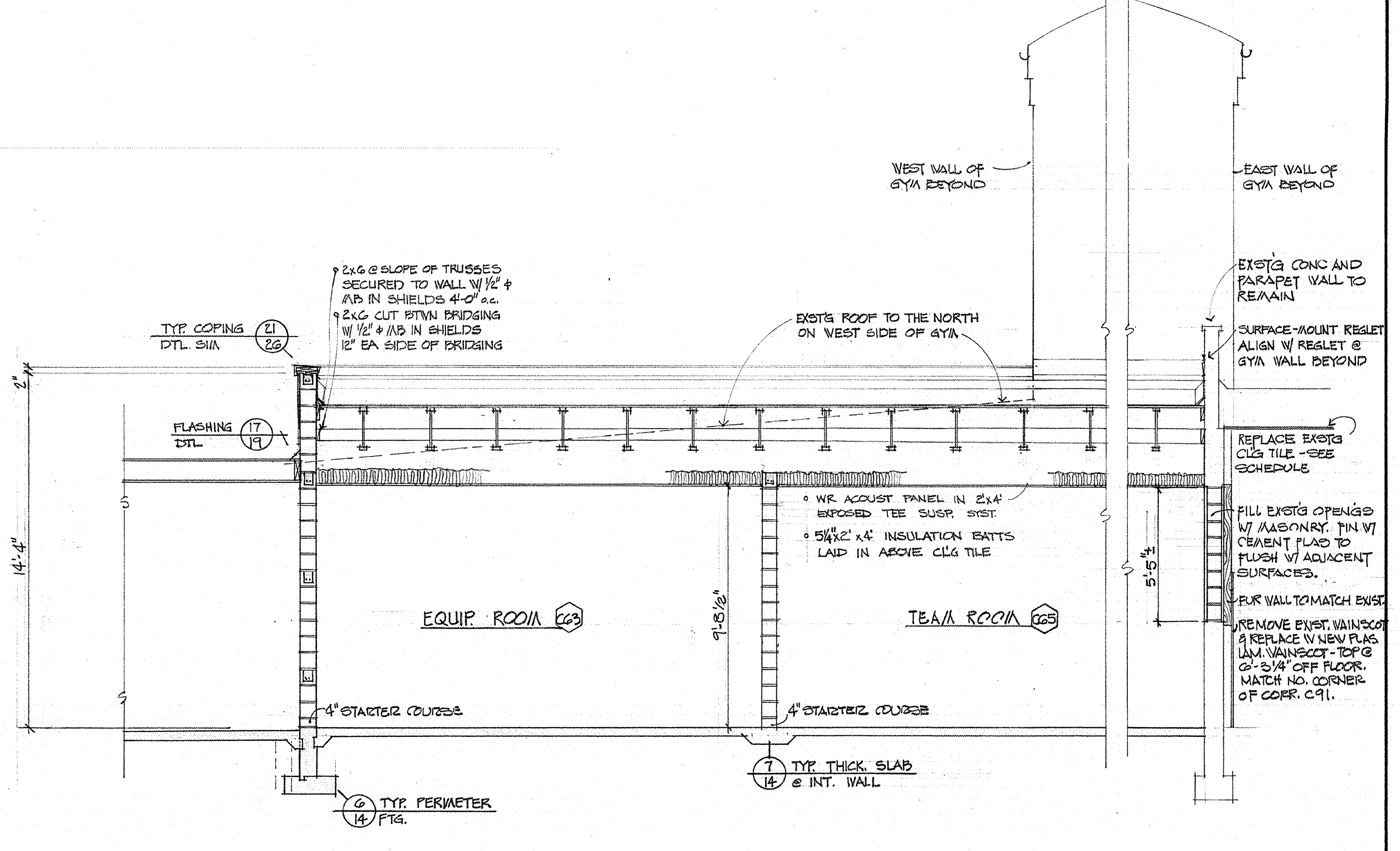
WEST WALL OF GYM BEYOND
EAST WALL OF GYM BEYOND
• 2x6 @ SLOPE OF TRUSSES SECURED TO WALL W/ 1/2" ⌀ MB IN SHIELDS 4'-0" o.c.
• 2x6 CUT BTWN BRIDGING W/ 1/2" ⌀ MB IN SHIELDS 12" EA SIDE OF BRIDGING
TYP. COPING DTL. SIM 21/26
EXST'G ROOF TO THE NORTH ON WEST SIDE OF GYM
EXST'G CONC AND PARAPET WALL TO REMAIN
SURFACE-MOUNT REGLET ALIGN W/ REGLET @ GYM WALL BEYOND
2"
FLASHING DTL. 17/19
REPLACE EXST'G CLG TILE - SEE SCHEDULE
14'-4"
• WR ACOUST PANEL IN 2'x4' EXPOSED TEE SUSP. SYST.
• 5 1/4" x 2' x 4' INSULATION BATTS LAID IN ABOVE CLG TILE
FILL EXST'G OPENG'S W/ MASONRY. FIN W/ CEMENT PLAS TO FLUSH W/ ADJACENT SURFACES.
5'-5" ±
FUR WALL TO MATCH EXIST.
REMOVE EXIST. WAINSCOT & REPLACE W/ NEW PLAS LAM. WAINSCOT - TOP @ 6'-3 1/4" OFF FLOOR. MATCH NO. CORNER OF CORR. C91.
EQUIP. ROOM C63
9'-8 1/2"
TEAM ROOM C65
4" STARTER COURSE
4" STARTER COURSE
6/14 TYP. PERIMETER FTG.
7/14 TYP. THICK. SLAB @ INT. WALL

B 16 SECTION LOOKING NORTH 1/4" = 1'-0"

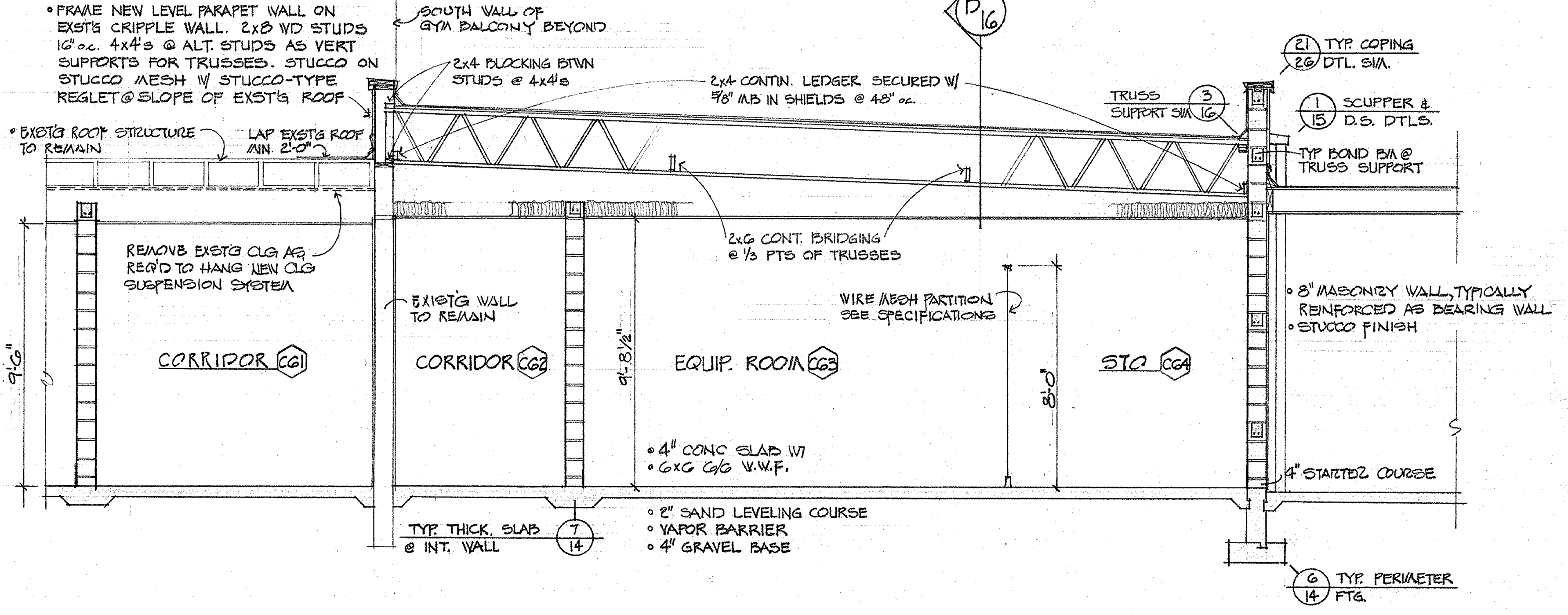
• FRAME NEW LEVEL PARAPET WALL ON EXST'G CRIPPLE WALL. 2x8 WD STUDS 16" o.c. 4x4's @ ALT. STUDS AS VERT SUPPORTS FOR TRUSSES. STUCCO ON STUCCO MESH W/ STUCCO-TYPE REGLET @ SLOPE OF EXST'G ROOF
SOUTH WALL OF GYM BALCONY BEYOND
2x4 BLOCKING BTWN STUDS @ 4x4's
2x4 CONTIN. LEDGER SECURED W/ 5/8" MB IN SHIELDS @ 48" o.c.
B 16
21/26 TYP. COPING DTL. SIM.
TRUSS SUPPORT SIM 3/16
1/15 SCUPPER & D.S. DTLS.
TYP BOND BM @ TRUSS SUPPORT
• EXST'G ROOF STRUCTURE TO REMAIN
LAP EXST'G ROOF MIN. 2'-0"
REMOVE EXST'G CLG AS REQ'D TO HANG NEW CLG SUSPENSION SYSTEM
2x6 CONT. BRIDGING @ 1/3 PTS OF TRUSSES
EXIST'G WALL TO REMAIN
WIRE MESH PARTITION SEE SPECIFICATIONS
• 8" MASONRY WALL, TYPICALLY REINFORCED AS BEARING WALL.
• STUCCO FINISH
9'-6"
CORRIDOR C61
CORRIDOR C62
9'-8 1/2"
EQUIP. ROOM C63
8'-0"
STO C64
• 4" CONC SLAB W/
• 6x6 6/6 W.W.F.
4" STARTER COURSE
TYP. THICK. SLAB @ INT. WALL 7/14
• 2" SAND LEVELING COURSE
• VAPOR BARRIER
• 4" GRAVEL BASE
6/14 TYP. PERIMETER FTG.

C 16 SECTION LOOKING EAST 1/4" = 1'-0"

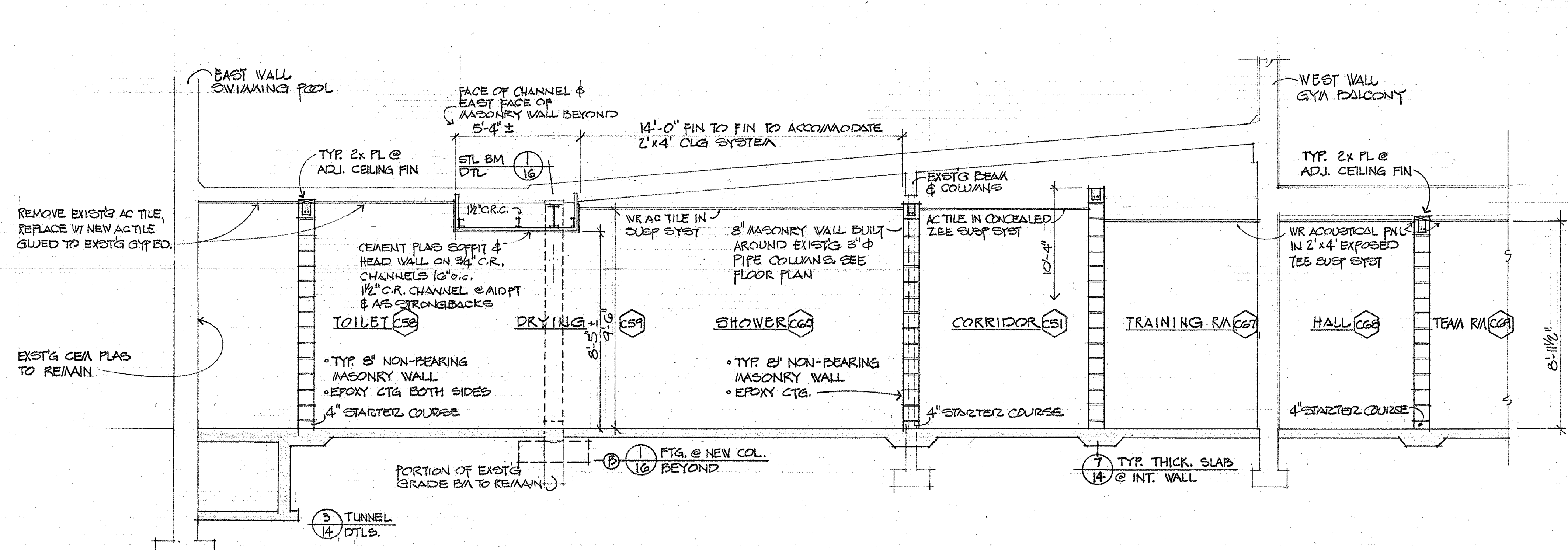
EAST WALL SWIMMING POOL
FACE OF CHANNEL & EAST FACE OF MASONRY WALL BEYOND
5'-4" ±
14'-0" FIN TO FIN TO ACCOMMODATE 2'x4' CLG SYSTEM
WEST WALL GYM BALCONY
TYP. 2x PL @ ADJ. CEILING FIN
STL BM DTL 1/16
1 1/2" C.R.C.
EXST'G BEAM & COLUMNS
TYP. 2x PL @ ADJ. CEILING FIN
REMOVE EXIST'G AC TILE, REPLACE W/ NEW AC TILE GLUED TO EXST'G GYP BD.
CEMENT PLAS SOFFIT & HEAD WALL ON 3/4" C.R. CHANNELS 16" o.c. 1 1/2" C.R. CHANNEL @ MIDPT & AS STRONGBACKS
WR AC TILE IN SUSP SYST
8" MASONRY WALL BUILT AROUND EXIST'G 3" ⌀ PIPE COLUMNS. SEE FLOOR PLAN
AC TILE IN CONCEALED ZEE SUSP SYST
10'-4"
WR ACOUSTICAL PNL IN 2'x4' EXPOSED TEE SUSP SYST
TOILET C58
DRYING C59
8'-5" ±
9'-6"
SHOWER C60
CORRIDOR C51
TRAINING RM C67
HALL C68
TEAM RM C69
8'-11 1/2"
EXST'G CEM PLAS TO REMAIN
• TYP. 8" NON-BEARING MASONRY WALL
• EPOXY CTG BOTH SIDES
4" STARTER COURSE
• TYP. 8" NON-BEARING MASONRY WALL
• EPOXY CTG.
4" STARTER COURSE
4" STARTER COURSE
PORTION OF EXST'G GRADE BM TO REMAIN
B 1/16 FTG. @ NEW COL. BEYOND
7/14 TYP. THICK. SLAB @ INT. WALL
3/14 TUNNEL DTLS.

D 16 SECTION LOOKING NORTH 1/4" = 1'-0"

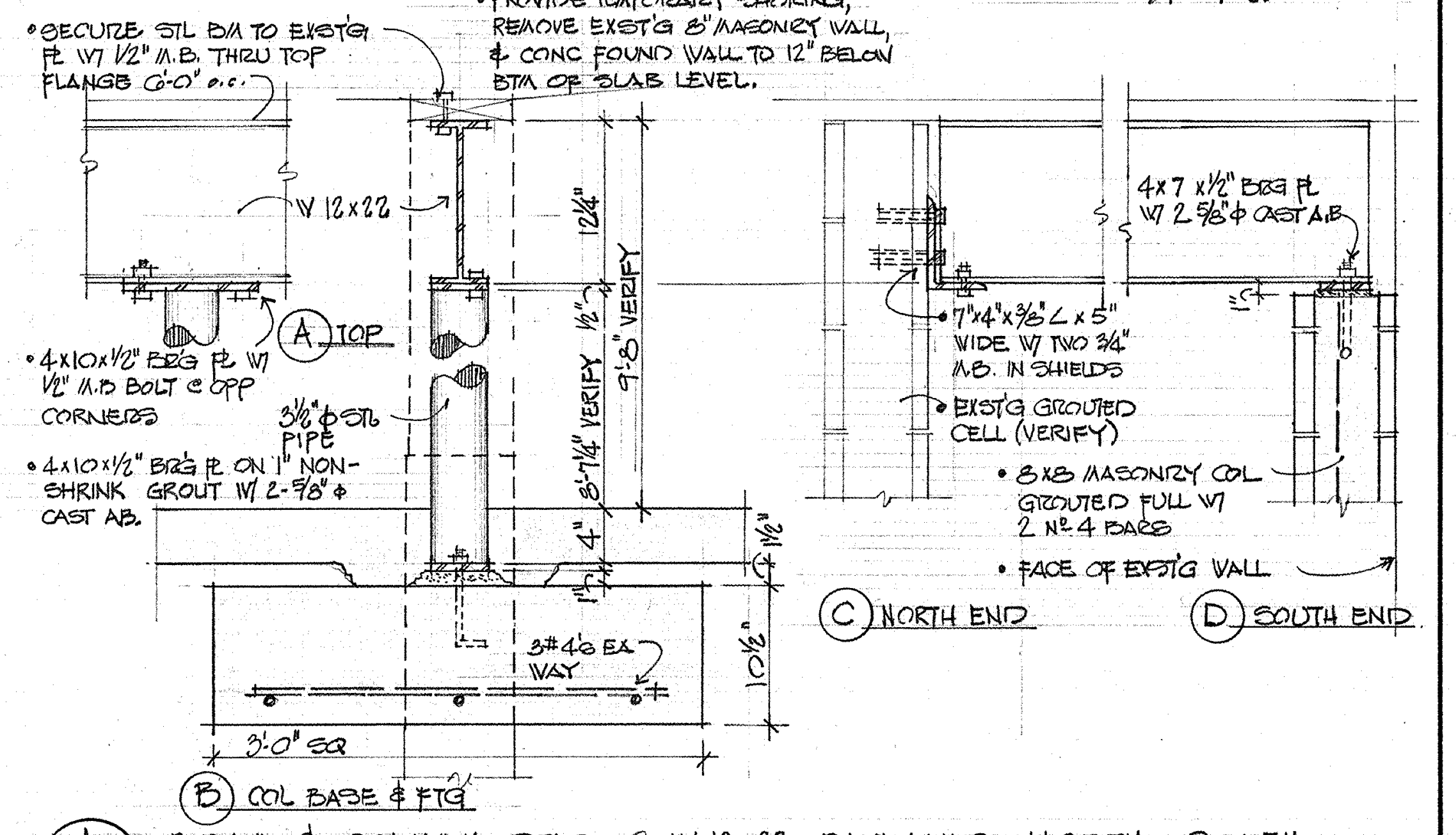
• SECURE STL BM TO EXST'G PL W/ 1/2" M.B. THRU TOP FLANGE 6'-0" o.c.
• PROVIDE TEMPORARY SHORING, REMOVE EXST'G 8" MASONRY WALL, & CONC FOUND WALL TO 12" BELOW BTM OF SLAB LEVEL.
W 12x22
12 1/4"
A TOP
• 4x10x1/2" BRG PL W/ 1/2" M.B. BOLT @ OPP CORNERS
3 1/2" ⌀ STD PIPE
• 4x10x1/2" BRG PL ON 1" NON-SHRINK GROUT W/ 2-5/8" ⌀ CAST AB.
1/2"
8'-7 1/4" VERIFY
9'-8" VERIFY
4"
1 1/2"
3#4's EA WAY
10 1/2"
3'-0" SQ
B COL BASE & FTG
4x7 x1/2" BRG PL W/ 2 5/8" ⌀ CAST A.B.
• 7"x4"x3/8" ∠ x 5" WIDE W/ TWO 3/4" M.B. IN SHIELDS
• EXST'G GROUTED CELL (VERIFY)
• 8x8 MASONRY COL GROUTED FULL W/ 2 No 4 BARS
• FACE OF EXST'G WALL
C NORTH END
D SOUTH END

1/16 BEAM & COLUMN DTLS @ W 12x22 RUNNING NORTH - SOUTH ACROSS BOY'S LOCKER RM No 56 1" = 1'-0"

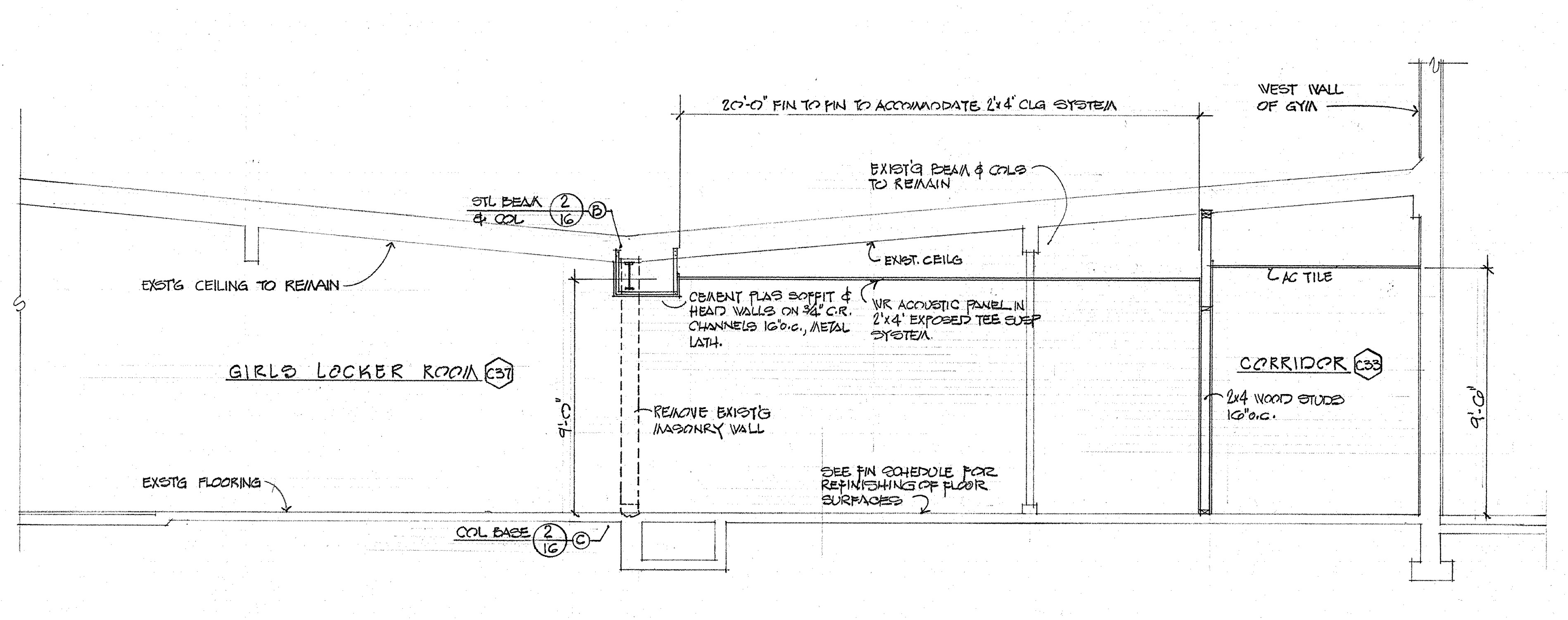
20'-0" FIN TO FIN TO ACCOMMODATE 2'x4' CLG SYSTEM
WEST WALL OF GYM
EXIST'G BEAM & COLS TO REMAIN
STL BEAM & COL 2/16 B
EXST'G CEILING TO REMAIN
EXST. CEILG
AC TILE
CEMENT PLAS SOFFIT & HEAD WALLS ON 3/4" C.R. CHANNELS 16" o.c., METAL LATH.
WR ACOUSTIC PANEL IN 2'x4' EXPOSED TEE SUSP SYSTEM.
GIRLS LOCKER ROOM C37
9'-0"
REMOVE EXIST'G MASONRY WALL
CORRIDOR C33
2x4 WOOD STUDS 16" o.c.
9'-0"
EXST'G FLOORING
SEE FIN SCHEDULE FOR REFINISHING OF FLOOR SURFACES
COL BASE 2/16 C

E 16 SECTION LOOKING NORTH 1/4" = 1'-0"

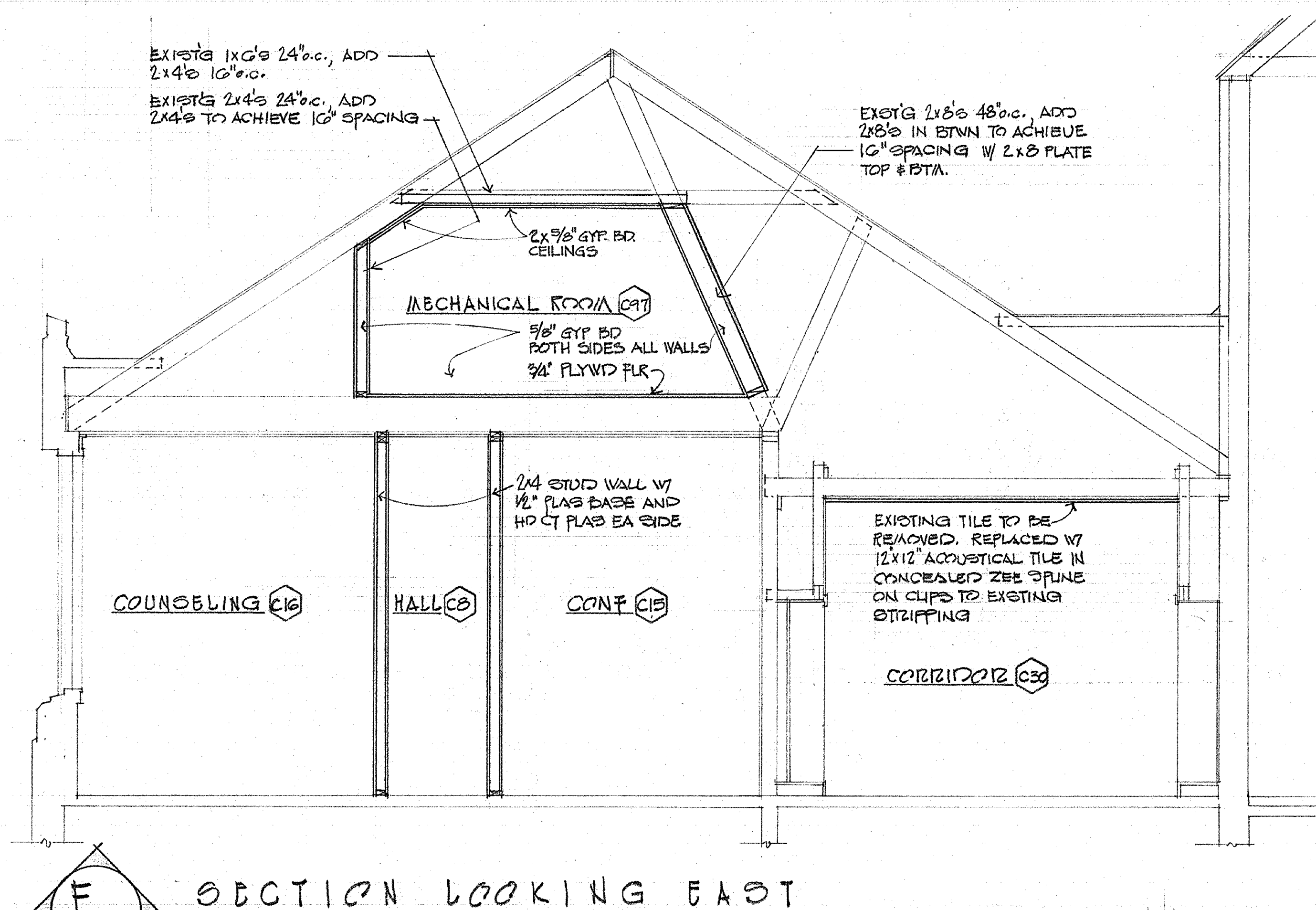
EXIST'G 1x6's 24" o.c., ADD 2x4's 16" o.c.
EXIST'G 2x4's 24" o.c., ADD 2x4's TO ACHIEVE 16" SPACING
EXST'G 2x8's 48" o.c., ADD 2x8's IN BTWN TO ACHIEVE 16" SPACING W/ 2x8 PLATE TOP & BTM.
2x 5/8" GYP. BD. CEILINGS
MECHANICAL ROOM C97
5/8" GYP BD BOTH SIDES ALL WALLS
3/4" PLYWD FLR
2x4 STUD WALL W/ 1/2" PLAS BASE AND HD CT PLAS EA SIDE
EXISTING TILE TO BE REMOVED. REPLACED W/ 12"x12" ACOUSTICAL TILE IN CONCEALED ZEE SPLINE ON CLIPS TO EXISTING STRIPPING
COUNSELING C16
HALL C8
CONF C15
CORRIDOR C30

F 16 SECTION LOOKING EAST 1/4" = 1'-0"

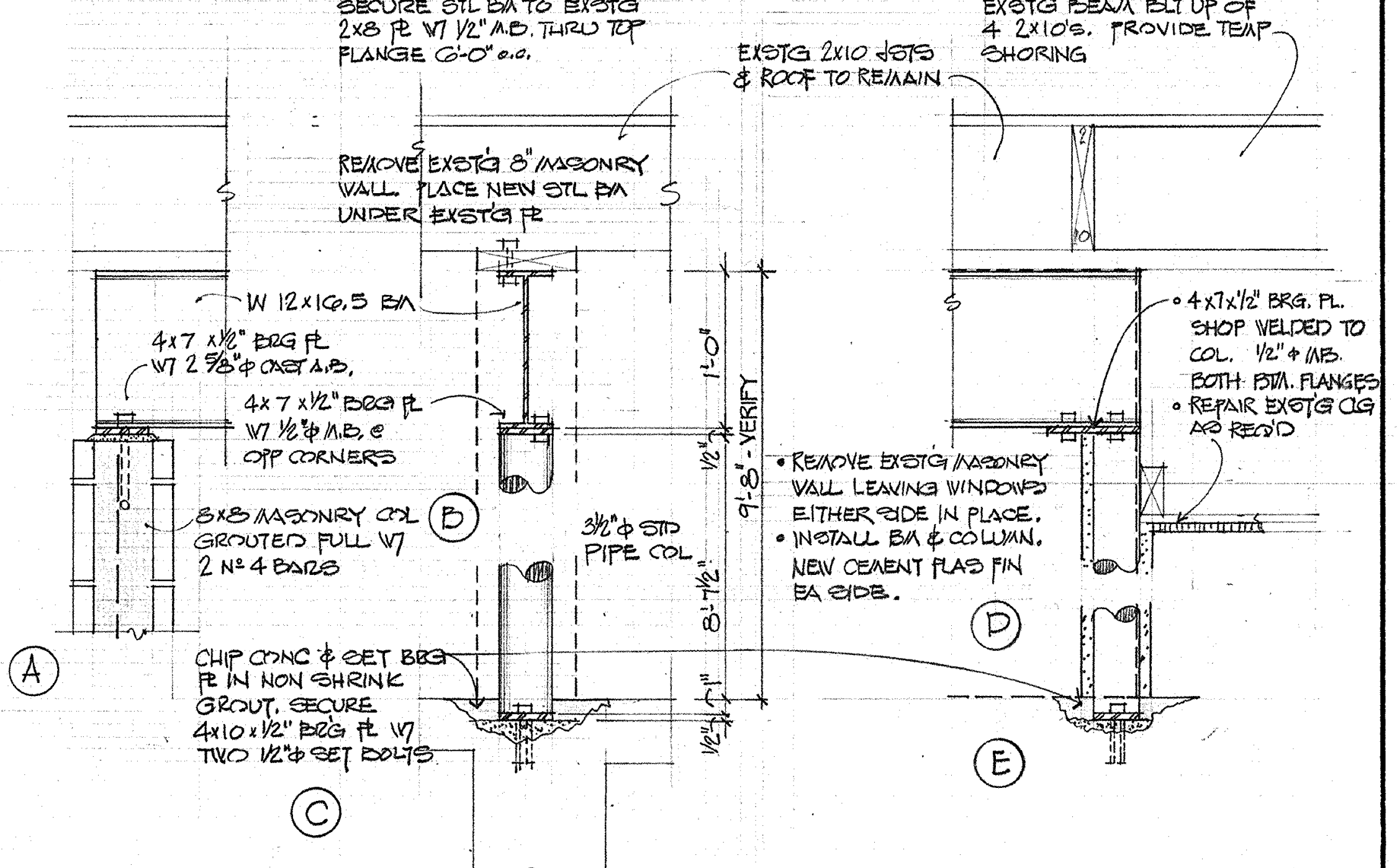
SECURE STL BM TO EXST'G 2x8 PL W/ 1/2" M.B. THRU TOP FLANGE 6'-0" o.c.
EXST'G 2x10 JSTS & ROOF TO REMAIN
EXST'G BEAM BLT UP OF 4 2x10's. PROVIDE TEMP SHORING
REMOVE EXST'G 8" MASONRY WALL. PLACE NEW STL BM UNDER EXST'G PL
W 12x16.5 BM
4x7 x1/2" BRG PL W/ 2 5/8" ⌀ CAST A.B.
4x7 x1/2" BRG PL W/ 1/2" ⌀ M.B. @ OPP CORNERS
8x8 MASONRY COL GROUTED FULL W/ 2 No 4 BARS
B
3 1/2" ⌀ STD PIPE COL
1'-0"
1/2"
9'-8" - VERIFY
8'-7 1/2"
1"
1/2"
• REMOVE EXST'G MASONRY WALL LEAVING WINDOWS EITHER SIDE IN PLACE.
• INSTALL BM & COLUMN. NEW CEMENT PLAS FIN EA SIDE.
• 4x7x1/2" BRG. PL. SHOP WELDED TO COL. 1/2" ⌀ MB. BOTH BTM. FLANGES
• REPAIR EXST'G CLG AS REQ'D
CHIP CONC & SET BRG PL IN NON SHRINK GROUT. SECURE 4x10 x 1/2" BRG PL W/ TWO 1/2" ⌀ SET BOLTS
A
C
D
E

2/16 BEAM & COLUMN DTLS @ W 12x16.5 RUNNING NORTH - SOUTH THRU GIRLS DRSS'G RM. 1" = 1'-0"

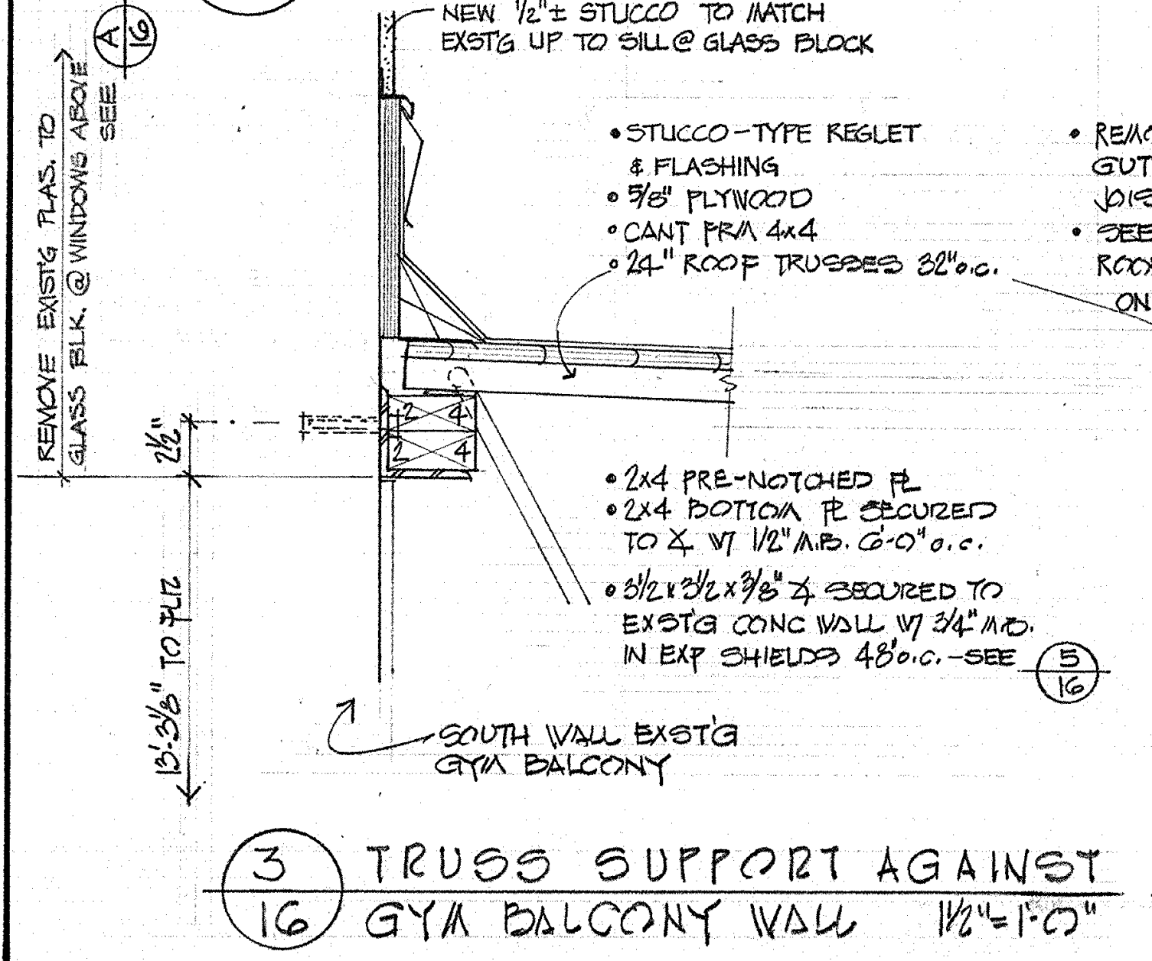
NEW 1/2" ± STUCCO TO MATCH EXST'G UP TO SILL @ GLASS BLOCK
REMOVE EXST'G PLAS. TO GLASS BLK. @ WINDOWS ABOVE SEE A/16
• STUCCO-TYPE REGLET & FLASHING
• 5/8" PLYWOOD
• CANT FRM 4x4
• 24" ROOF TRUSSES 32" o.c.
2 1/2"
• 2x4 PRE-NOTCHED PL
• 2x4 BOTTOM PL SECURED TO ∠ W/ 1/2" M.B. 6'-0" o.c.
• 3 1/2 x 3 1/2 x 3/8" ∠ SECURED TO EXST'G CONC WALL W/ 3/4" M.B. IN EXP SHIELDS 48" o.c. - SEE 5/16
13'-3 3/8" TO FLR
SOUTH WALL EXST'G GYM BALCONY

3/16 TRUSS SUPPORT AGAINST GYM BALCONY WALL 1 1/2" = 1'-0"

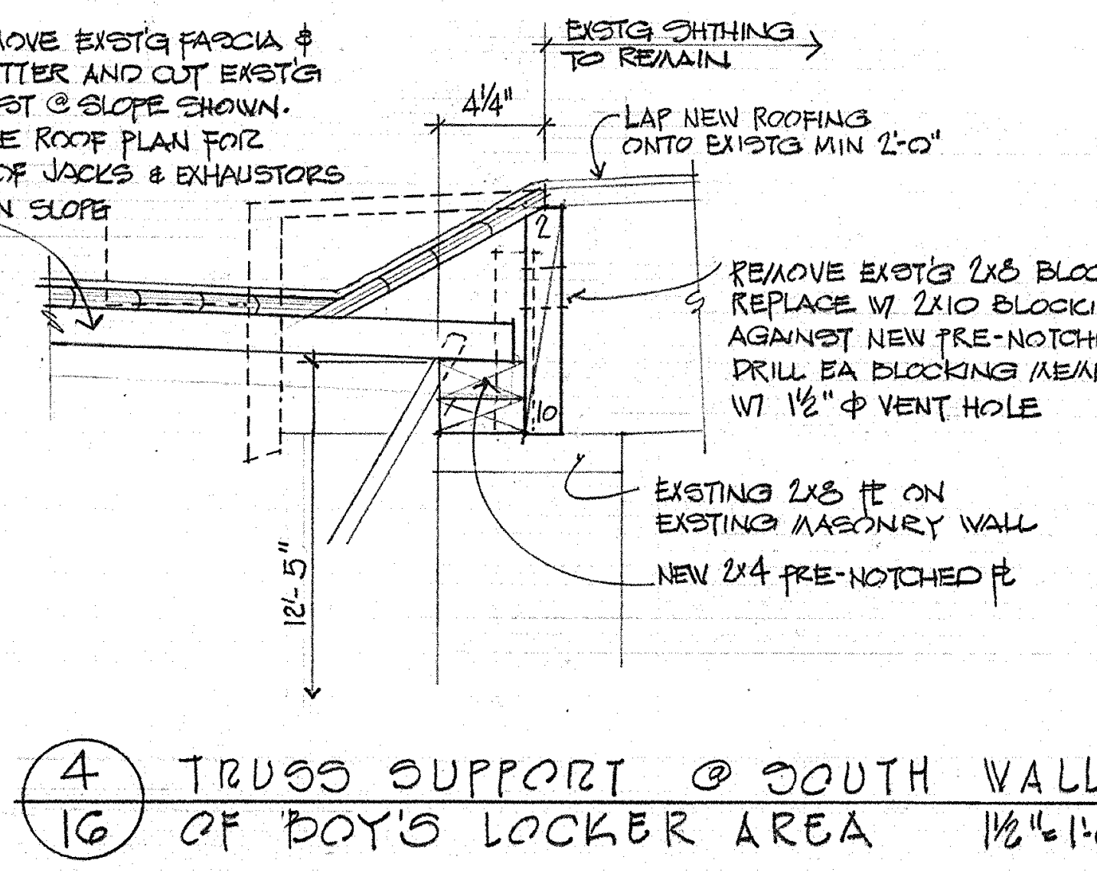
• REMOVE EXST'G FASCIA & GUTTER AND CUT EXST'G JOIST @ SLOPE SHOWN.
• SEE ROOF PLAN FOR ROOF JACKS & EXHAUSTORS ON SLOPE
EXST'G SHTHING TO REMAIN
4 1/4"
LAP NEW ROOFING ONTO EXIST'G MIN 2'-0"
REMOVE EXST'G 2x8 BLOCKING REPLACE W/ 2x10 BLOCKING AGAINST NEW PRE-NOTCHED PL. DRILL EA BLOCKING MEMBER W/ 1 1/2" ⌀ VENT HOLE
EXISTING 2x8 PL ON EXISTING MASONRY WALL
NEW 2x4 PRE-NOTCHED PL
12'-5"

4/16 TRUSS SUPPORT @ SOUTH WALL OF BOY'S LOCKER AREA 1 1/2" = 1'-0"

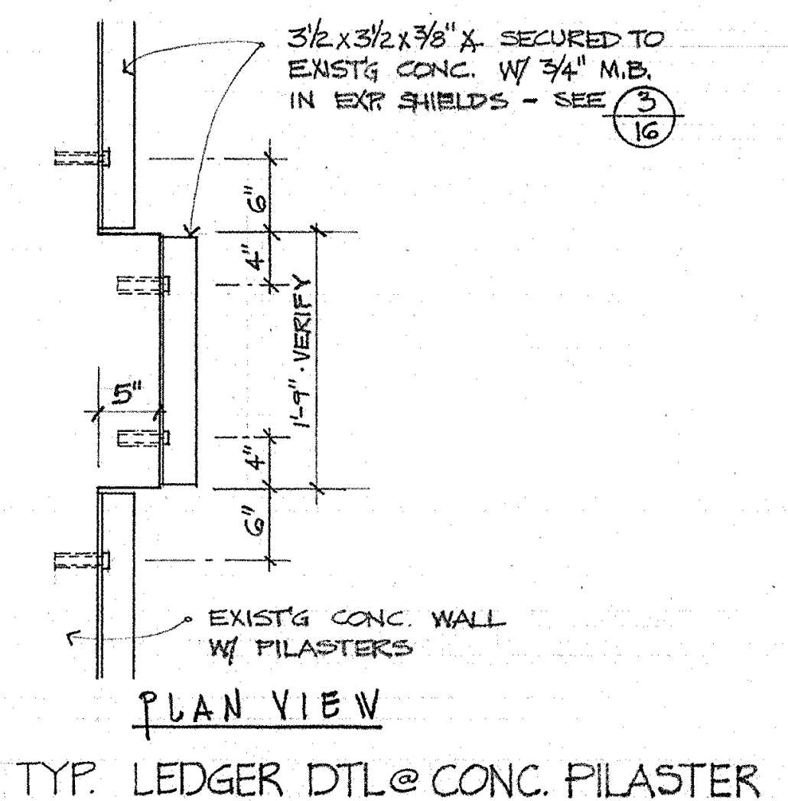
3 1/2 x 3 1/2 x 3/8" ∠ SECURED TO EXIST'G CONC. W/ 3/4" M.B. IN EXP. SHIELDS - SEE 3/16
6"
4"
5"
1'-9" - VERIFY
4"
6"
EXIST'G CONC. WALL W/ PILASTERS
PLAN VIEW

5/16 TYP. LEDGER DTL @ CONC. PILASTER GYM BALCONY WALL 3/4" = 1'-0"

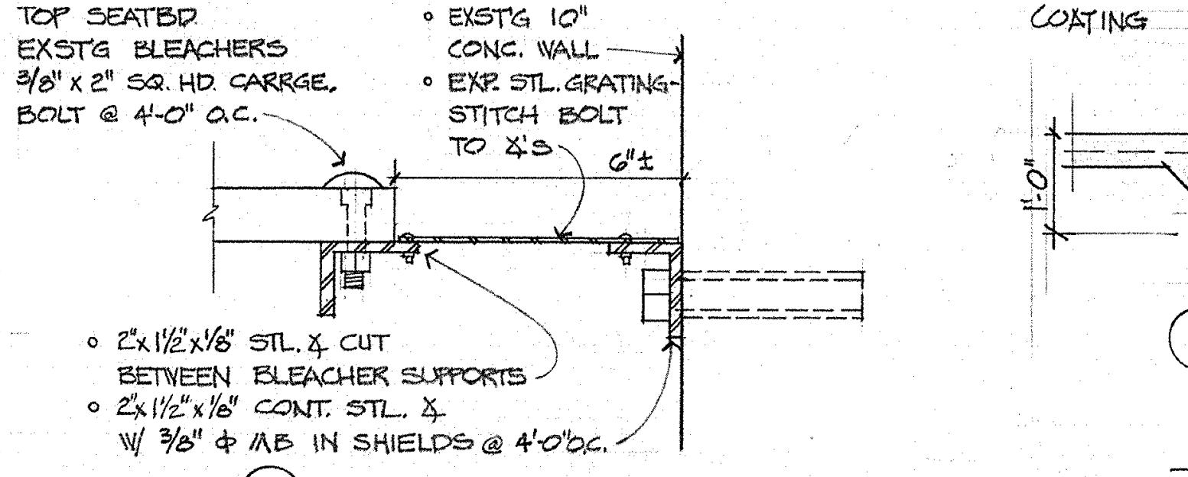
• TOP SEATBD EXST'G BLEACHERS
• 3/8" x 2" SQ. HD. CARRGE. BOLT @ 4'-0" O.C.
• EXST'G 10" CONC. WALL
• EXP. STL. GRATING - STITCH BOLT TO ∠'S
6" ±
• 2"x1 1/2"x1/8" STL. ∠ CUT BETWEEN BLEACHER SUPPORTS
• 2"x1 1/2"x1/8" CONT. STL. ∠ W/ 3/8" ⌀ MB IN SHIELDS @ 4'-0" o.c.

A SECTION - TOP OF BLEACHERS

PLAN SECTION @ ENDS SIMILAR. TURN GRATING DOWN BOTH ENDS OF BLEACHERS. FINISH UPPER CORNER BOTH ENDS W/ 2"x1 1/2"x1/8" STL. ∠ OVER GRATING.

6/16 STL. GRATING @ EXIST BLEACHERS RELOCATED - GYM C31 3" = 1'-0"

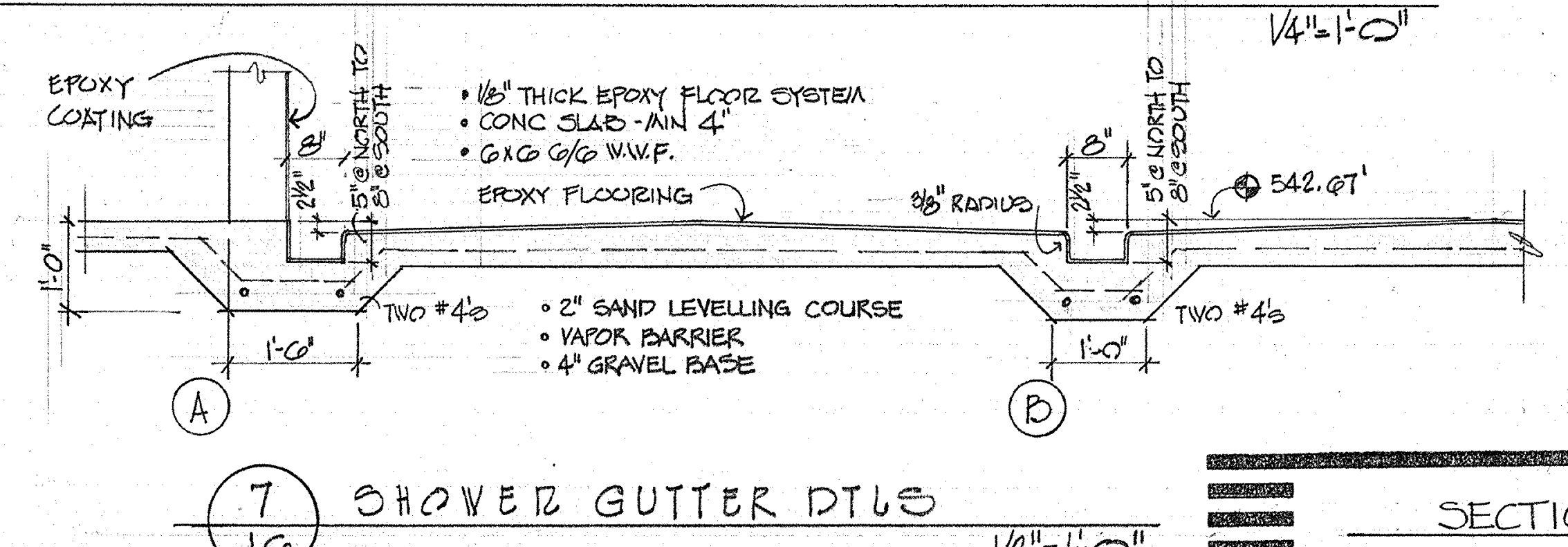
EPOXY COATING
8"
2 1/2"
5" @ NORTH TO 8" @ SOUTH
• 1/8" THICK EPOXY FLOOR SYSTEM
• CONC SLAB - MIN 4"
• 6x6 6/6 W.W.F.
EPOXY FLOORING
3/8" RADIUS
542.67'
1'-0"
TWO #4's
• 2" SAND LEVELLING COURSE
• VAPOR BARRIER
• 4" GRAVEL BASE
1'-6"
1'-0"
TWO #4's
A
B

7/16 SHOWER GUTTER DTLS 1/2" = 1'-0"

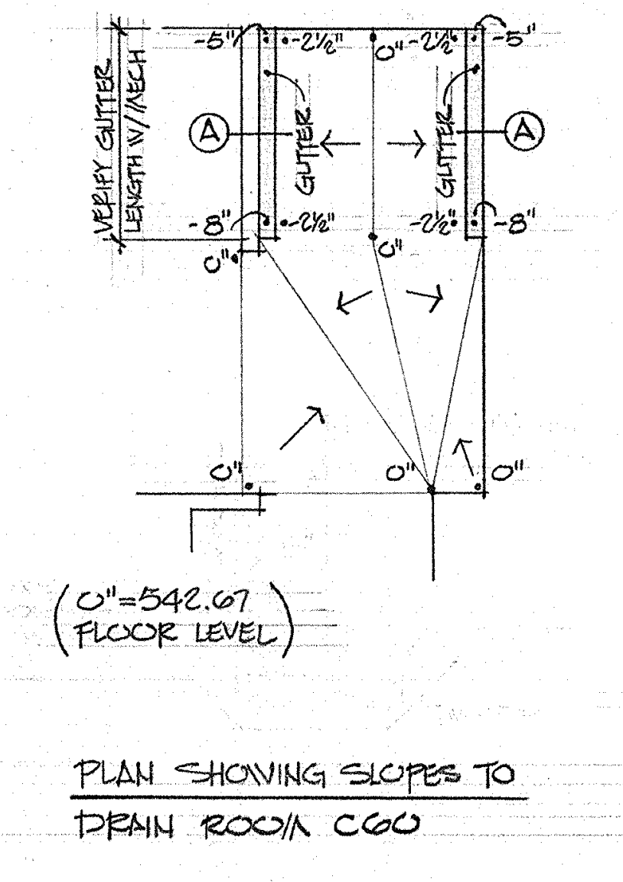
VERIFY GUTTER LENGTH W/ MECH
-5"
-2 1/2"
0"
-2 1/2"
-5"
A
GUTTER
GUTTER
A
-8"
-2 1/2"
0"
-2 1/2"
-8"
0"
0"
0"
0"
(0" = 542.67 FLOOR LEVEL)

PLAN SHOWING SLOPES TO DRAIN ROOM C60

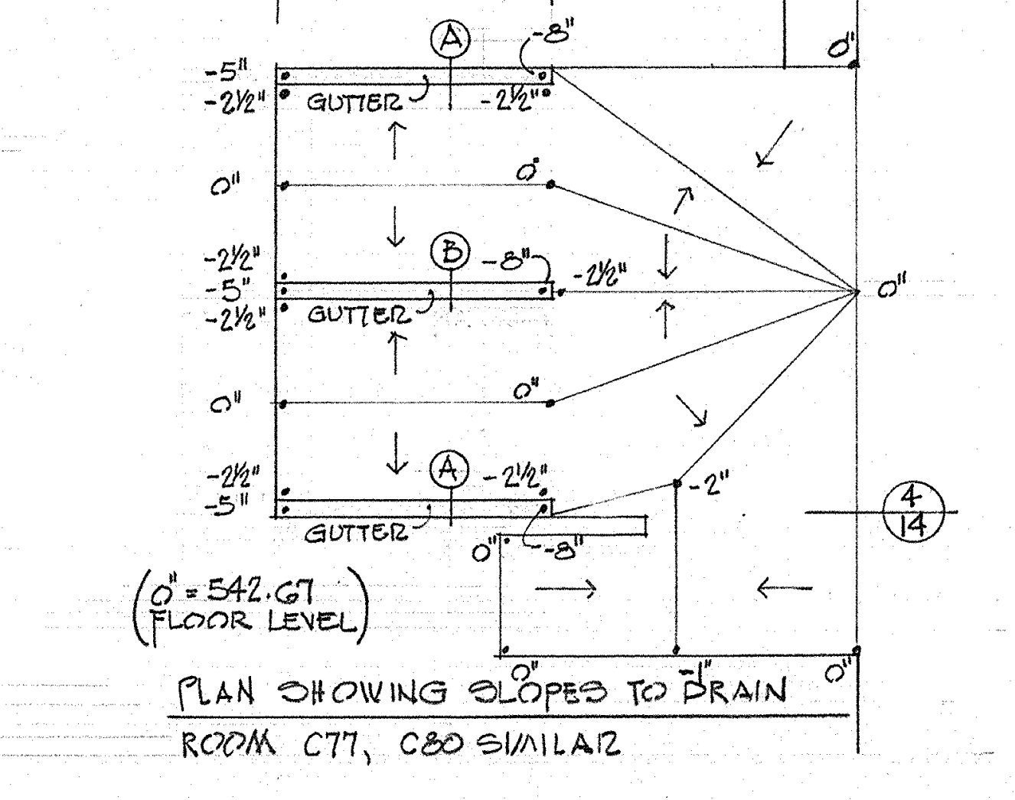
VERIFY GUTTER LENGTH W/ MECH
A
-8"
-5"
-2 1/2"
GUTTER
-2 1/2"
0"
0"
0"
-2 1/2"
-5"
-2 1/2"
B
-8"
GUTTER
-2 1/2"
0"
0"
0"
-2 1/2"
-5"
A
-2 1/2"
GUTTER
-2"
0"
-8"
0"
-1"
0"
4/14
(0" = 542.67 FLOOR LEVEL)

PLAN SHOWING SLOPES TO DRAIN ROOM C77, C80 SIMILAR

SECTIONS, DETAILS - SECTOR C

SWEET HOME HIGH SCHOOL
ADDITIONS AND ALTERATIONS 1974
DISTRICT 55 LINN COUNTY, OREGON

ARCHITECTS
HAMLIN, MARTIN, SCHULTZ & GEYER
AIA
159 W. 12TH EUGENE, OREGON 97401

A
16
JOB NO.

REGISTERED ARCHITECT
CLARE K. HAMLIN
Clare K Hamlin
EUGENE, OREGON
STATE OF OREGON

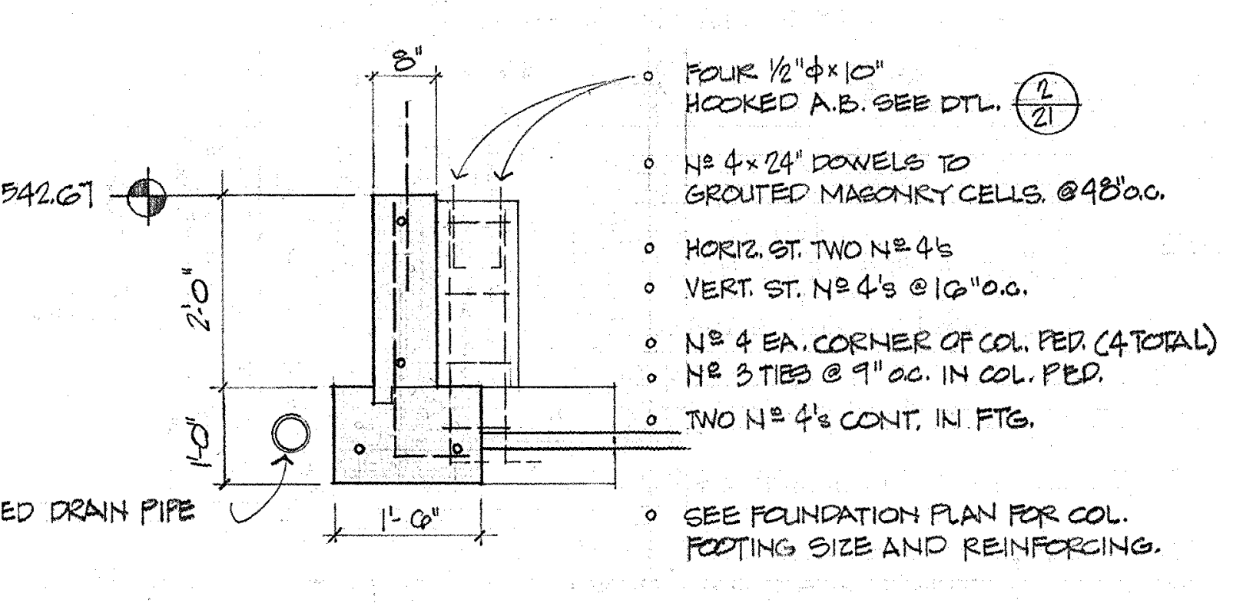

1/17 EAST/WEST GYM FOOTING 1/2"=1'-0"

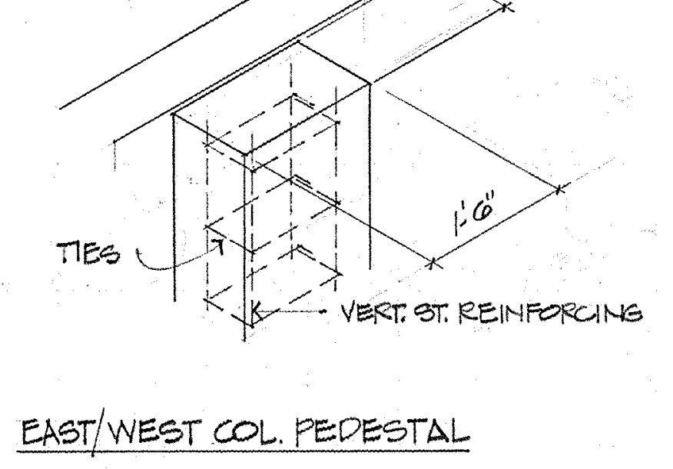

EAST/WEST COL PEDESTAL

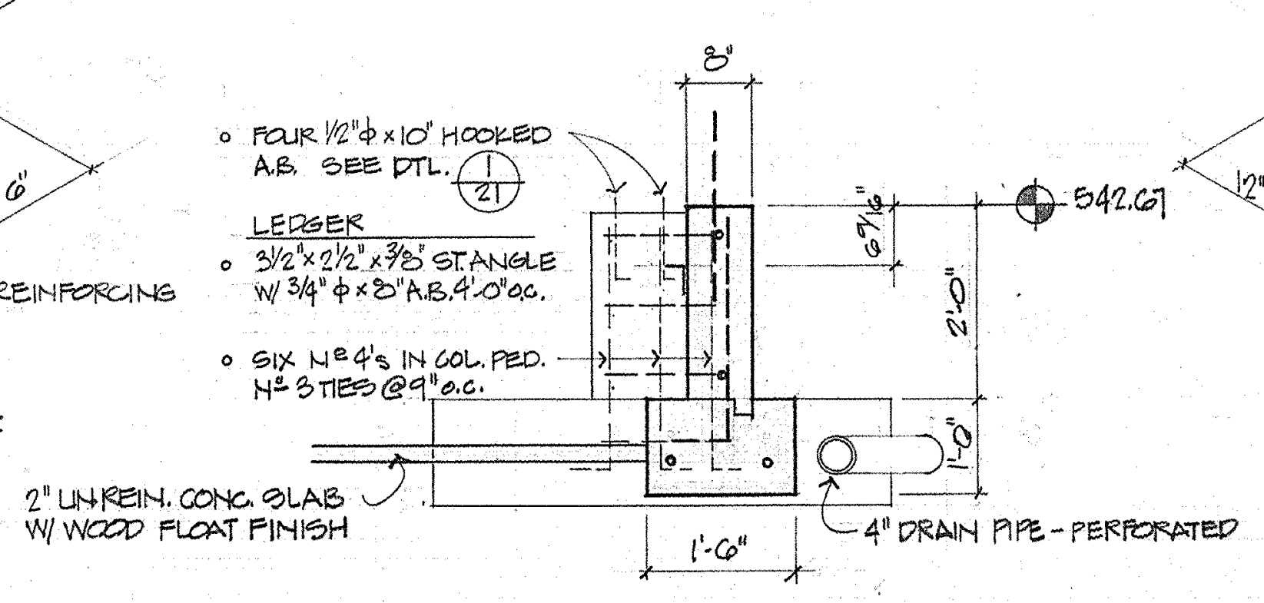

2/17 SOUTH WALL GYM FOOTING 1/2"=1'-0"

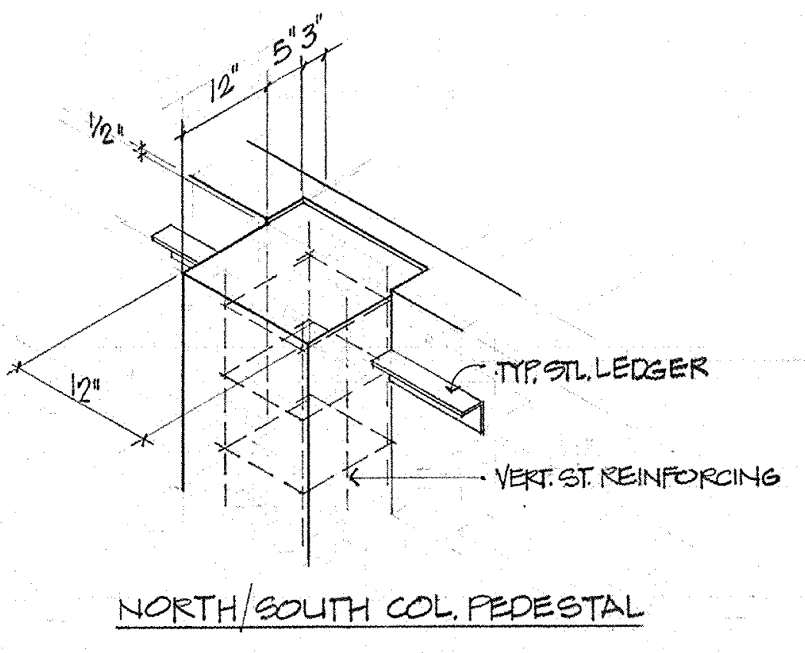

NORTH/SOUTH COL PEDESTAL

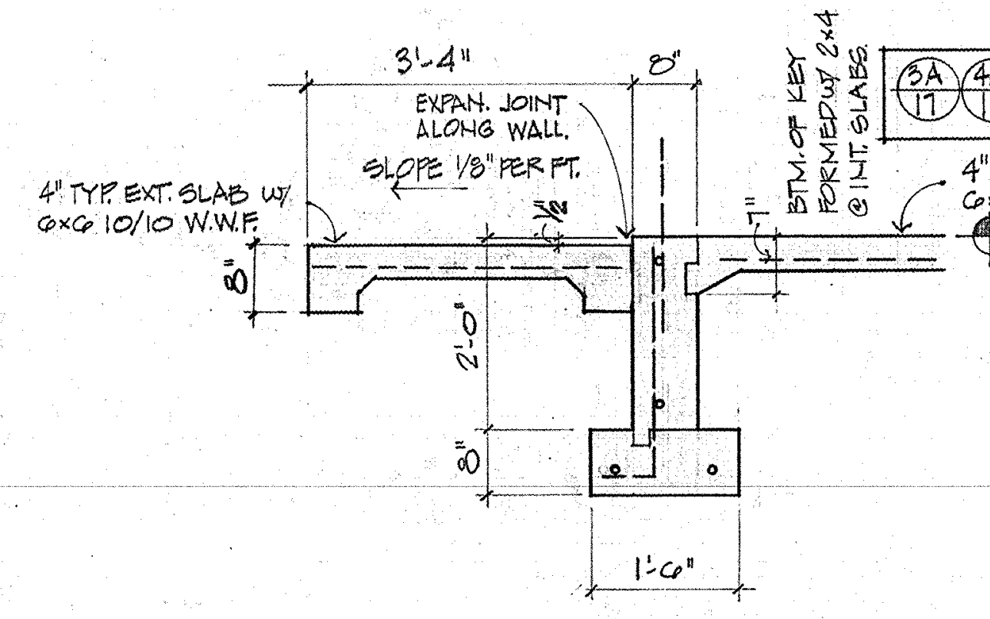

3/17 EXTERIOR WALL FOOTING @ SLABS 1/2"=1'-0"

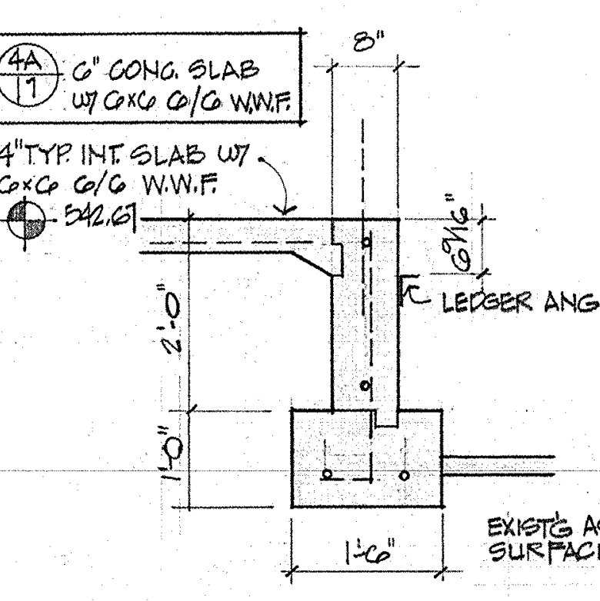

4/17 INTERIOR WALL FOOTING 1/2"=1'-0"

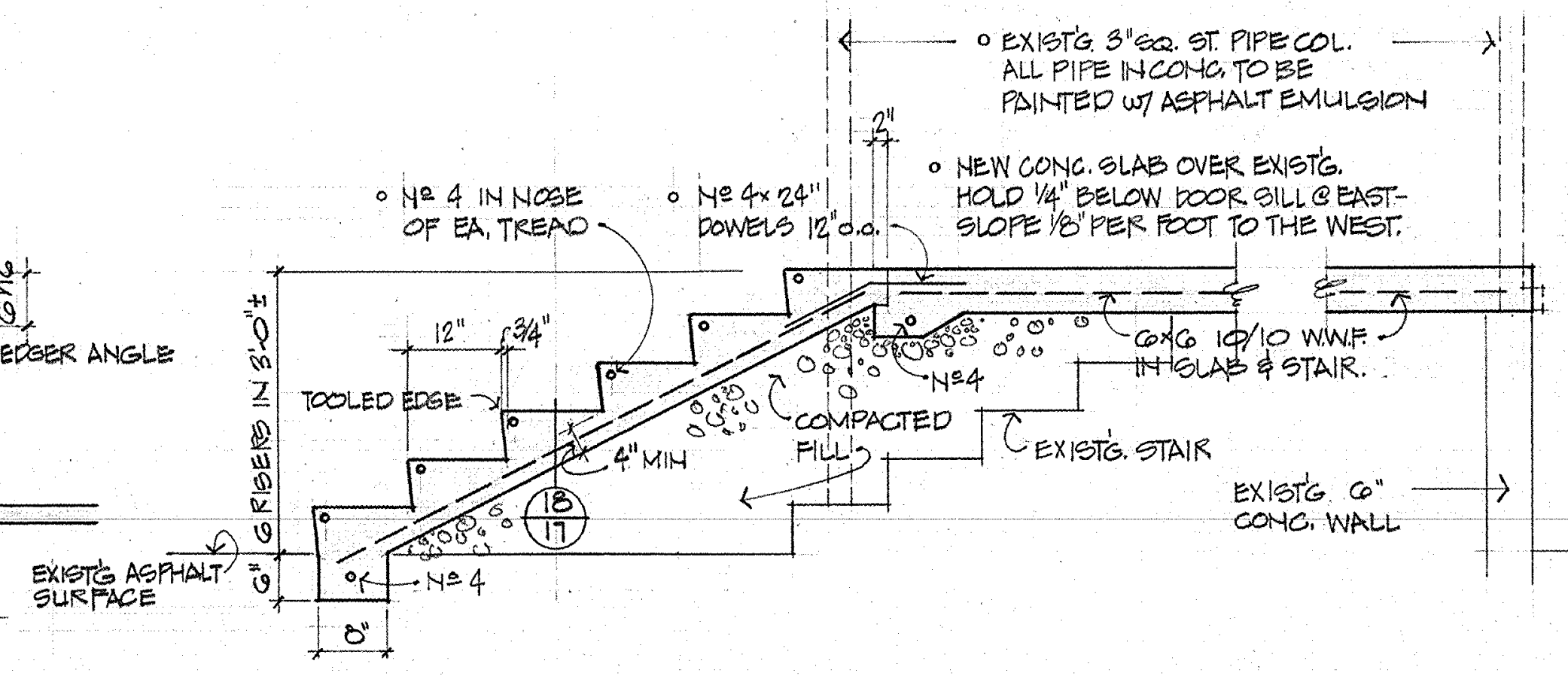

5/17 STAIR & SLAB @ DRY STORAGE RM. 1/2"=1'-0"

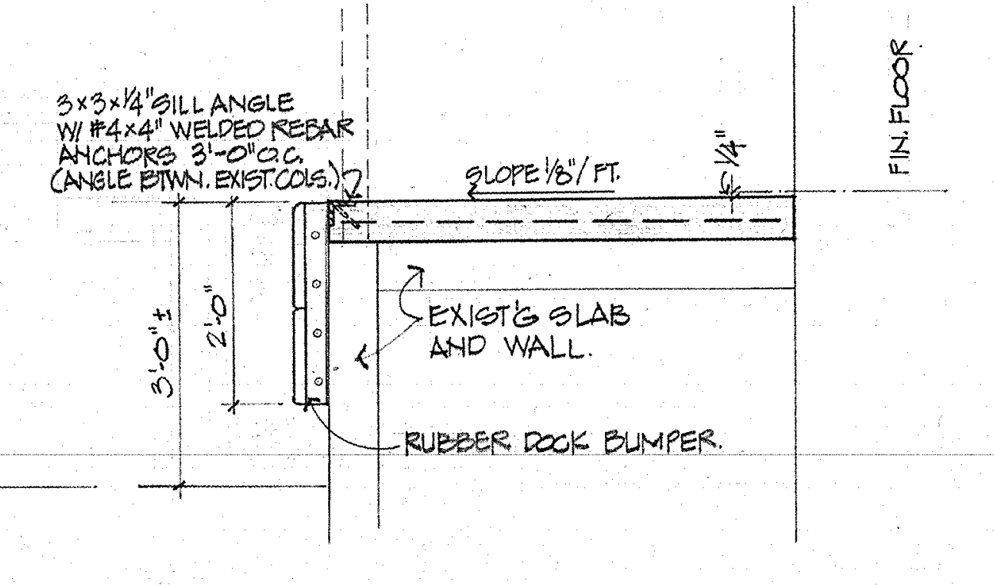

6/17 NEW LANDING SLAB @ DRY STORAGE RM. 1/2"=1'-0"

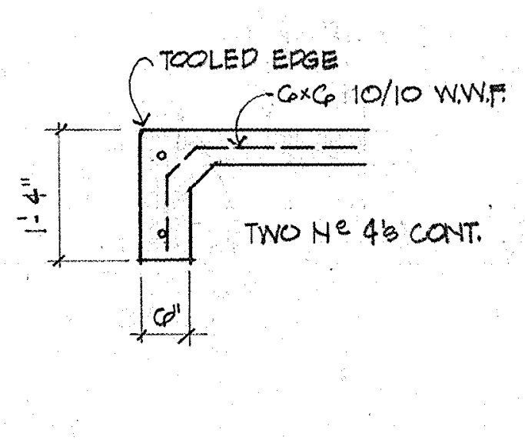

7/17 SLAB EDGE 1/2"=1'-0"

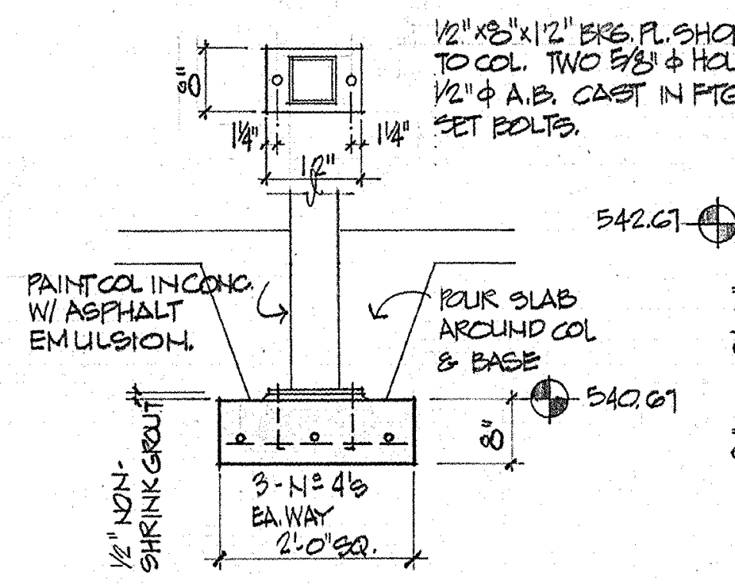

8/17 COL. FOOTING 1/2"=1'-0"

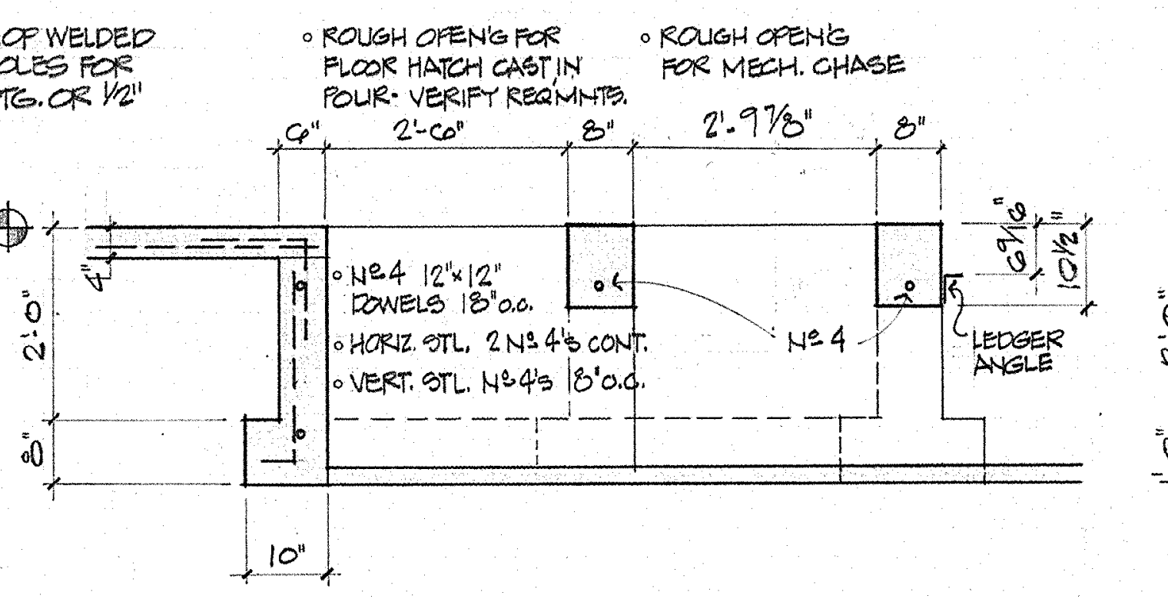

9/17 TUNNEL FOR MECH. CHASE AND FLOOR ACCESS HATCH 1/2"=1'-0"

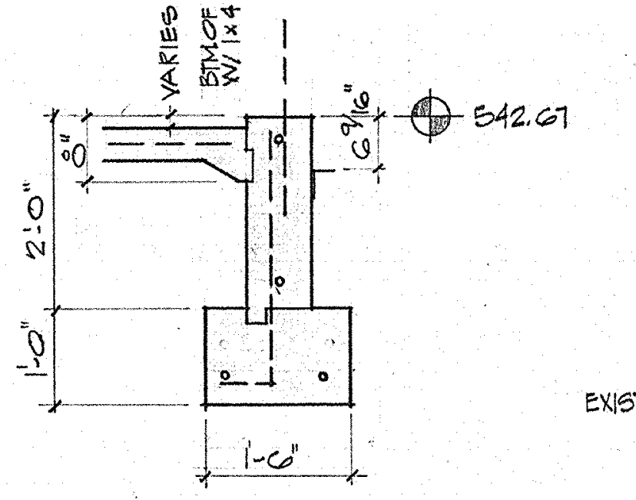

10/17 EXTERIOR WALL FOOTING 1/2"=1'-0"

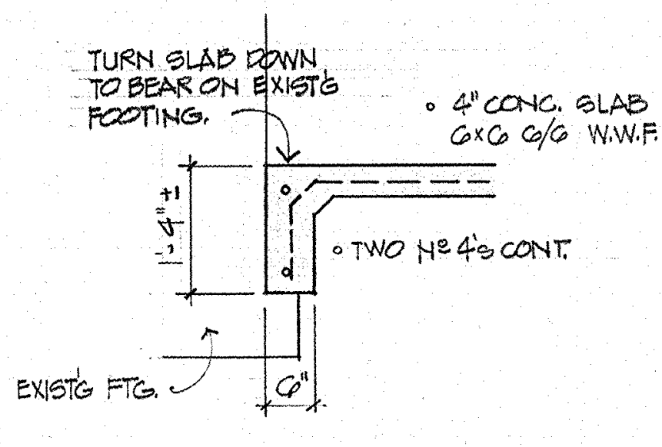

11/17 NORTH & EAST SLAB EDGE - CHLOR. RM 1/2"=1'-0"

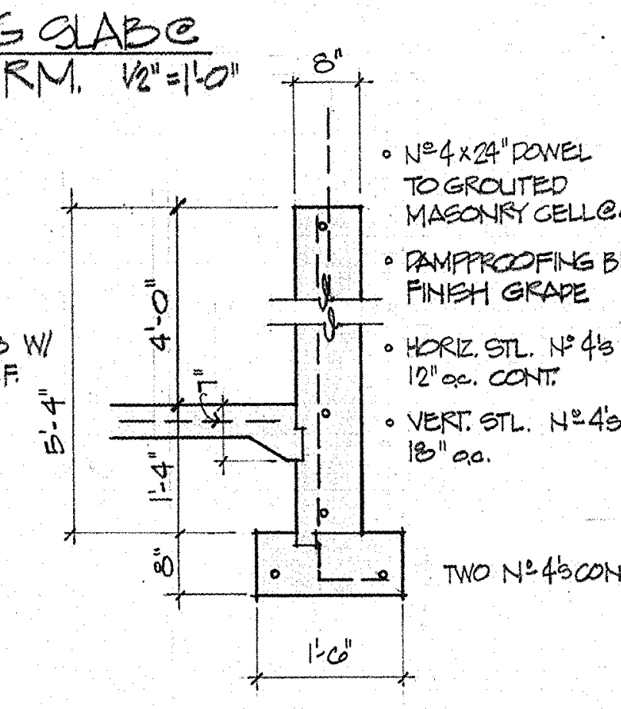

12/17 SOUTH FNDTN. CHLOR. RM. 1/2"=1'-0"

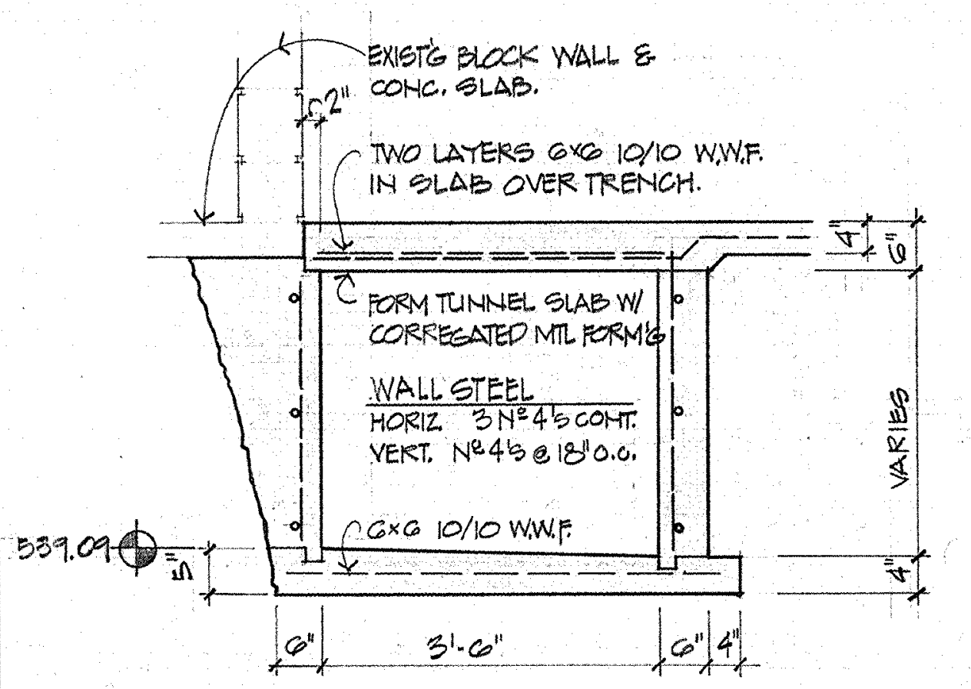

13/17 MECHANICAL TRENCH 1/2"=1'-0"

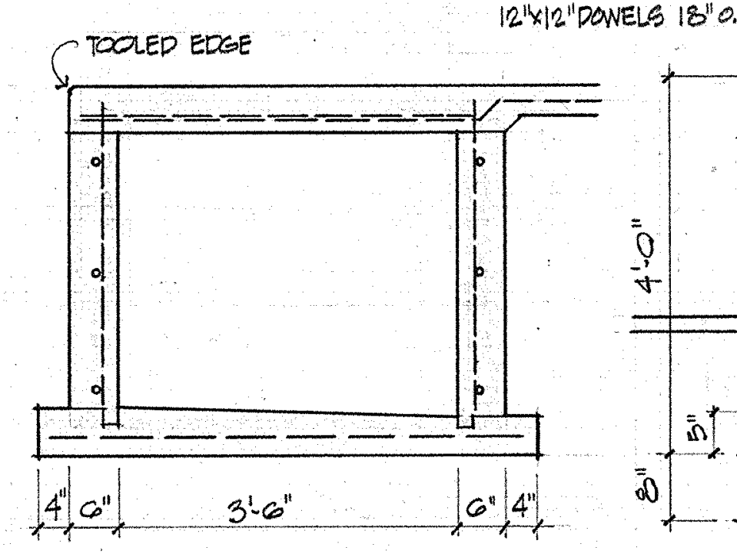

14/17 MECHANICAL TRENCH 1/2"=1'-0"

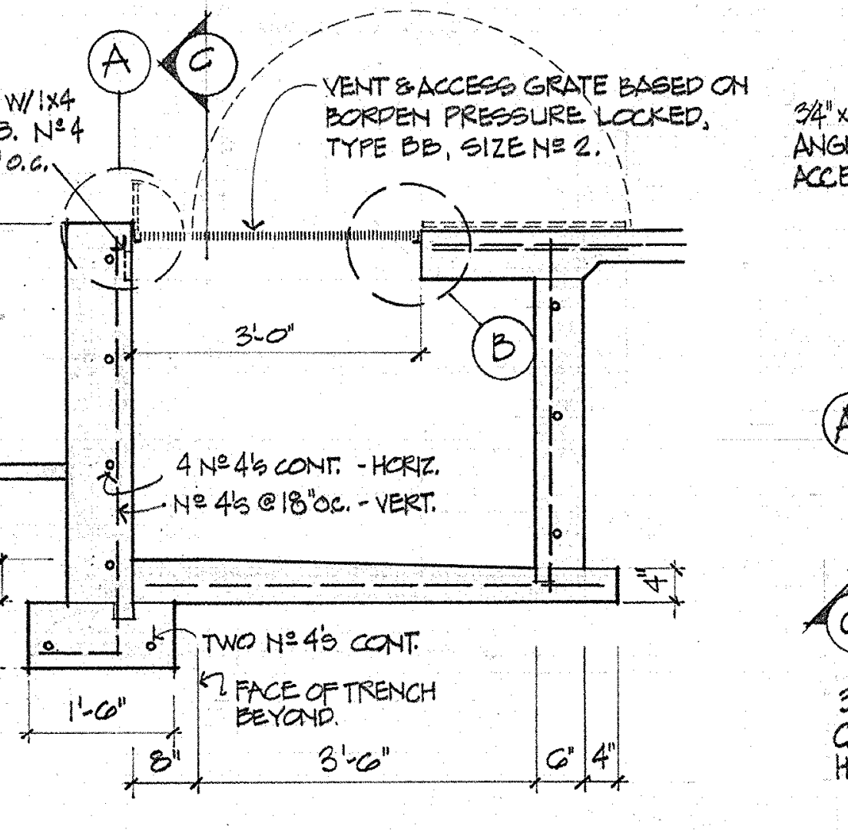

15/17 MECH. TRENCH AT VENT AND ACCESS GRATE 1/2"=1'-0"

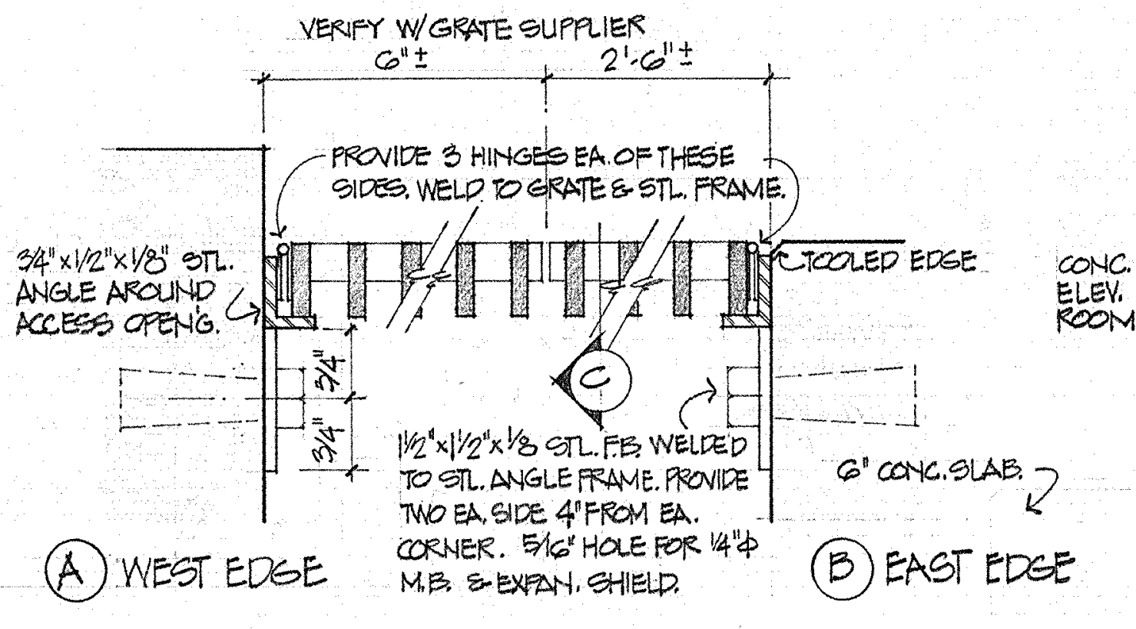

A WEST EDGE

B EAST EDGE

1/2"=1"

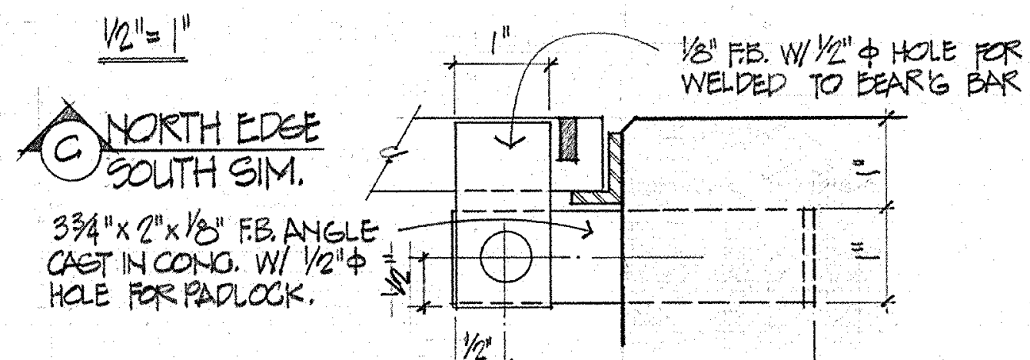

C NORTH EDGE SOUTH SIM.

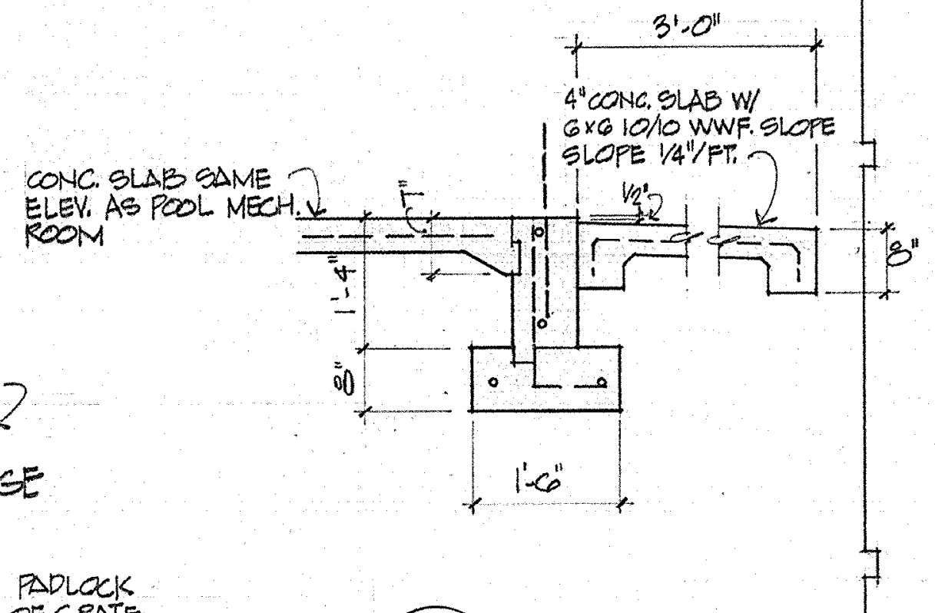

16/17 WEST FNDTN. CHLOR. RM. 1/2"=1'-0"

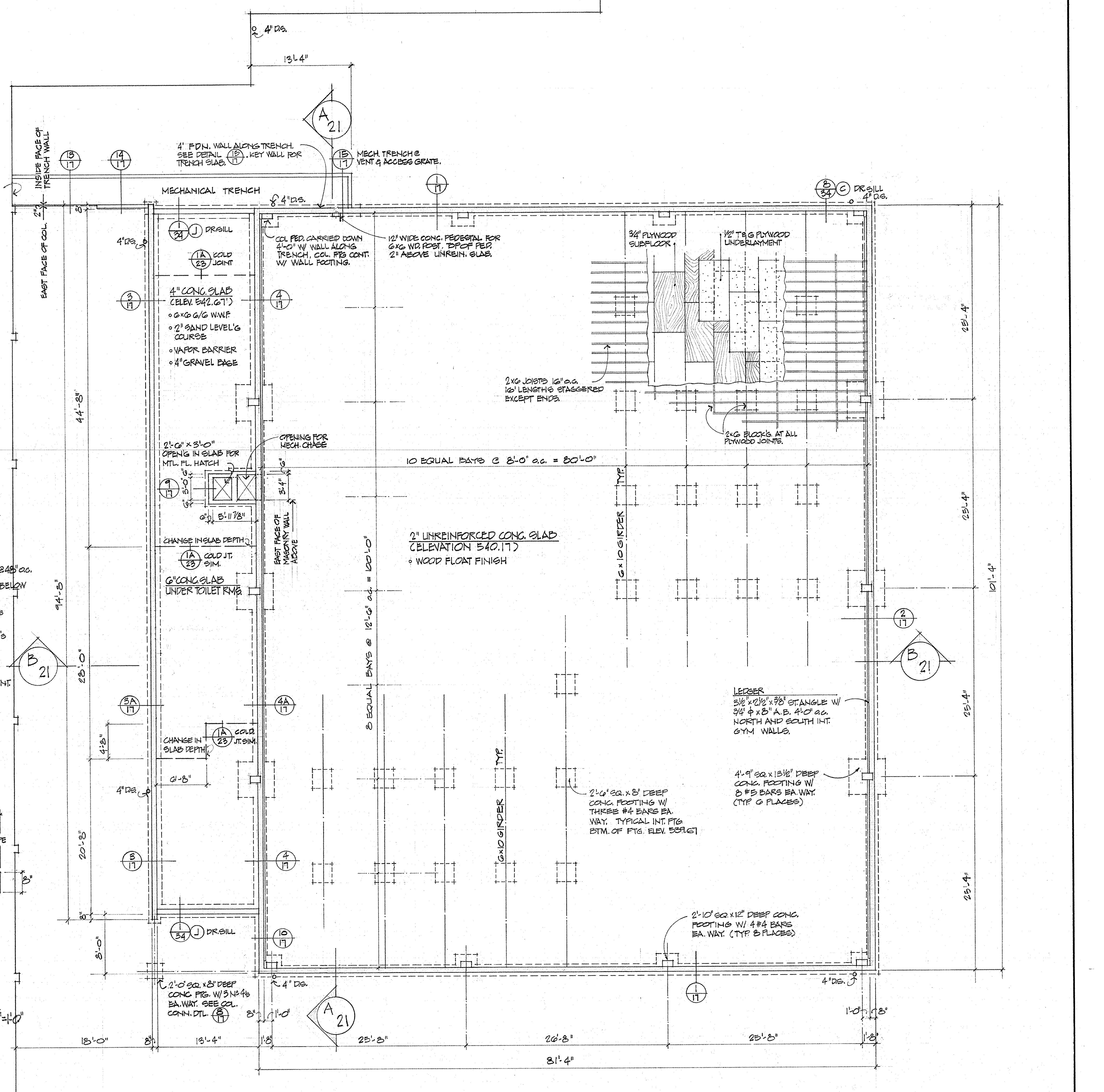

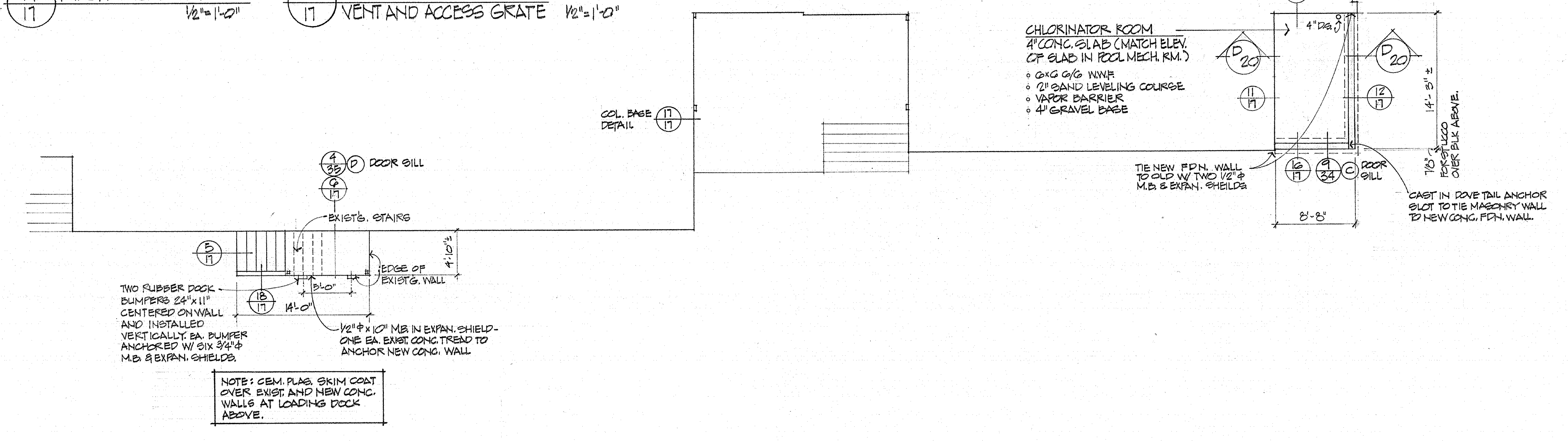

FOUNDATION PLAN
SECTOR D

1/8"=1'-0"

N

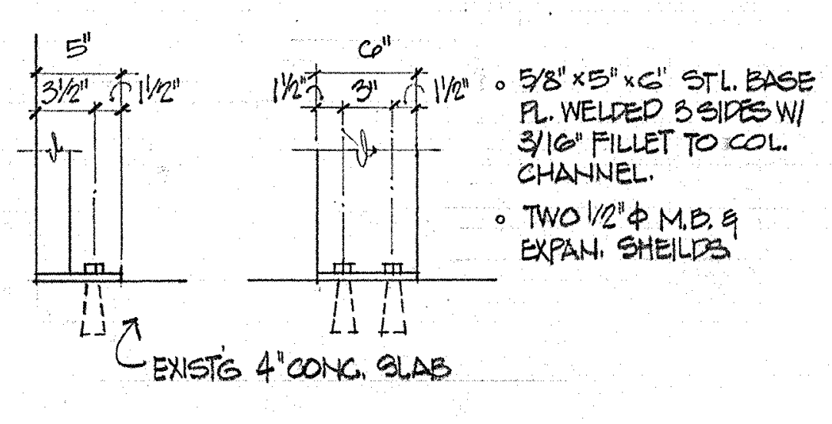

17/17 COL. BASE DETAIL LOADING DOCK ROOF 1"=1'-0"

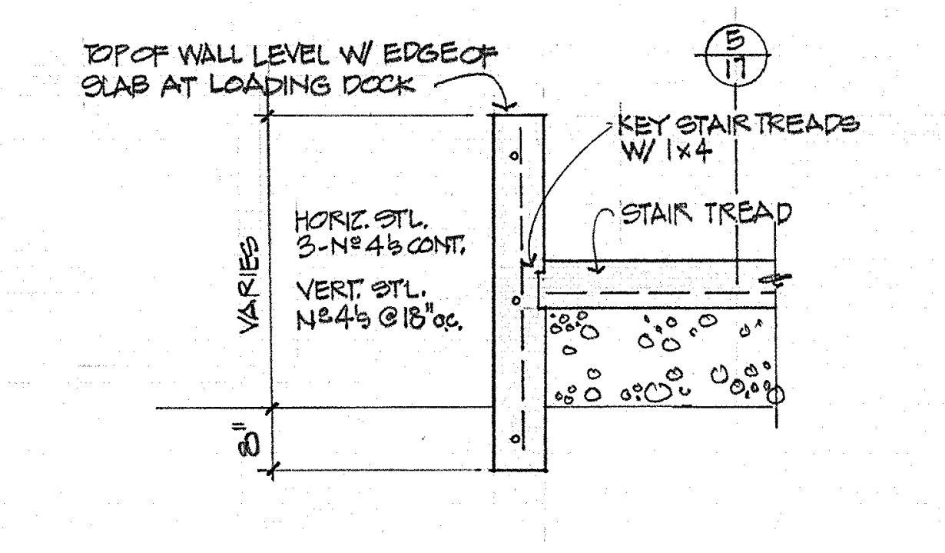

18/17 CONC. WALL @ NEW STAIR 1/2"=1'-0"

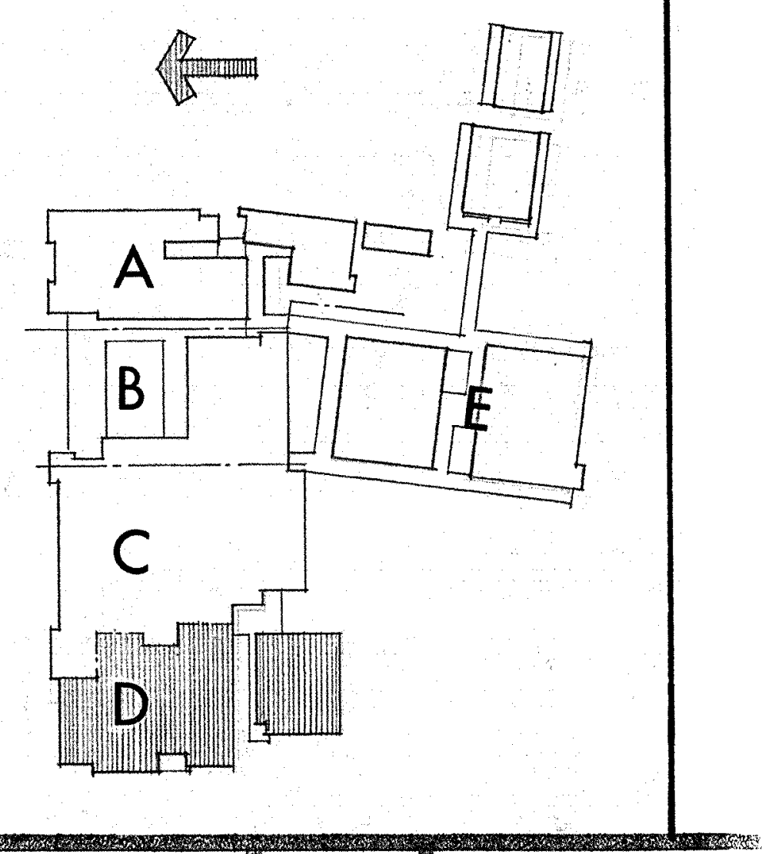

FOUNDATION PLAN & DETAILS - SECTOR D

SWEET HOME HIGH SCHOOL
ADDITIONS AND ALTERATIONS 1974
DISTRICT 55 LINN COUNTY, OREGON

ARCHITECTS
HAMLIN, MARTIN, SCHULTZ & GEYER
AIA
159 W. 12TH EUGENE, OREGON 97401

A
17
JOB NO.

REGISTERED ARCHITECT
CLARE K. HAMLIN
Clare K. Hamlin
EUGENE, OREGON
STATE OF OREGON

CAFETERIA D1
SWIMMING POOL D21
P.E. GYMNASIUM D31
KITCHEN D7
FACULTY DINING RM. D5
CORRIDOR D2
CORRIDOR D3
CORRIDOR D17
JAN D3
GIRLS D4
OFFICE D12
PREP. D8
DRY STORAGE RM. D19
FOOD TRANSPORT D18
LOADING DOCK
GARBAGE D20
POOL MECHANICAL RM. D22
CHLORINATOR ROOM D23
STORAGE RM. D24
ENTRY D29
POOL STO. D26
JAN D27
BOYS D28
GIRLS D29
FOYER D30
STO. D16
EXISTING CONC. SLAB
EXIST'G ASPHALT
PLANTING AREA
LOCATE P.E. BUILDING EAST-WEST BY 2" OFFSET FROM EXISTING PILASTER.
FOR WORK DONE ON THIS WALL SEE SECTOR C DRAWINGS
8 / 18 PLAN SECTION OF NEW GRILLES IN EXISTING STUD WALL 1"=1'-0"
1 / 18 CONC. BLK. WALL DTL. @ NORTH/SOUTH GLULAM COL'S
2 / 18 CONC. BLK. WALL DTL. @ EAST/WEST GLULAM COL'S
WALL DTLS. AT COLUMNS 3/4"=1'-0"
3 / 18 STUD WALL DTL. @ COL. A
4 / 18 STUD WALL DTL. @ COL C COL B REVERSED
5 / 18 STUD WALL DTL. @ COL F
6 / 18 STUD WALL DETAIL @ SOUTH COLS E F G
NOTES: SEE EXTERIOR ELEVATIONS FOR ADDITIONAL STUDS IN EAST AND WEST WALLS FOR STUCCO EXPANSION JOINTS. ABOVE STUD LAYOUT FOR WEST & SOUTH WALLS. EAST & NORTH WALLS SIM.
7 / 18 GYM BASE DETAIL 3"=1'-0"
#6 F.H.W.S. CNTR. SUNK @ 4'-0" O.C. SET IN 1 1/2" WD. SCREW ANCHOR.
HD. WD. BASE CONT. ALONG BLOCK WALL AND GLULAM COLS.
FINISH FLOOR
1/2" PLYWD. T.&G.
3/4" PLYWD.
A
B
C
D
E
N

FLOOR PLAN
SECTOR D

1/8"=1'-0"

COURT PAINTING NOTES:

- ALL LINES TO BE 2" SOLID EXCEPT AS NOTED
- ALL COURT LAYOUTS AND MARKINGS TO COMPLY W/ NAT'L. FED. OF STATE HIGH SCHOOL ASSOCIATIONS STANDARDS
- VERIFY LINE COLORS W/ ARCHITECT - 4 REQ'D.

LEGEND:

LINE SYMBOL	COURT	NO.	INTERIOR COURT DIMENSION
————————	MAIN BASKETBALL	1	50'-0" x 84'-0"
——— ———	PRACTICE BASKETBALL	2	46'-0" x 74'-0"
— — — —	VOLLEYBALL	3	30'-0" x 60'-0"
- - - - - - - -	BADMINTON	6	20'-0" x 44'-0"

☒ SCREW TYPE FLOOR MOUNTS - VERIFY LOCATIONS

LEGEND

═	EXST'G WALL TO REMAIN
▨	NEW WOOD STUD WALL
▥	NEW METAL STUD WALL
▨	NEW NON-BEARING MASONRY WALL
▩	NEW BEARING MASONRY WALL
▤	NEW CONCRETE WALL

FLOOR PLAN, PLAN DETAILS - SECTOR D

SWEET HOME HIGH SCHOOL
ADDITIONS AND ALTERATIONS 1974
DISTRICT 55 LINN COUNTY, OREGON

ARCHITECTS
HAMLIN, MARTIN, SCHULTZ & GEYER
AIA
159 W. 12TH EUGENE, OREGON 97401

A
18
JOB NO.

CLARE K. HAMLIN
Clare K Hamlin
EUGENE, OREGON

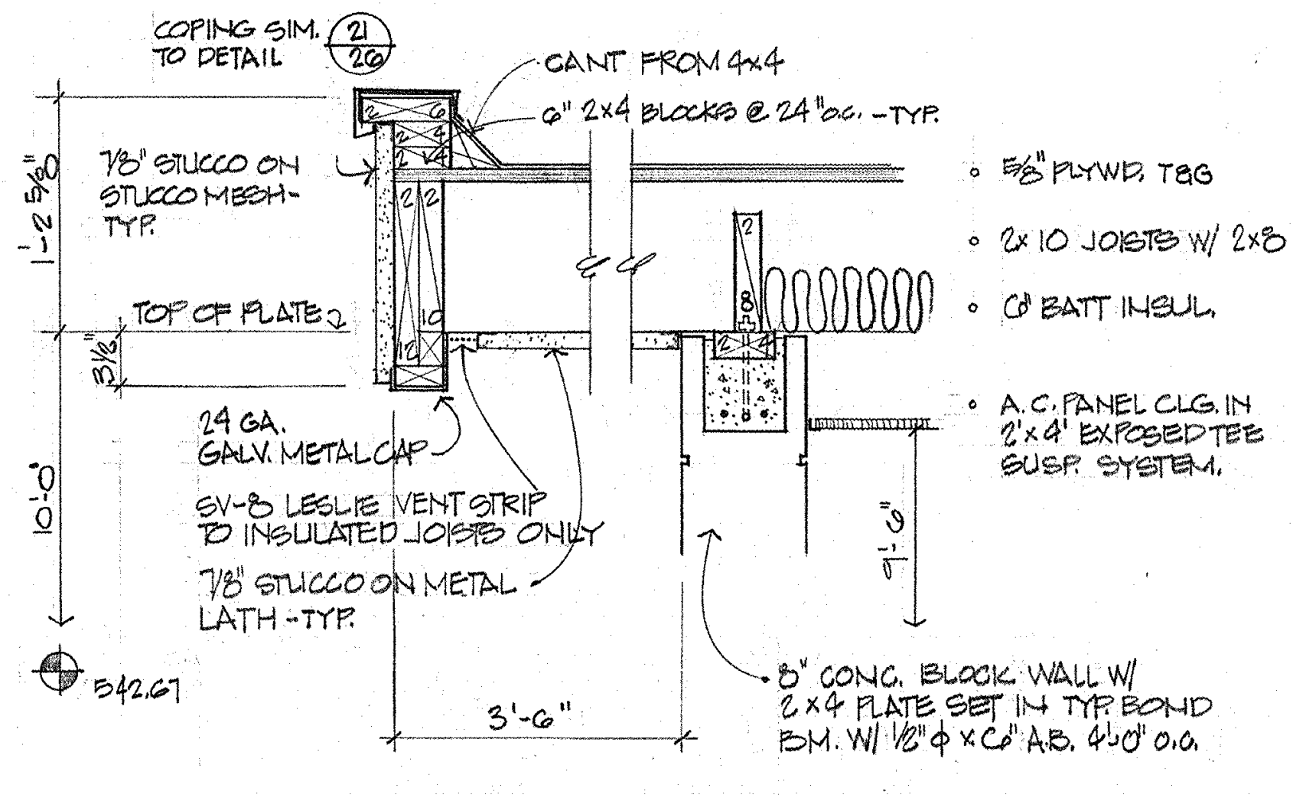
COPING SIM. TO DETAIL
CANT FROM 4x4
6" 2x4 BLOCKS @ 24" o.c. - TYP.
7/8" STUCCO ON STUCCO MESH - TYP.
TOP OF PLATE
24 GA. GALV. METAL CAP
SV-3 LESLIE VENT STRIP TO INSULATED JOISTS ONLY
7/8" STUCCO ON METAL LATH - TYP.
5/8" PLYWD. T&G
2x10 JOISTS W/ 2x8 BLKG.
6" BATT INSUL.
A.C. PANEL CLG. IN 2'x4' EXPOSED TEE SUSP. SYSTEM.
8" CONC. BLOCK WALL W/ 2x4 PLATE SET IN TYP. BOND BM. W/ 1/2" Φ x 6" A.B. 4'-0" o.c.
3'-6"
10'-0"
542.67

1/19 LOWER ROOF FASCIA
1"=1'-0"

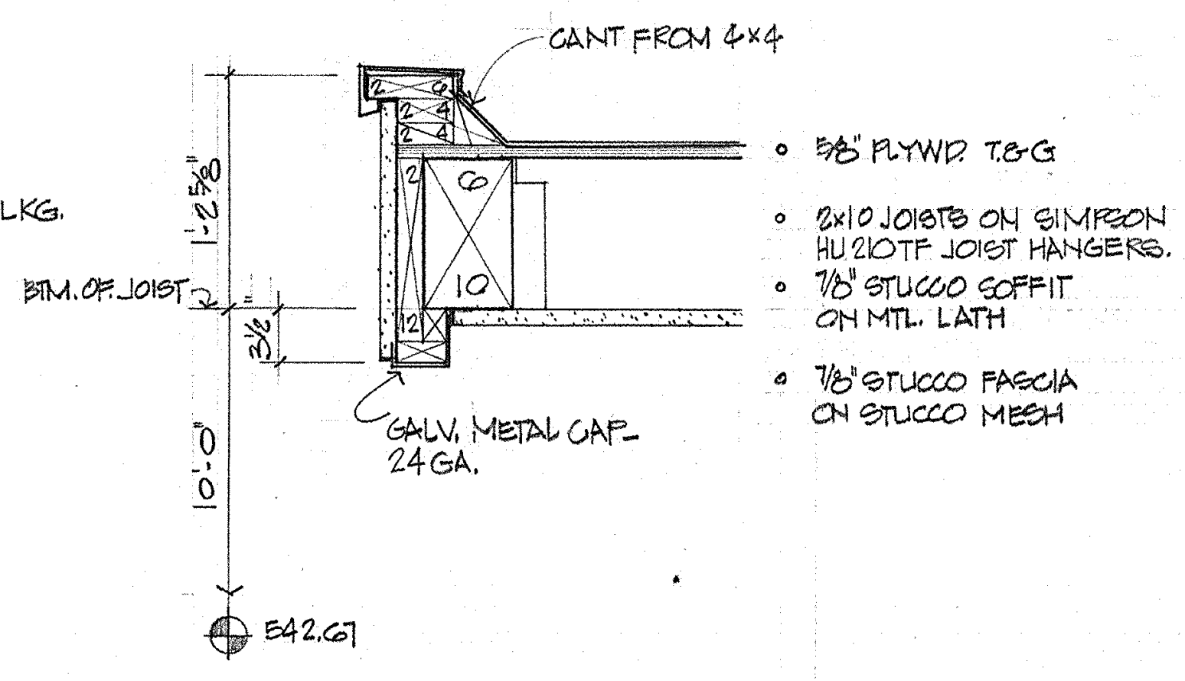
CANT FROM 4x4
5/8" PLYWD. T&G
2x10 JOISTS ON SIMPSON HU210TF JOIST HANGERS.
7/8" STUCCO SOFFIT ON MTL. LATH
7/8" STUCCO FASCIA ON STUCCO MESH
GALV. METAL CAP - 24 GA.
BM. OF JOIST
10'-0"
542.67

2/19 LOWER ROOF FASCIA AT WEST FOYER
1"=1'-0"

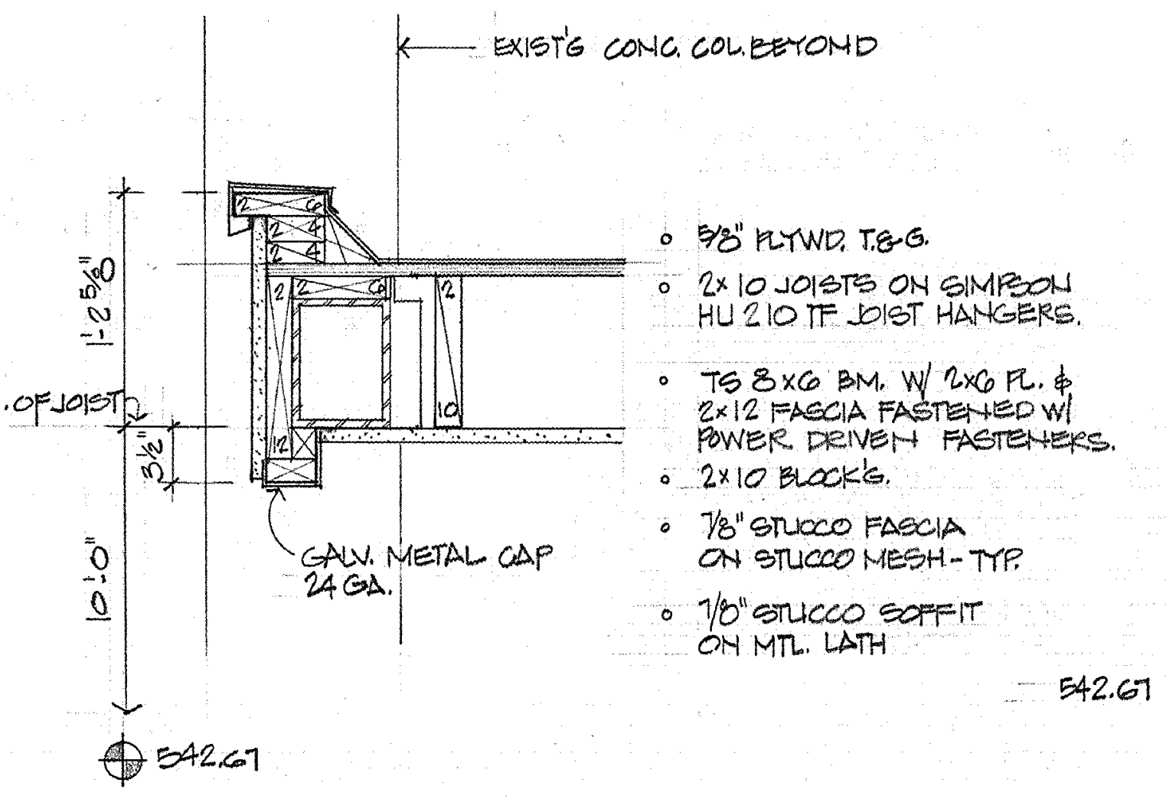
EXIST'G CONC. COL. BEYOND
5/8" PLYWD. T&G
2x10 JOISTS ON SIMPSON HU 210 TF JOIST HANGERS.
TS 8x6 BM. W/ 2x6 PL. & 2x12 FASCIA FASTENED W/ POWER DRIVEN FASTENERS.
2x10 BLOCKS.
7/8" STUCCO FASCIA ON STUCCO MESH - TYP.
7/8" STUCCO SOFFIT ON MTL. LATH
GALV. METAL CAP 24 GA.
BTM. OF JOIST
10'-0"
542.67

3/19 LOWER ROOF FASCIA WITH STEEL TUBE
1"=1'-0"

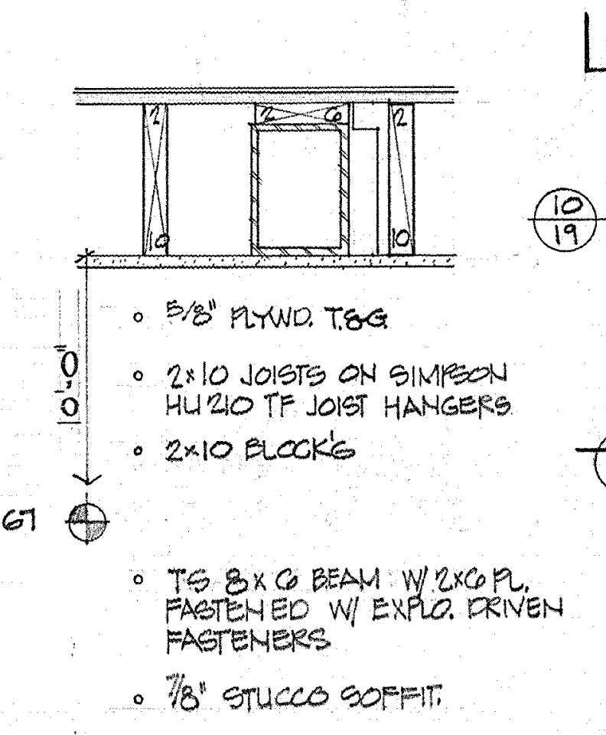
5/8" PLYWD. T&G
2x10 JOISTS ON SIMPSON HU210 TF JOIST HANGERS
2x10 BLOCKS
TS 8x6 BEAM W/ 2x6 PL. FASTENED W/ EXPLO. DRIVEN FASTENERS
7/8" STUCCO SOFFIT
10'-0"
542.67

4/19 SECTION THRU STEEL TUBE
1"=1'-0"

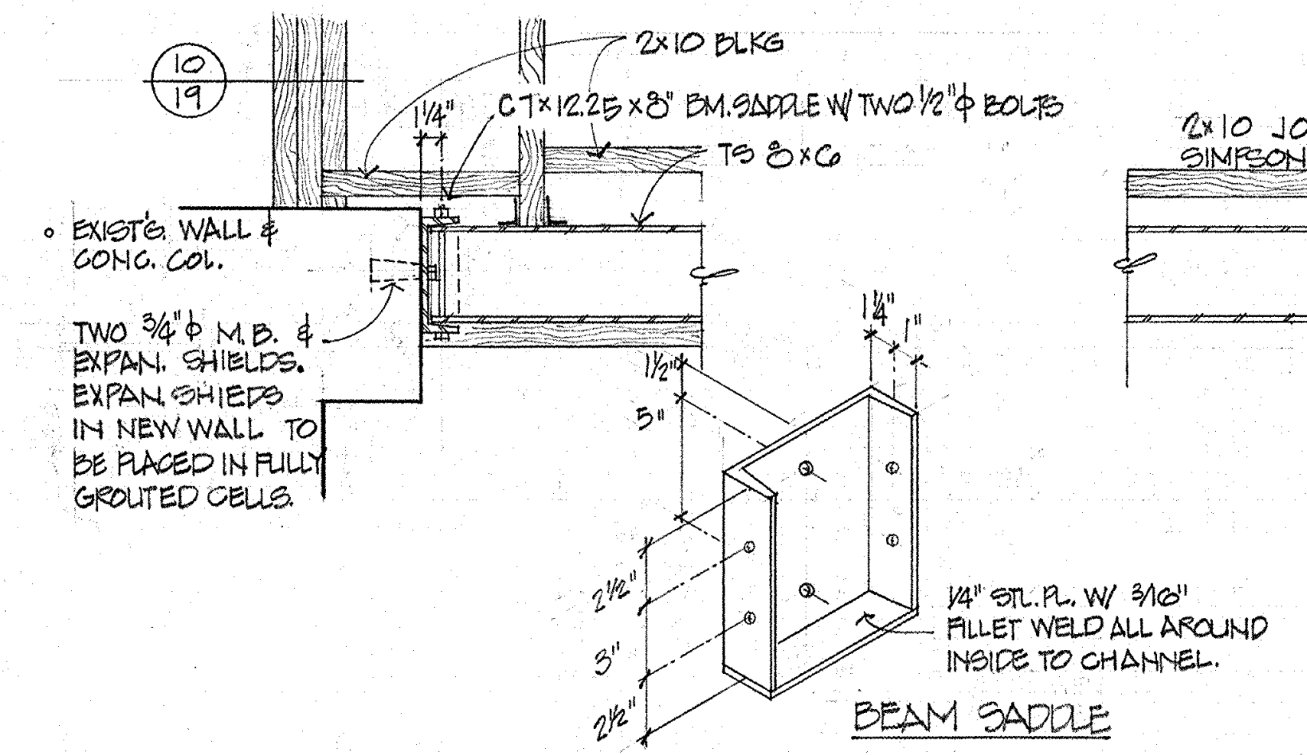
2x10 BLKG.
C7x12.25 x 8" BM. SADDLE W/ TWO 1/2" Φ BOLTS TO 8x6
EXIST'G WALL & CONC. COL.
TWO 3/4" Φ M.B. & EXPAN. SHIELDS. EXPAN. SHIELDS IN NEW WALL TO BE PLACED IN FULLY GROUTED CELLS.
1/4" STL. PL. W/ 3/16" FILLET WELD ALL AROUND INSIDE TO CHANNEL.
BEAM SADDLE

5/19 TYPICAL STEEL TUBE CONNECTION
1"=1'-0"

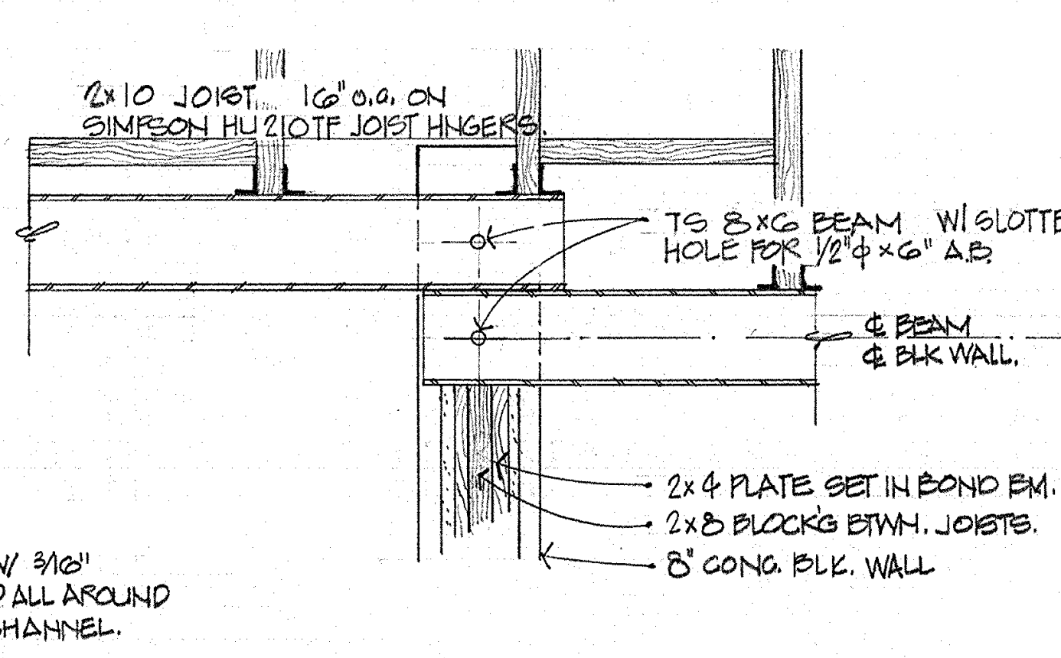
2x10 JOIST 16" o.c. ON SIMPSON HU210TF JOIST HANGERS
TS 8x6 BEAM W/ SLOTTED HOLE FOR 1/2" Φ x 6" A.B.
℄ BEAM & BLK. WALL
2x4 PLATE SET IN BOND BM.
2x8 BLOCKS BTWN. JOISTS.
8" CONC. BLK. WALL

6/19 STEEL TUBE FRAMING
1"=1'-0"

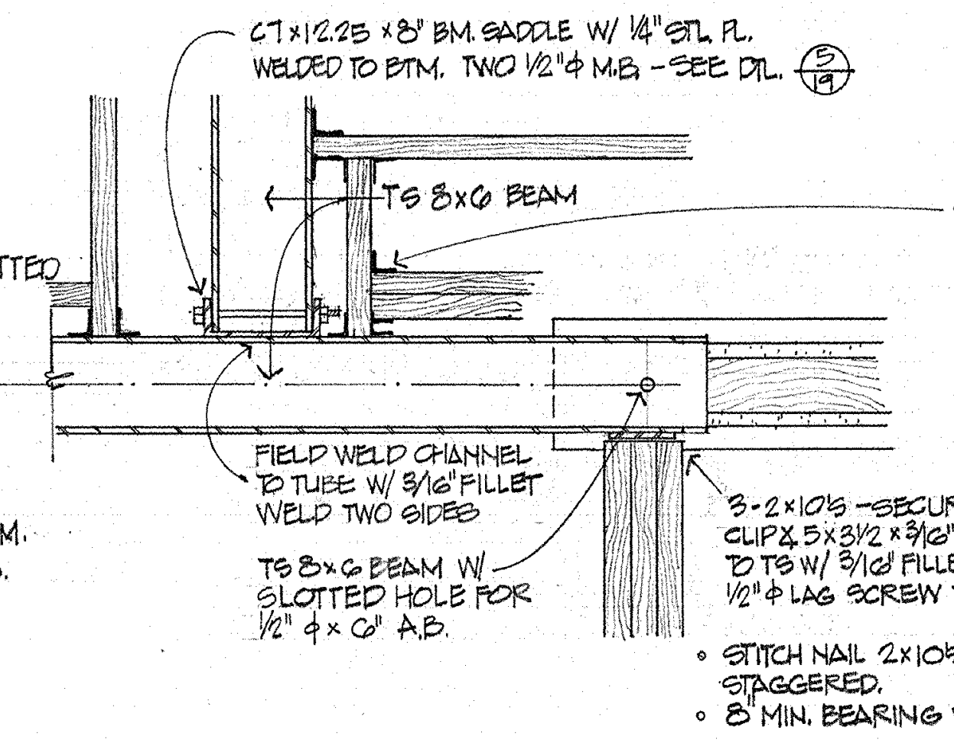
C7x12.25 x 8" BM. SADDLE W/ 1/4" STL. PL. WELDED TO BTM. TWO 1/2" Φ M.B. - SEE DTL.
TS 8x6 BEAM
SIMP. HU 210-2TF HANGER BOTH ENDS OF DBL. JOIST UNDER STUD WALL.
FIELD WELD CHANNEL TO TUBE W/ 3/16" FILLET WELD TWO SIDES
TS 8x6 BEAM W/ SLOTTED HOLE FOR 1/2" Φ x 6" A.B.
3-2x10's "SECURE TO TS W/ CLIP 5x3 1/2 x 5/16" x 4" WIDE WELDED TO TS W/ 3/16" FILLET 3 SIDES & 1/2" Φ LAG SCREW TO 2x10 HDR.
STITCH NAIL 2x10's W/ 16d @ 12" o.c. STAGGERED.
8" MIN. BEARING WEST END.

7/19 STEEL TUBE FRAMING
1"=1'-0"

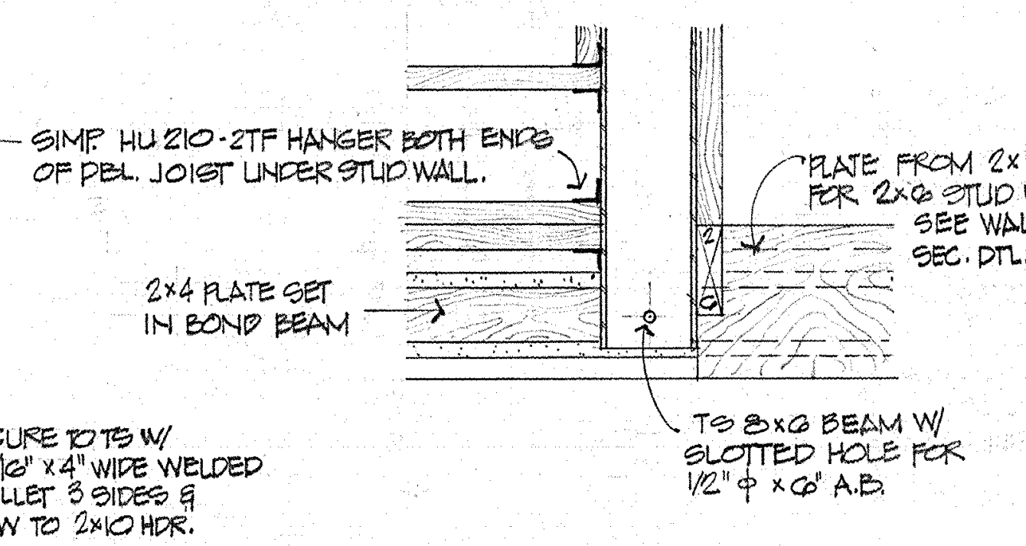
PLATE FROM 2x10 FOR 2x6 STUD WALL SEE WALL SEC. DTL.
2x4 PLATE SET IN BOND BEAM
TS 8x6 BEAM W/ SLOTTED HOLE FOR 1/2" Φ x 6" A.B.

8/19 STEEL TUBE FRAMING
1"=1'-0"

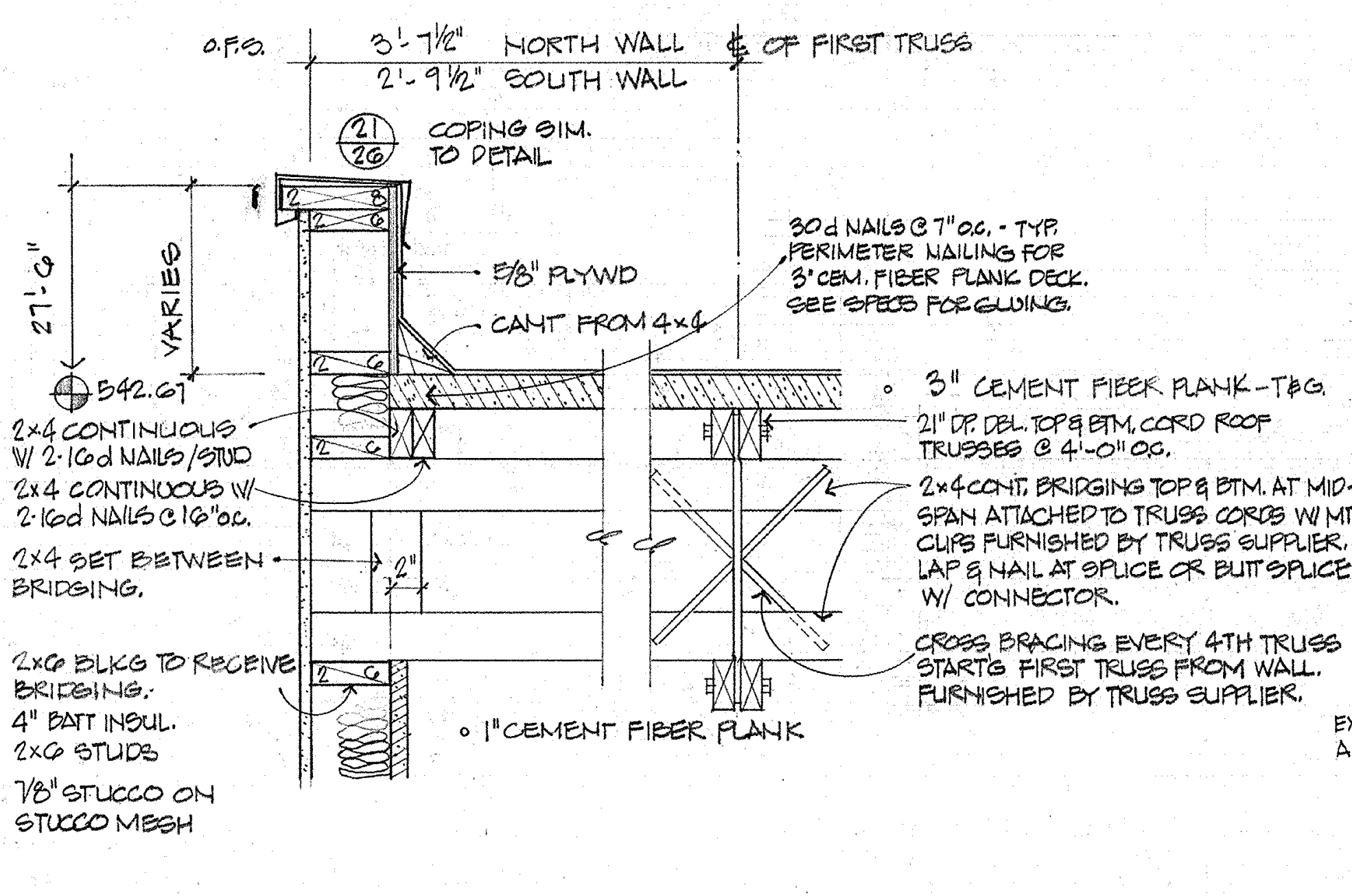
3'-7 1/2" NORTH WALL
2'-9 1/2" SOUTH WALL
℄ OF FIRST TRUSS
COPING SIM. TO DETAIL
5/8" PLYWD
CANT FROM 4x4
30d NAILS @ 7" o.c. - TYP. PERIMETER NAILING FOR 3" CEM. FIBER PLANK DECK. SEE SPECS FOR GLUING.
3" CEMENT FIBER PLANK - T&G
21" DP. DBL. TOP & BTM. CORD ROOF TRUSSES @ 4'-0" o.c.
2x4 CONT. BRIDGING TOP & BTM. AT MID-SPAN ATTACHED TO TRUSS CORDS W/ MTL. CLIPS FURNISHED BY TRUSS SUPPLIER. LAP & NAIL AT SPLICE OR BUTT SPLICE W/ CONNECTOR.
CROSS BRACING EVERY 4TH TRUSS STARTS FIRST TRUSS FROM WALL. FURNISHED BY TRUSS SUPPLIER.
2x4 CONTINUOUS W/ 2-16d NAILS/STUD
2x4 CONTINUOUS W/ 2-16d NAILS @ 16" o.c.
2x4 SET BETWEEN BRIDGING.
2x6 BLKG. TO RECEIVE BRIDGING.
4" BATT INSUL.
2x6 STUDS
7/8" STUCCO ON STUCCO MESH
1" CEMENT FIBER PLANK
27'-0"
VARIES
542.67

9/19 NORTH/SOUTH PARAPET GYM ROOF
1"=1'-0"

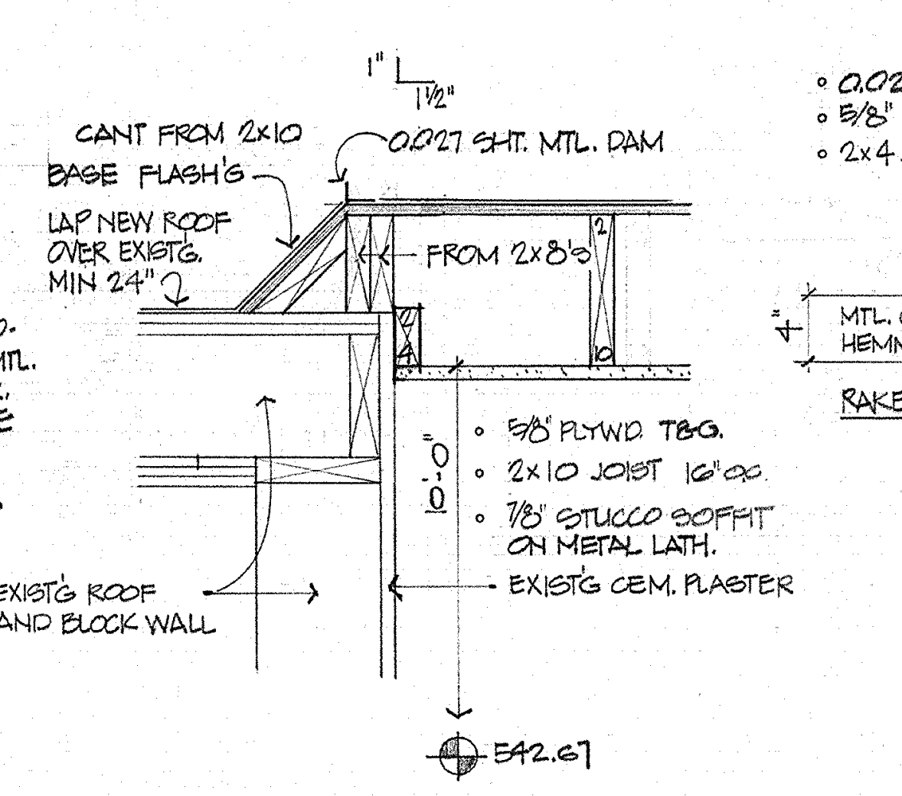
CANT FROM 2x10 BASE FLASH'G
LAP NEW ROOF OVER EXIST'G. MIN. 24"
0.027 SHT. MTL. DAM
FROM 2x8's
5/8" PLYWD. T&G
2x10 JOIST 16" o.c.
7/8" STUCCO SOFFIT ON METAL LATH.
EXIST'G CEM. PLASTER
EXIST'G ROOF AND BLOCK WALL
10'-0"
542.67

10/19 LOWER ROOF CONN. TO EXIST'G FLAT ROOF
1"=1'-0"

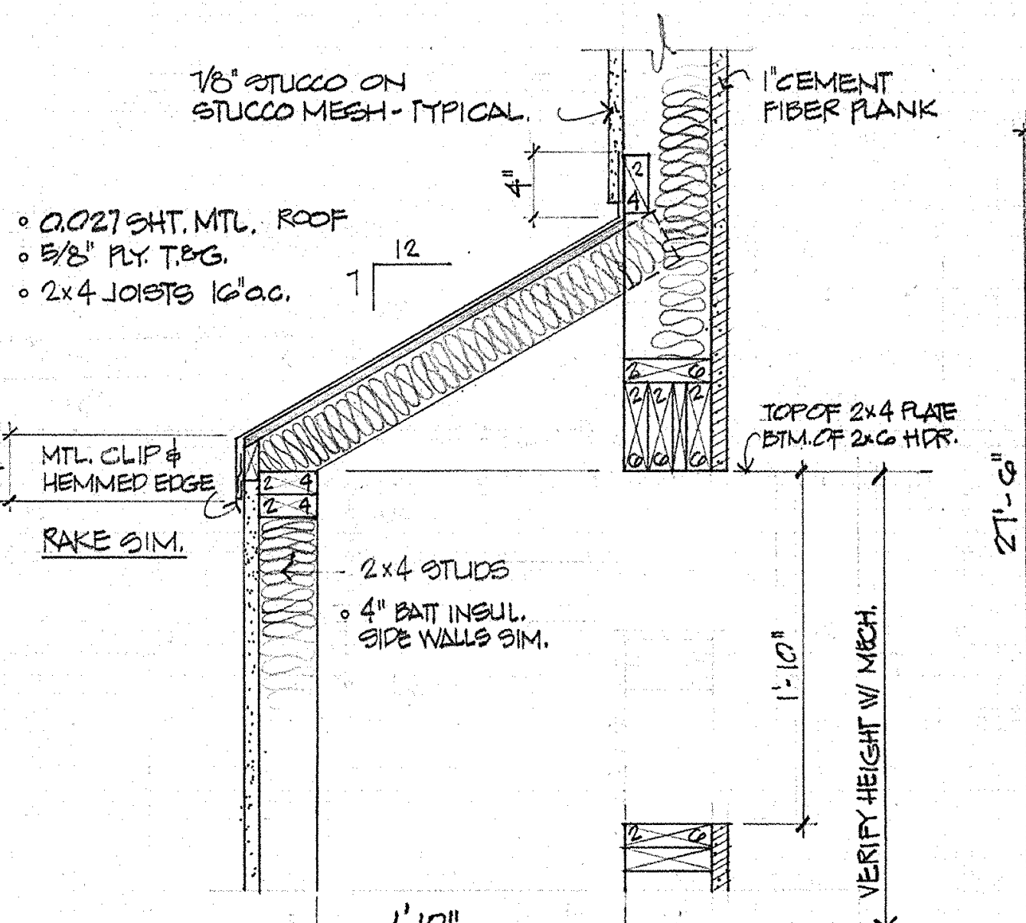
7/8" STUCCO ON STUCCO MESH - TYPICAL
1" CEMENT FIBER PLANK
0.027 SHT. MTL. ROOF
5/8" PLY. T&G
2x4 JOISTS 16" o.c.
MTL. CLIP & HEMMED EDGE
RAKE SIM.
2x4 STUDS
4" BATT INSUL. SIDE WALLS SIM.
TOP OF 2x4 PLATE BELOW 2x6 HDR.
1'-10"
VERIFY HEIGHT W/ MECH.

11/19 ROOFING DETAIL @ MECHANICAL CHASE
1"=1'-0"

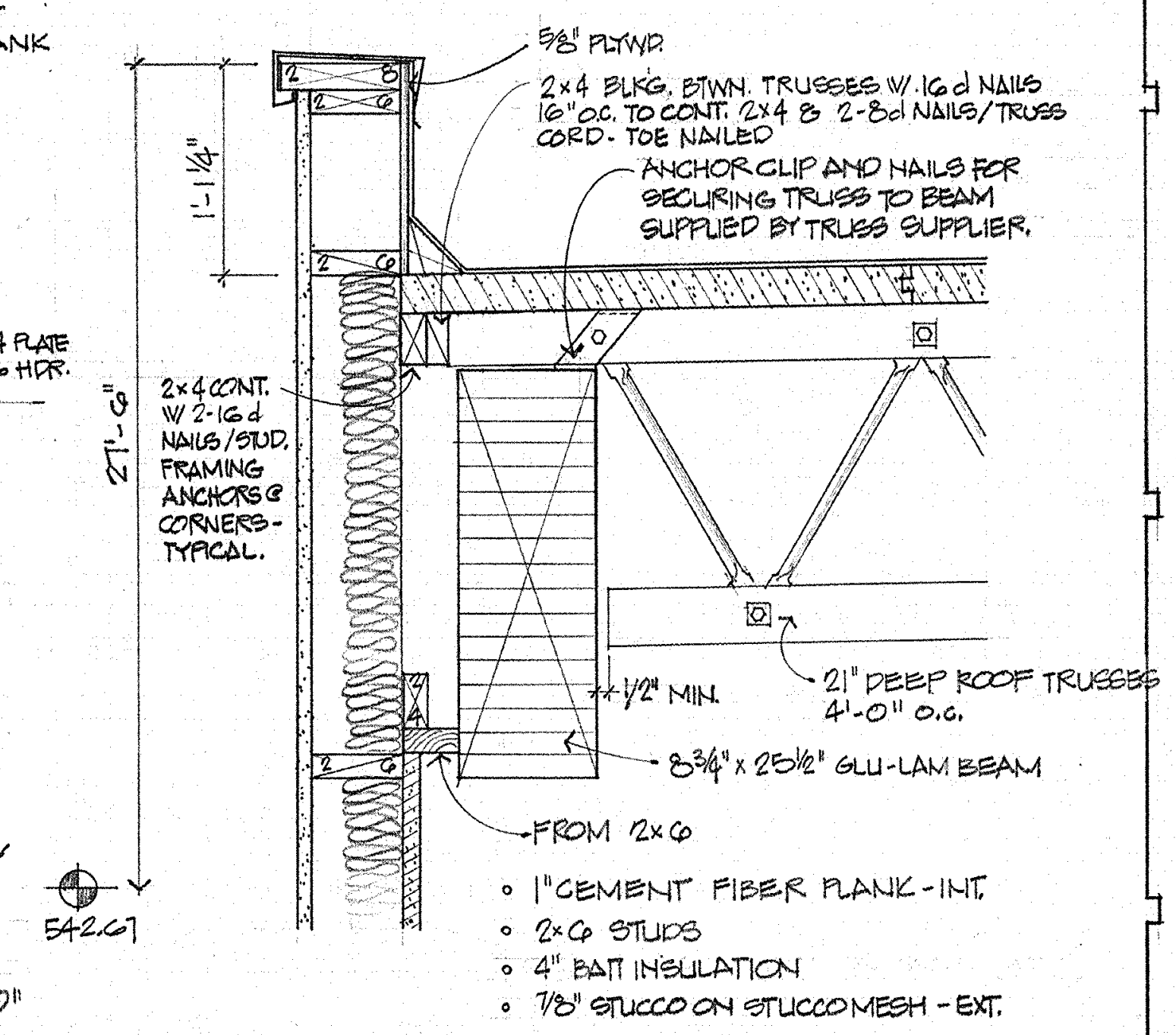
5/8" PLYWD
2x4 BLKG. BTWN. TRUSSES W/ 16d NAILS 16" o.c. TO CONT. 2x4 & 2-8d NAILS/TRUSS CORD - TOE NAILED
ANCHOR CLIP AND NAILS FOR SECURING TRUSS TO BEAM SUPPLIED BY TRUSS SUPPLIER.
2x4 CONT. W/ 2-16d NAILS/STUD. FRAMING ANCHORS @ CORNERS - TYPICAL.
21" DEEP ROOF TRUSSES 4'-0" o.c.
1/2" MIN.
8 3/4" x 25 1/2" GLU-LAM BEAM
FROM 2x6
1" CEMENT FIBER PLANK - INT.
2x6 STUDS
4" BATT INSULATION
7/8" STUCCO ON STUCCO MESH - EXT.
27'-0"
542.67

12/19 EAST/WEST PARAPET GYM ROOF
1"=1'-0"

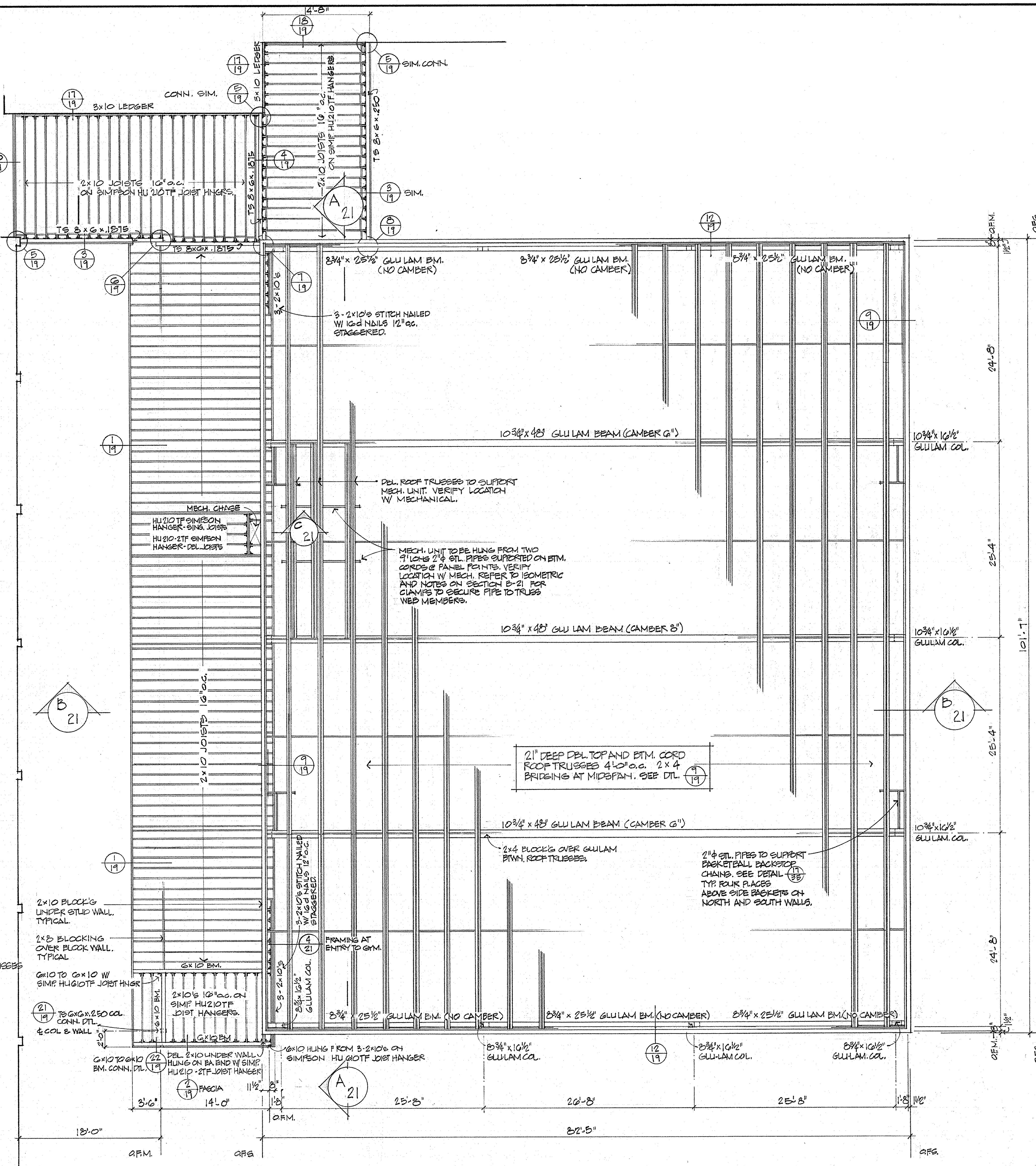
14'-8"
3x10 LEDGER
CONN. SIM.
2x10 LEDGER
2x10 JOISTS 16" o.c. ON SIMP. HU210TF HANGERS
TS 8x6x.1875
2x10 JOISTS 16" o.c. ON SIMPSON HU 210TF JOIST HANGERS
3-2x10's STITCH NAILED W/ 16d NAILS 12" o.c. STAGGERED.
8 3/4" x 25 1/2" GLU LAM BM. (NO CAMBER)
10 3/4" x 49" GLU LAM BEAM (CAMBER 6")
10 3/4" x 16 1/2" GLU LAM COL.
DBL. ROOF TRUSSES TO SUPPORT MECH. UNIT. VERIFY LOCATION W/ MECHANICAL.
MECH. CHASE
HU210TF SIMPSON HANGER - SING. JOISTS
HU210-2TF SIMPSON HANGER - DBL. JOISTS
MECH. UNIT TO BE HUNG FROM TWO 4" LONG 2" Φ STL. PIPES SUPPORTED ON BTM. CORDS @ PANEL POINTS. VERIFY LOCATION W/ MECH. REFER TO ISOMETRIC AND NOTES ON SECTION B-21 FOR CLAMPS TO SECURE PIPE TO TRUSS WEB MEMBERS.
21" DEEP DBL. TOP AND BTM. CORD ROOF TRUSSES 4'-0" o.c. 2x4 BRIDGING AT MIDSPAN. SEE DTL.
2x10 JOISTS 16" o.c.
2x6 BLOCKS OVER GLU LAM BTWN. ROOF TRUSSES.
2" Φ STL. PIPES TO SUPPORT BASKETBALL BACKSTOP CHANNEL. SEE DETAIL. TYP. FOUR PLACES ABOVE SIDE BASKETS ON NORTH AND SOUTH WALLS.
2x10 BLOCKS UNDER STUD WALL TYPICAL.
2x8 BLOCKING OVER BLOCK WALL TYPICAL.
6x10 TO C6x10 W/ SIMP. HU210TF JOIST HNGR.
FRAMING AT ENTRY TO GYM.
TS 6x6x.250 COL. CONN. DTL.
℄ COL. & WALL
2x10 JOISTS 16" o.c. ON SIMP. HU210TF JOIST HNGR.
6x10 BM.
6x10 HUNG FROM 3-2x10's ON SIMPSON HU 210TF JOIST HANGER
DBL. 2x10 UNDER WALL HUNG ON EA. END W/ SIMP. HU210-2TF JOIST HNGR.
6x10 TO 6x10 BM. CONN.
8 3/4" x 16 1/2" GLU LAM COL.
FASCIA
3'-6"
14'-0"
13'-0"
23'-8"
26'-8"
25'-8"
93'-5"
24'-8"
25'-4"
101'-7"
O.F.M.
O.F.S.

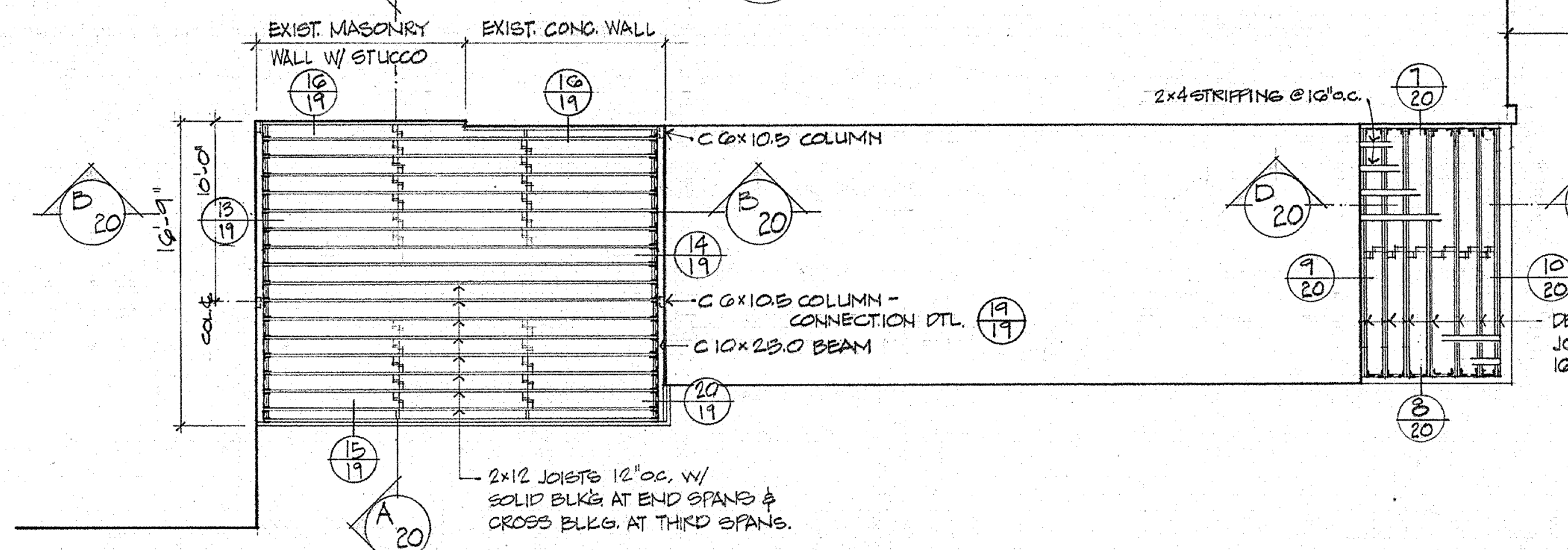
EXIST. MASONRY WALL W/ STUCCO
EXIST. CONC. WALL
C6x10.5 COLUMN
C6x10.5 COLUMN - CONNECTION DTL.
C10x25.0 BEAM
2x12 JOISTS 12" o.c. W/ SOLID BLKG. AT END SPANS & CROSS BLKG. AT THIRD SPANS.
2x4 STRIPPING @ 16" o.c.
DBL. 2x8 JOISTS @ 16" o.c. JOISTS STITCH NAILED W/ 16d NAILS 12" o.c. STAGGERED
16'-4"
10'-0"

ROOF FRAMING PLAN SECTOR D
1/8"=1'-0"

N

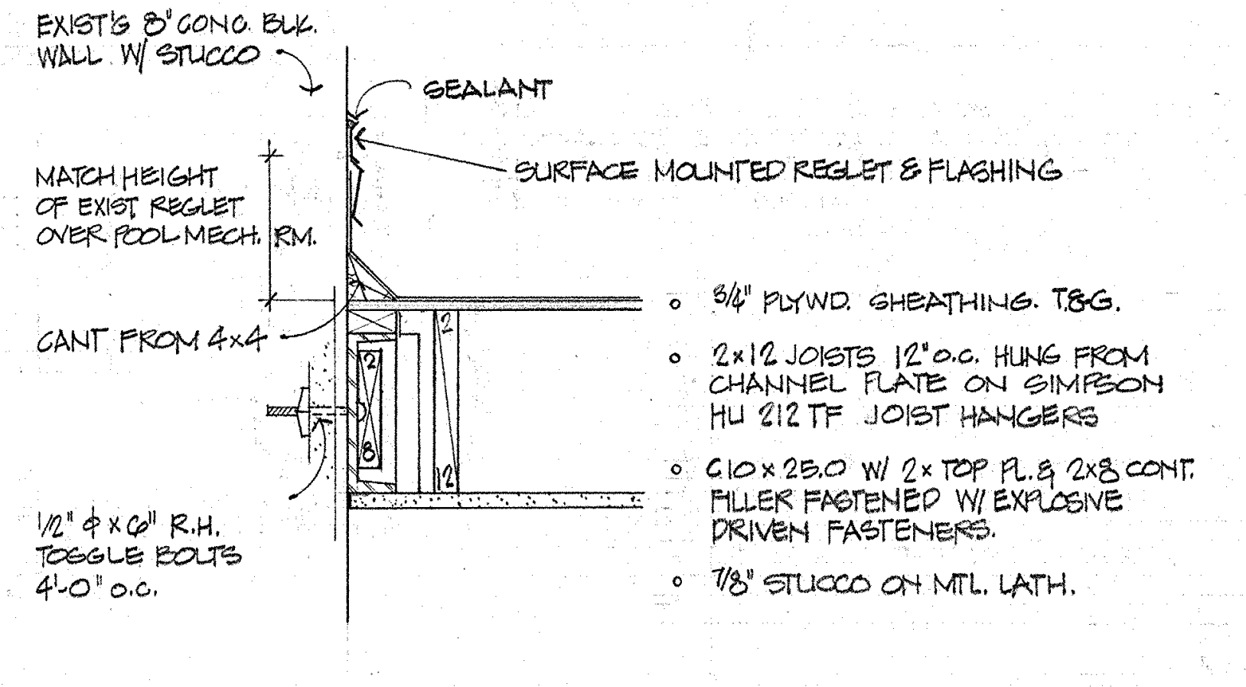
EXIST'G 8" CONC. BLK. WALL W/ STUCCO
SEALANT
SURFACE MOUNTED REGLET & FLASHING
MATCH HEIGHT OF EXIST. REGLET OVER POOL MECH. RM.
CANT FROM 4x4
5/8" PLYWD. SHEATHING T&G.
2x12 JOISTS 12" o.c. HUNG FROM CHANNEL PLATE ON SIMPSON HU 212 TF JOIST HANGERS
C10x25.0 W/ 2x TOP PL. & 2x8 CONT. FILLER FASTENED W/ EXPLOSIVE DRIVEN FASTENERS.
7/8" STUCCO ON MTL. LATH.
1/2" Φ x 6" R.H. TOGGLE BOLTS 4'-0" o.c.

13/19 NORTH CONN. LOADING DOCK ROOF
1"=1'-0"

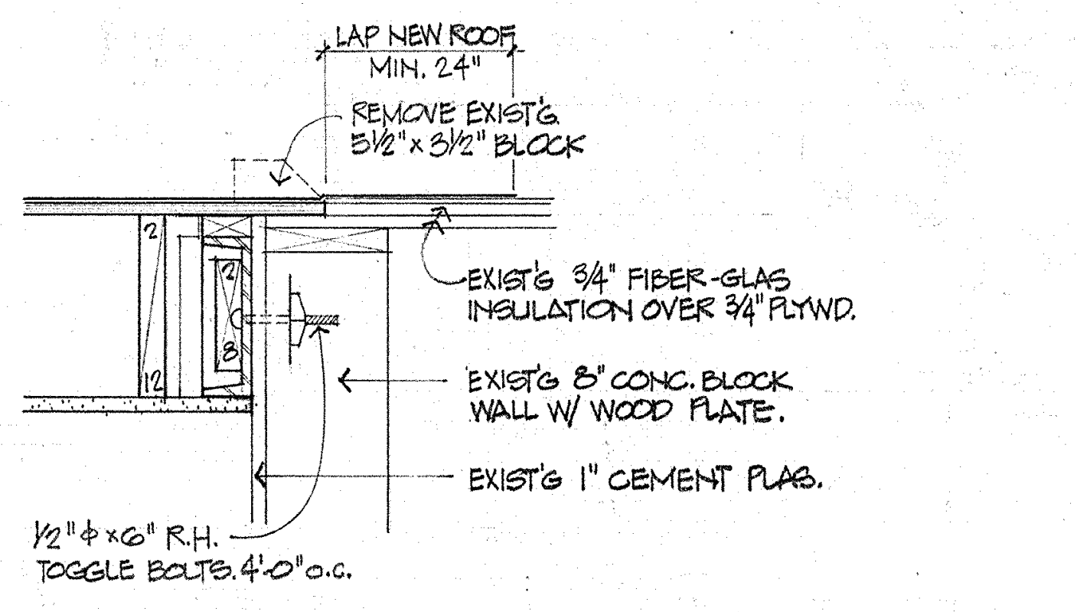
LAP NEW ROOF MIN. 24"
REMOVE EXIST'G 3 1/2" x 3 1/2" BLOCK
EXIST'G 3/4" FIBER-GLAS INSULATION OVER 3/4" PLYWD.
EXIST'G 8" CONC. BLOCK WALL W/ WOOD PLATE.
EXIST'G 1" CEMENT PLAS.
1/2" Φ x 6" R.H. TOGGLE BOLTS 4'-0" o.c.

14/19 SOUTH CONN. LOADING DOCK ROOF
1"=1'-0"

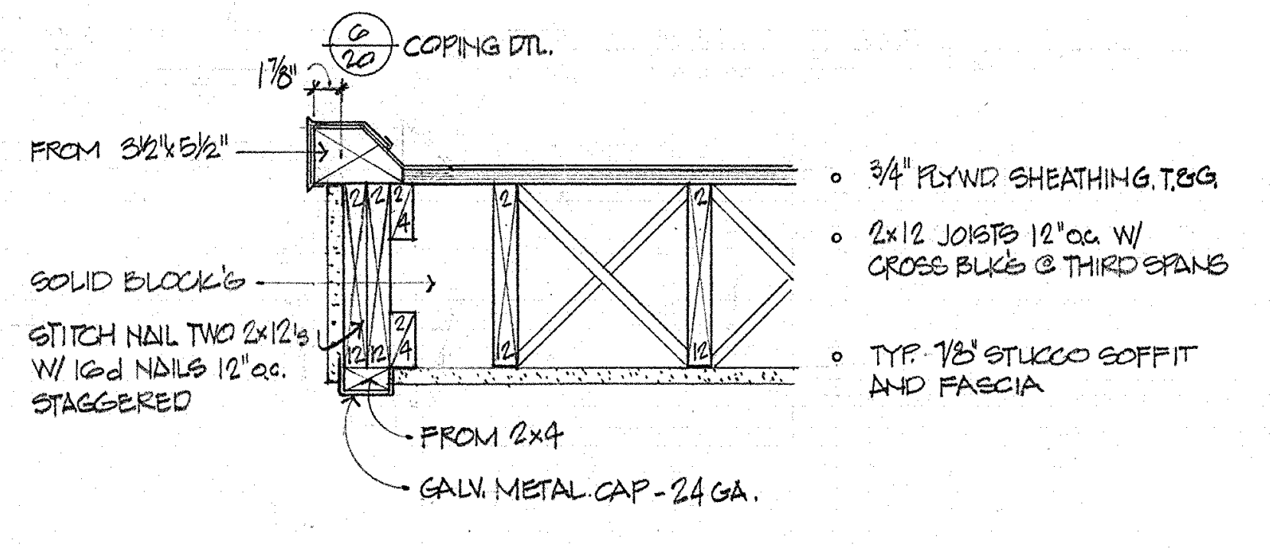
COPING DTL.
FROM 3 1/2" x 5 1/2"
5/8" PLYWD. SHEATHING T&G
2x12 JOISTS 12" o.c. W/ CROSS BLKG. @ THIRD SPANS
SOLID BLOCKING STITCH NAIL TWO 2x12's W/ 16d NAILS 12" o.c. STAGGERED
TYP. 7/8" STUCCO SOFFIT AND FASCIA
FROM 2x4
GALV. METAL CAP - 24 GA.

15/19 WEST FASCIA LOADING DOCK ROOF
1"=1'-0"

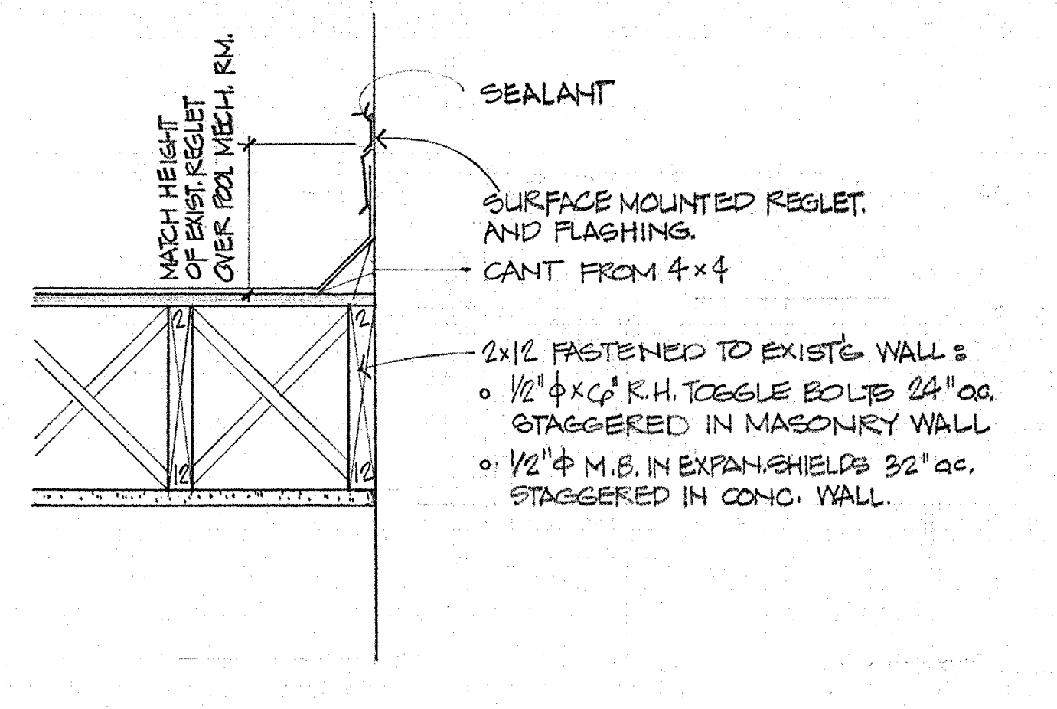
SEALANT
MATCH HEIGHT OF EXIST. REGLET OVER POOL MECH. RM.
SURFACE MOUNTED REGLET AND FLASHING.
CANT FROM 4x4
2x12 FASTENED TO EXIST'G WALL: 1/2" Φ x 6" R.H. TOGGLE BOLTS 24" o.c. STAGGERED IN MASONRY WALL
1/2" Φ M.S. IN EXPAN. SHIELDS 32" o.c. STAGGERED IN CONC. WALL.

16/19 EAST CONN. LOADING DOCK ROOF
1"=1'-0"

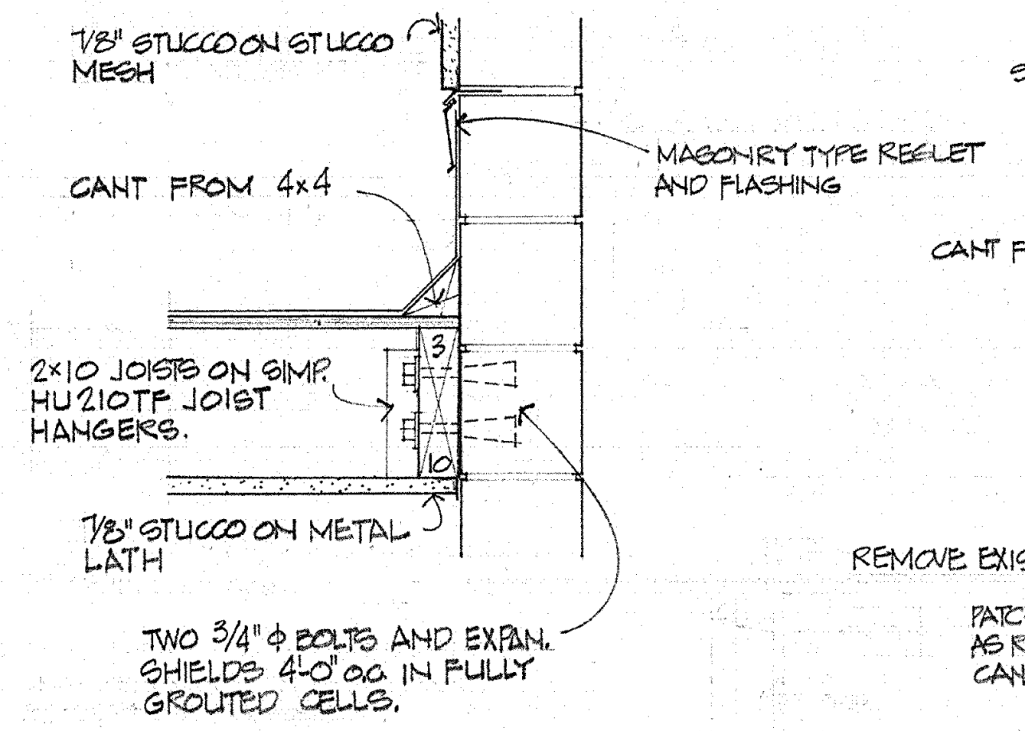
7/8" STUCCO ON STUCCO MESH
MASONRY TYPE REGLET AND FLASHING
CANT FROM 4x4
2x10 JOISTS ON SIMP. HU210TF JOIST HANGERS.
7/8" STUCCO ON METAL LATH
TWO 3/4" Φ BOLTS AND EXPAN. SHIELDS 4'-0" o.c. IN FULLY GROUTED CELLS.

17/19 LEDGER @ NEW BLOCK WALL - LOWER ROOF
1"=1'-0"

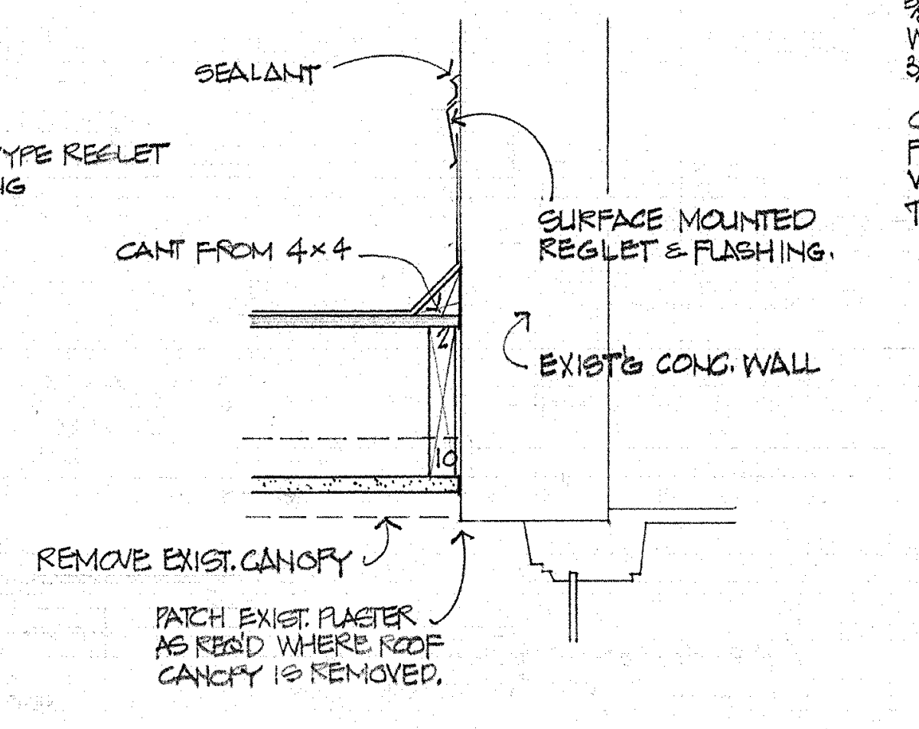
SEALANT
SURFACE MOUNTED REGLET & FLASHING.
CANT FROM 4x4
EXIST'G CONC. WALL
REMOVE EXIST. CANOPY
PATCH EXIST. PLASTER AS REQ'D WHERE ROOF CANOPY IS REMOVED.

18/19 FLASHING @ EXIST'G CONC. WALL - LOWER ROOF
1"=1'-0"

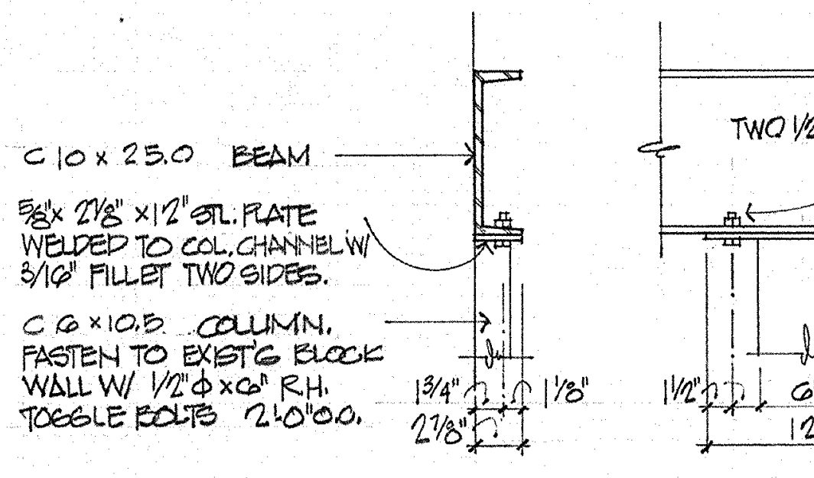
C10x25.0 BEAM
5/8" x 2 1/8" x 12" STL. PLATE WELDED TO COL. CHANNEL W/ 3/16" FILLET TWO SIDES.
C6x10.5 COLUMN. FASTEN TO EXIST'G BLOCK WALL W/ 1/2" Φ x 6" R.H. TOGGLE BOLTS 2'-0" o.c.
TWO 1/2" Φ M.B.

19/19 BEAM TO COLUMN CONNECTION LOADING DOCK ROOF
1"=1'-0"

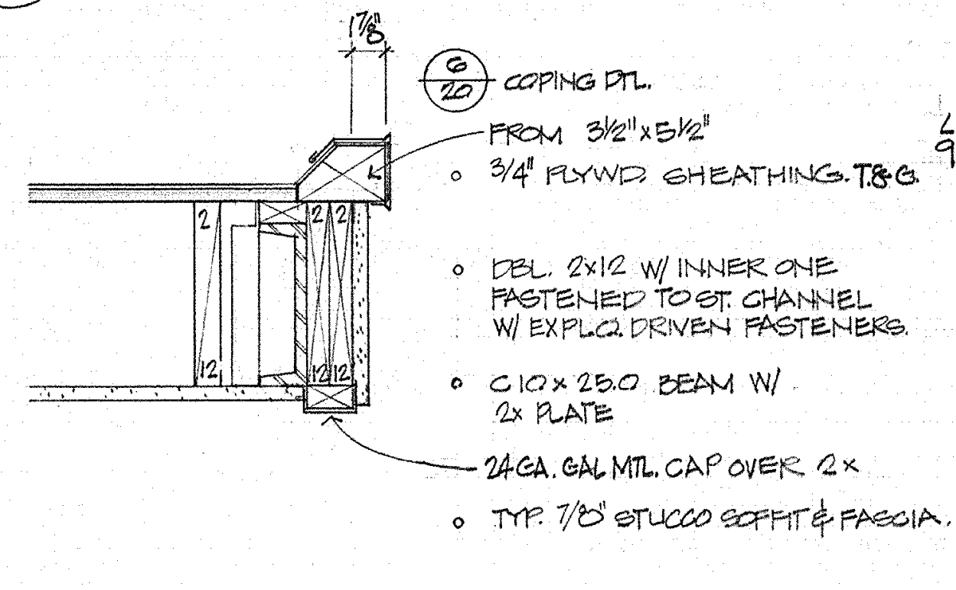
COPING DTL.
FROM 3 1/2" x 5 1/2"
3/4" PLYWD. SHEATHING T&G
DBL. 2x12 W/ INNER ONE FASTENED TO C CHANNEL W/ EXPLO. DRIVEN FASTENERS.
C10x25.0 BEAM W/ 2x PLATE
24 GA. GAL. MTL. CAP OVER 2x
TYP. 7/8" STUCCO SOFFIT & FASCIA.

20/19 SOUTH FASCIA LOADING DOCK ROOF
1"=1'-0"

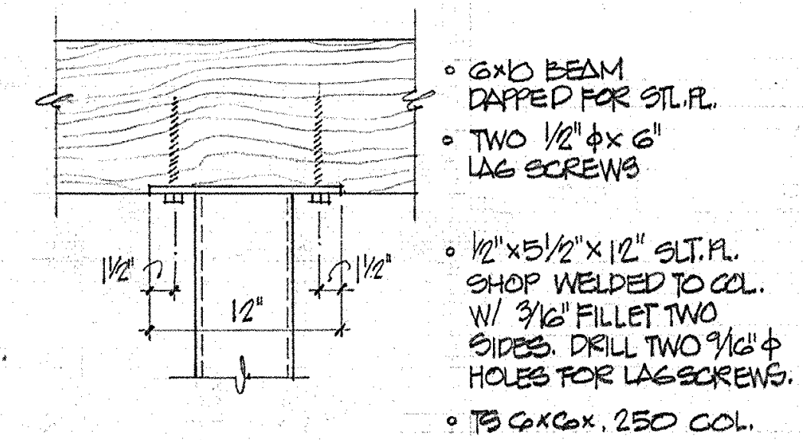
6x10 BEAM DAPPED FOR STL. PL.
TWO 1/2" Φ x 6" LAG SCREWS
1/2" x 3 1/2" x 12" STL. PL. SHOP WELDED TO COL. W/ 3/16" FILLET TWO SIDES. DRILL TWO 3/8" Φ HOLES FOR LAG SCREWS.
TS 6x6x.250 COL.

21/19 BEAM TO COL. CONNECTION WEST GYM ENTRY
1"=1'-0"

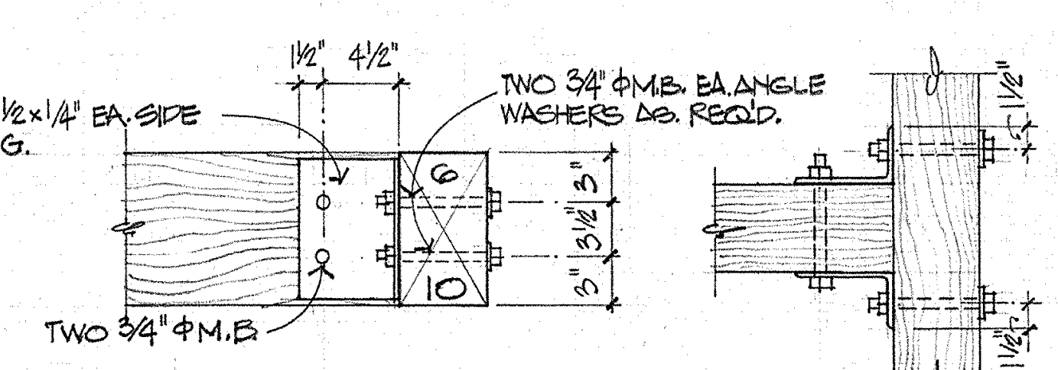
L 6x3 1/2 x 1/4" EA. SIDE 9" LONG.
TWO 3/4" Φ M.B. EA. ANGLE WASHERS AS REQ'D.
TWO 3/4" Φ M.B.

22/19 BEAM TO BEAM CONN. WEST GYM ENTRY
1"=1'-0"

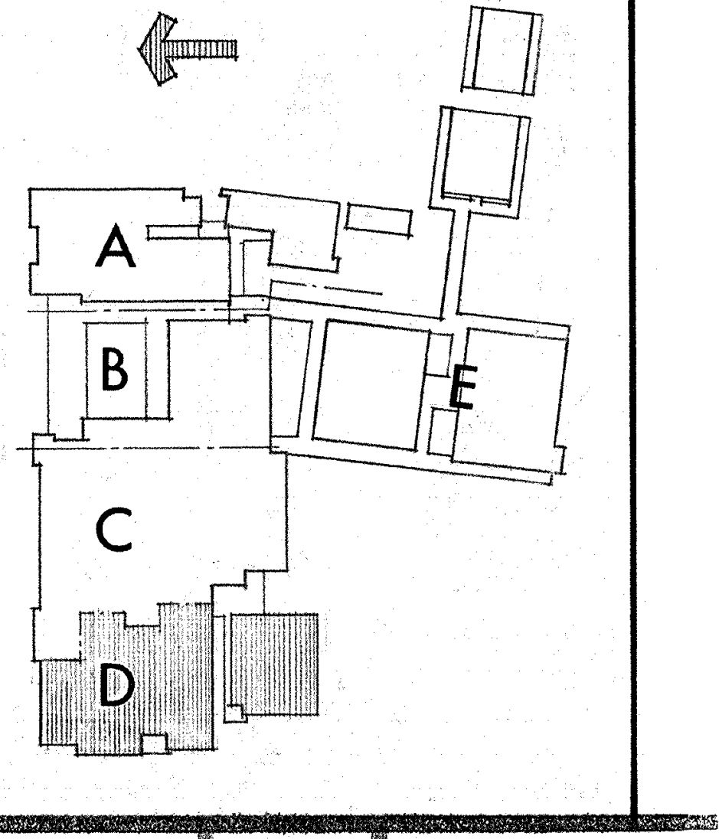

ROOF FRAMING PLAN, DETAILS - SECTOR D

SWEET HOME HIGH SCHOOL
ADDITIONS AND ALTERATIONS 1974
DISTRICT 55 LINN COUNTY, OREGON

ARCHITECTS
HAMLIN, MARTIN,
SCHULTZ & GEYER
AIA
159 W. 12TH EUGENE, OREGON 97401

A
19
JOB NO.

REGISTERED ARCHITECT
CLARE K. HAMLIN
Clare K Hamlin
EUGENE, OREGON
STATE OF OREGON

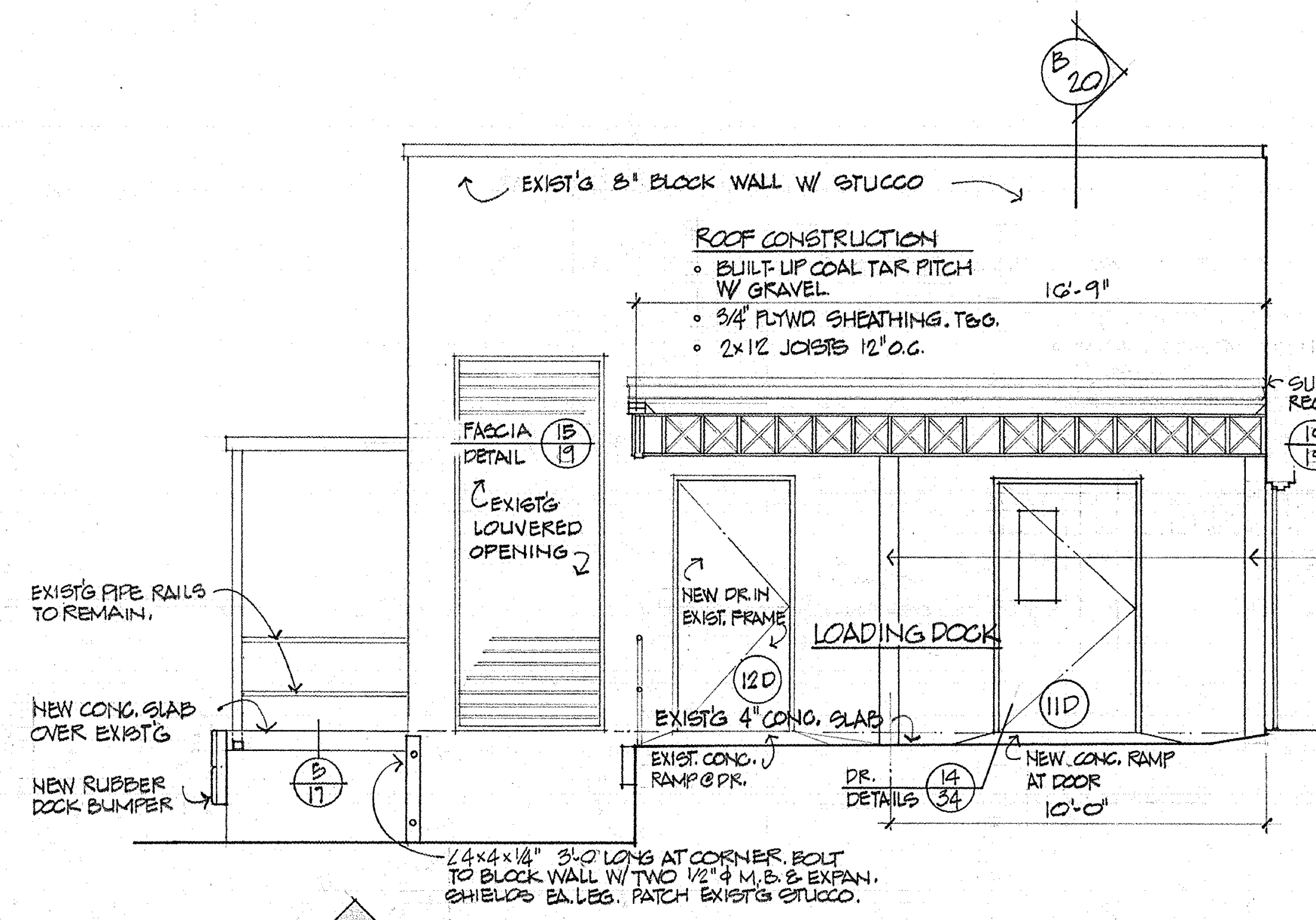
B 20
EXIST'G 8" BLOCK WALL W/ STUCCO
ROOF CONSTRUCTION
∘ BUILT-UP COAL TAR PITCH W/ GRAVEL
∘ 3/4" PLYWD. SHEATHING. T&G.
∘ 2×12 JOISTS 12" o.c.
16'-9"
SURFACE MOUNTED REGLET & FLASHING
FASCIA DETAIL 15/19
16/19 ROOF CONN. @ EXIST'G WALL
19/19 BM. TO COL CONN.
EXIST'G LOUVERED OPENING
C 6×10.5 COLUMN. FASTEN TO WALL W/ 1/2"φ×6" R.H. TOGGLE BOLTS 2'-0" o.c.
EXIST'G PIPE RAILS TO REMAIN.
NEW DR. IN EXIST. FRAME
LOADING DOCK
12D
11D
NEW CONC. SLAB OVER EXIST'G
EXIST'G 4" CONC. SLAB
17/17 COL. BASE DETAIL
NEW RUBBER DOCK BUMPER
5/17
EXIST. CONC. RAMP @ DR.
DR. DETAILS 14/34
NEW CONC. RAMP AT DOOR
10'-0"
∠4×4×1/4" 3'-0" LONG AT CORNER. BOLT TO BLOCK WALL W/ TWO 1/2"φ M.B. & EXPAN. SHIELDS EA. LEG. PATCH EXIST'G STUCCO.

A/20 SECTION LOOKING NORTH THRU LOADING DOCK ROOF 1/4"=1'-0"

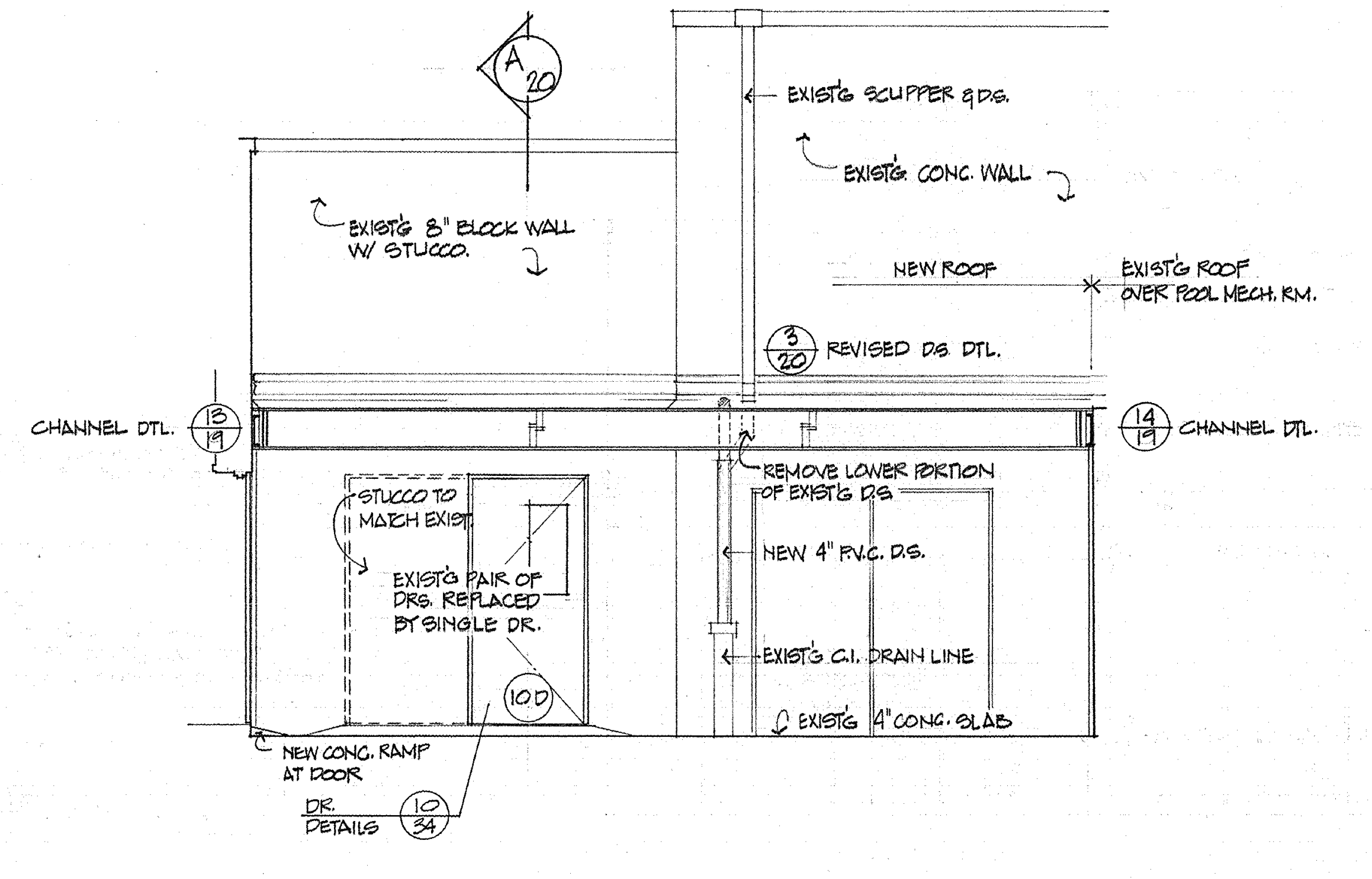
A 20
EXIST'G SCUPPER & D.S.
EXIST'G CONC. WALL
EXIST'G 8" BLOCK WALL W/ STUCCO.
NEW ROOF
EXIST'G ROOF OVER POOL MECH. RM.
3/20 REVISED D.S. DTL.
CHANNEL DTL. 13/19
14/19 CHANNEL DTL.
REMOVE LOWER PORTION OF EXIST'G D.S.
STUCCO TO MATCH EXIST.
EXIST'G PAIR OF DRS. REPLACED BY SINGLE DR.
NEW 4" P.V.C. D.S.
EXIST'G C.I. DRAIN LINE
10D
EXIST'G 4" CONC. SLAB
NEW CONC. RAMP AT DOOR
DR. DETAILS 10/34

B/20 SECTION LOOKING EAST THRU LOADING DOCK ROOF 1/4"=1'-0"

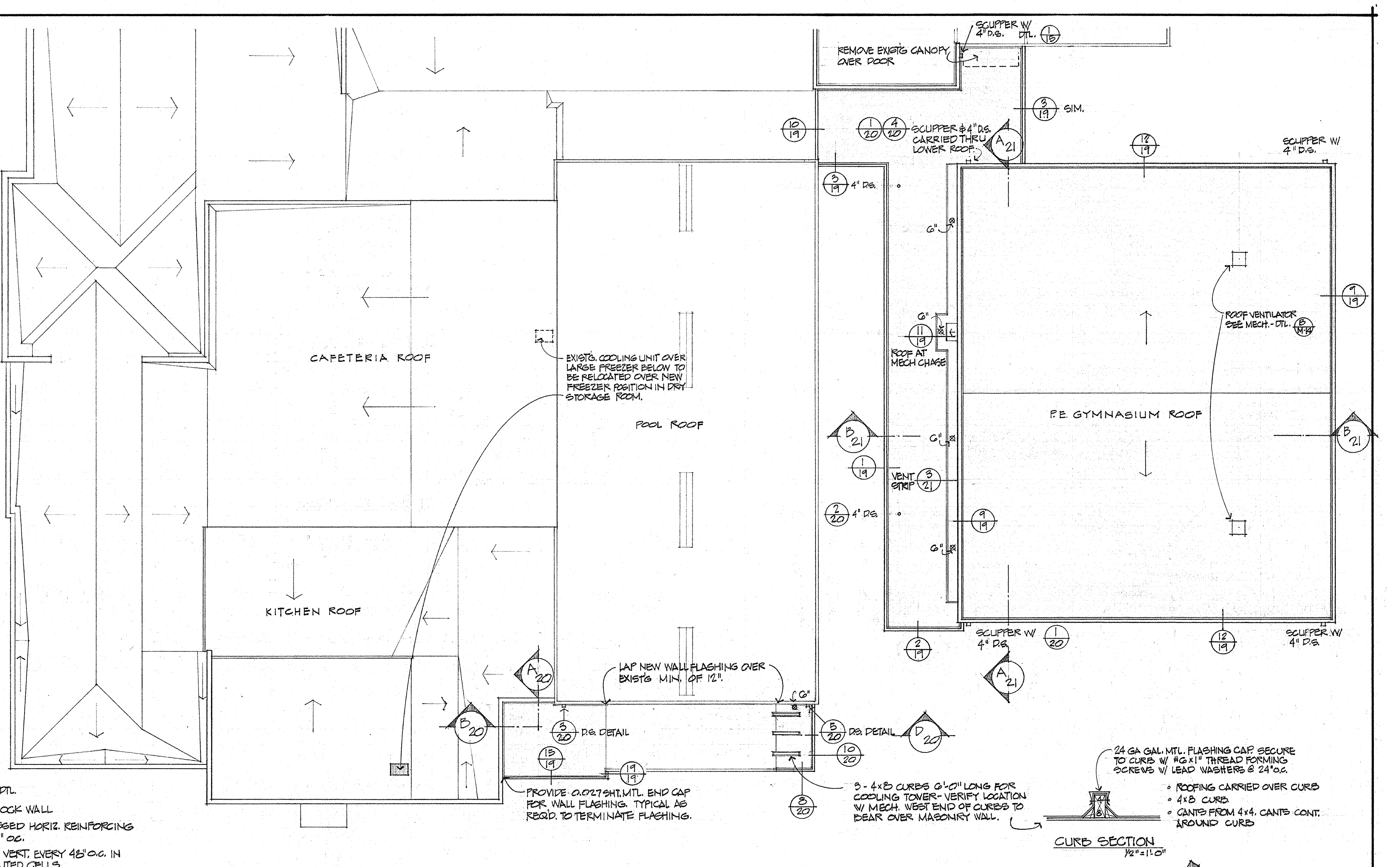
SCUPPER W/ 4" D.S. DTL. 1/15
REMOVE EXIST'G CANOPY OVER DOOR
3/19 SIM.
10/19
1/20 4/20 SCUPPER & 4" D.S. CARRIED THRU LOWER ROOF.
A 21
SCUPPER W/ 4" D.S.
12/19
3/19 4" D.S.
6"
CAFETERIA ROOF
EXIST'G. COOLING UNIT OVER LARGE FREEZER BELOW TO BE RELOCATED OVER NEW FREEZER POSITION IN DRY STORAGE ROOM.
POOL ROOF
11/19
ROOF AT MECH CHASE
ROOF VENTILATOR SEE MECH.-DTL. B/M-14
9/19
P.E. GYMNASIUM ROOF
B 21
1/19
VENT STRIP 3/21
2/20 4" D.S.
9/19
KITCHEN ROOF
2/19
SCUPPER W/ 4" D.S. 1/20
12/19
SCUPPER W/ 4" D.S.
A 21
A 20
LAP NEW WALL FLASHING OVER EXIST'G MIN. OF 12".
B 20
3/20 D.S. DETAIL
5/20 D.S. DETAIL
D 20
15/19
19/19
10/20
8/20
PROVIDE 0.027 SHT. MTL. END CAP FOR WALL FLASHING. TYPICAL AS REQ'D. TO TERMINATE FLASHING.
3 - 4×8 CURBS 6'-0" LONG FOR COOLING TOWER - VERIFY LOCATION W/ MECH. WEST END OF CURBS TO BEAR OVER MASONRY WALL.
24 GA GAL. MTL. FLASHING CAP. SECURE TO CURB W/ #6×1" THREAD FORMING SCREWS W/ LEAD WASHERS @ 24" o.c.
∘ ROOFING CARRIED OVER CURB
∘ 4×8 CURB.
∘ CANTS FROM 4×4. CANTS CONT. AROUND CURB
CURB SECTION
1/2"=1'-0"
N

ROOF PLAN
SECTOR D
1/16"=1'-0"

⊗ ROOF EXHAUSTER
⊙ ROOF JACK

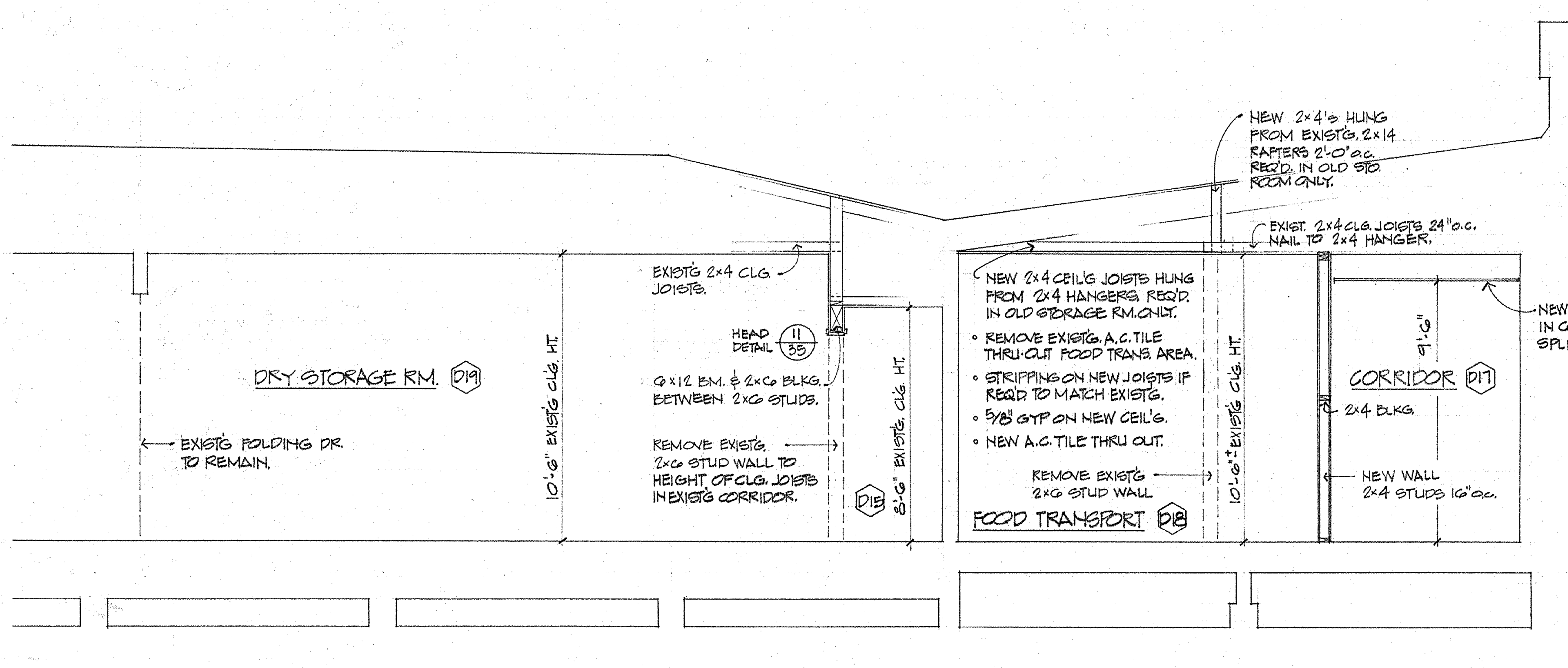
NEW 2×4's HUNG FROM EXIST'G. 2×14 RAFTERS 2'-0" o.c. REQ'D. IN OLD STO. ROOM ONLY.
EXIST. 2×4 CLG. JOISTS 24" o.c. NAIL TO 2×4 HANGER.
EXIST'G 2×4 CLG. JOISTS.
HEAD DETAIL 11/35
6×12 BM. & 2×6 BLKG. BETWEEN 2×6 STUDS.
REMOVE EXIST'G. 2×6 STUD WALL TO HEIGHT OF CLG. JOISTS IN EXIST'G CORRIDOR.
DRY STORAGE RM. D19
EXIST'G FOLDING DR. TO REMAIN.
10'-6" EXIST'G CLG. HT.
8'-6" EXIST'G CLG. HT.
D15
NEW 2×4 CEIL'G JOISTS HUNG FROM 2×4 HANGERS REQ'D. IN OLD STORAGE RM. ONLY.
∘ REMOVE EXIST'G. A.C. TILE THRU-OUT FOOD TRANS. AREA.
∘ STRIPPING ON NEW JOISTS IF REQ'D. TO MATCH EXIST'G.
∘ 5/8" GYP ON NEW CEIL'G.
∘ NEW A.C. TILE THRU OUT.
REMOVE EXIST'G 2×6 STUD WALL
FOOD TRANSPORT D18
10'-6"± EXIST'G CLG. HT.
NEW A.C. TILE CLG. IN CONCEALED ZEE SPLINE SUS. SYSTEM.
9'-6"
CORRIDOR D17
2×4 BLKG.
NEW WALL 2×4 STUDS 16" o.c.

C/20 SECTION LOOKING EAST THRU DRY STORAGE RM., WORK RM. 1/4"=1'-0"

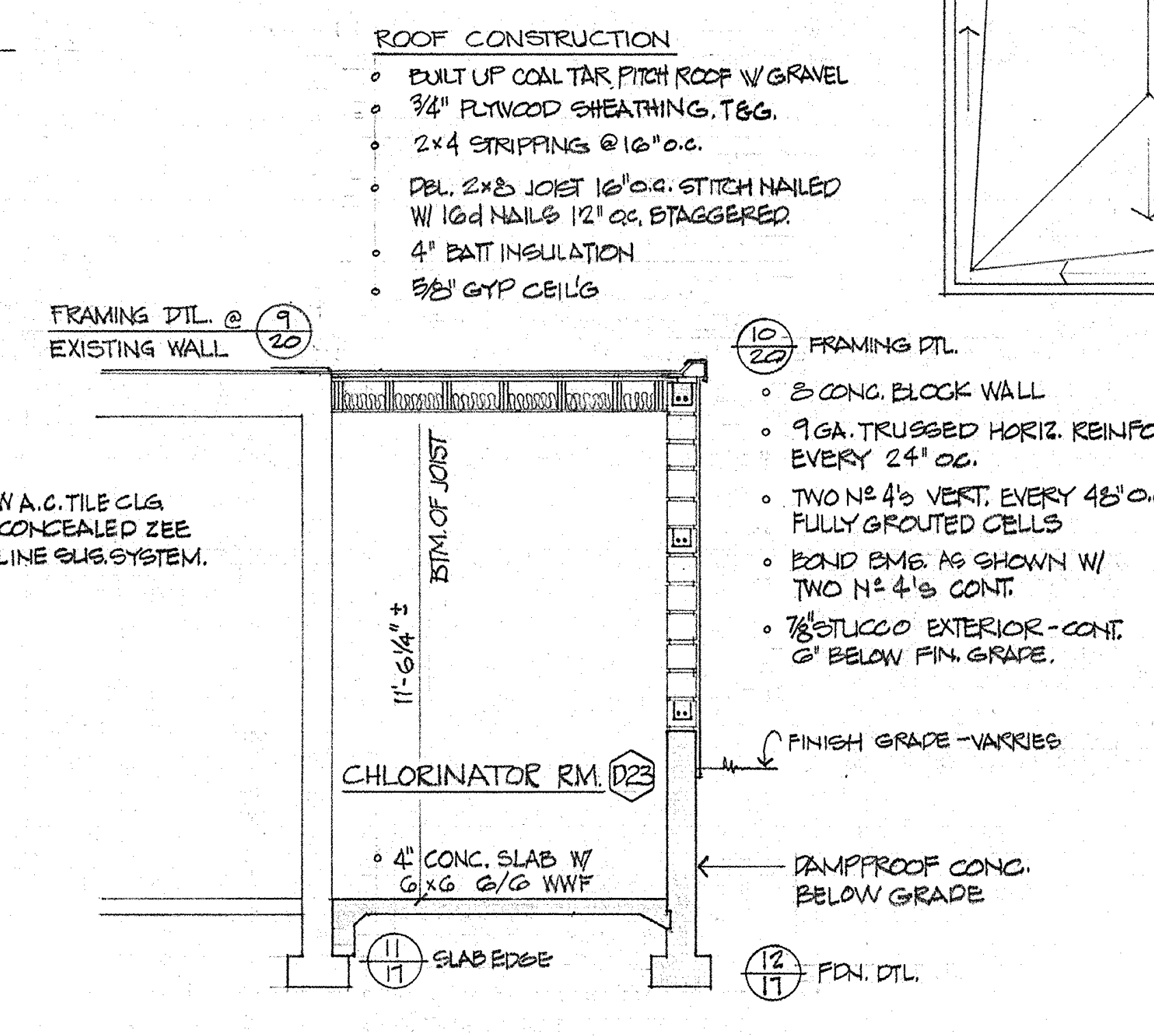
ROOF CONSTRUCTION
∘ BUILT UP COAL TAR PITCH ROOF W/ GRAVEL
∘ 3/4" PLYWOOD SHEATHING. T&G.
∘ 2×4 STRIPPING @ 16" o.c.
∘ DBL. 2×8 JOIST 16" o.c. STITCH NAILED W/ 16d NAILS 12" o.c. STAGGERED.
∘ 4" BATT INSULATION
∘ 5/8" GYP CEIL'G
FRAMING DTL. @ EXISTING WALL 9/20
10/20 FRAMING DTL.
∘ 8 CONC. BLOCK WALL
∘ 9 GA. TRUSSED HORIZ. REINFORCING EVERY 24" o.c.
∘ TWO No 4's VERT. EVERY 48" o.c. IN FULLY GROUTED CELLS
∘ BOND BMS. AS SHOWN W/ TWO No 4's CONT.
∘ 7/8" STUCCO EXTERIOR - CONT. 6" BELOW FIN. GRADE.
BTM. OF JOIST
11'-6 1/4"±
CHLORINATOR RM. D23
FINISH GRADE - VARIES
∘ 4" CONC. SLAB W/ 6×6 6/6 WWF
DAMPPROOF CONC. BELOW GRADE
11/17 SLAB EDGE
12/17 FDN. DTL.

D/20 SECT. LOOK'G EAST THRU CHLORINATOR RM. 1/4"=1'-0"

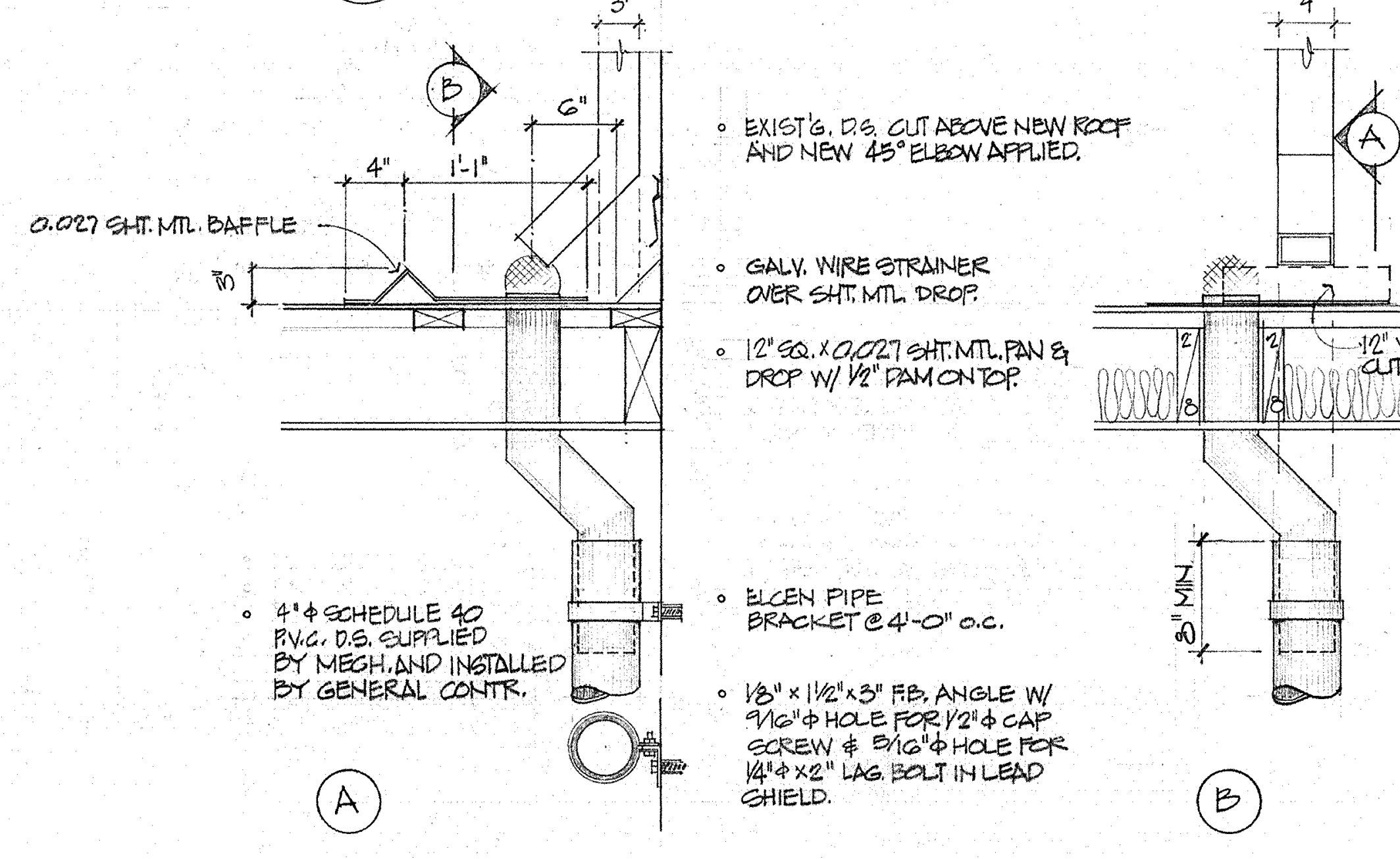
3"
B
6"
4"
1'-1"
0.027 SHT. MTL. BAFFLE
3"
∘ EXIST'G. D.S. CUT ABOVE NEW ROOF AND NEW 45° ELBOW APPLIED.
∘ GALV. WIRE STRAINER OVER SHT. MTL. DROP.
∘ 12" SQ. × 0.027 SHT. MTL. PAN & DROP W/ 1/2" DAM ON TOP.
4"
A
12" WIDE BAFFLE CUT PAN AROUND D.S.
∘ 4"φ SCHEDULE 40 P.V.C. D.S. SUPPLIED BY MECH. AND INSTALLED BY GENERAL CONTR.
∘ ELCEN PIPE BRACKET @ 4'-0" o.c.
8" MIN.
∘ 1/8" × 1 1/2" × 3" F.B. ANGLE W/ 9/16"φ HOLE FOR 1/2"φ CAP SCREW & 5/16"φ HOLE FOR 1/4"φ × 2" LAG. BOLT IN LEAD SHIELD.
A
B

5/20 DOWNSPOUT DTL. @ CHLORINATOR ROOM 1"=1'-0"

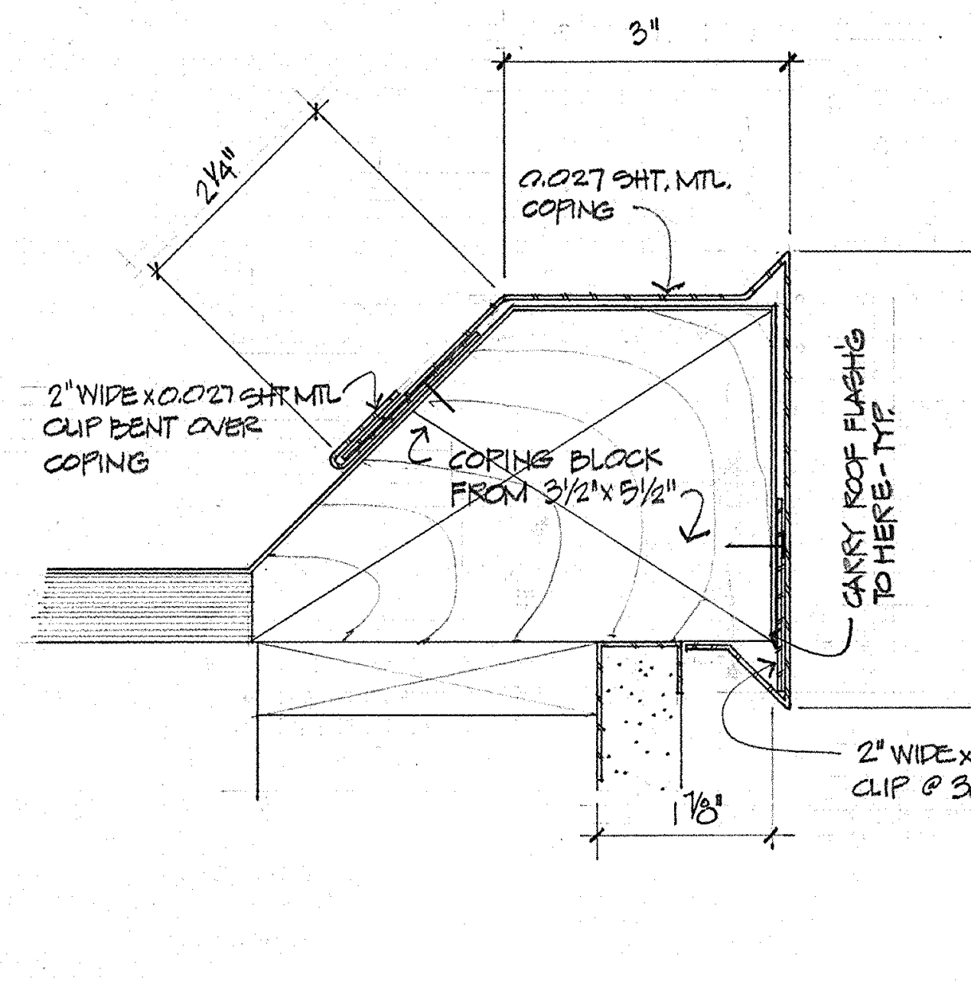
3"
2 1/4"
0.027 SHT. MTL. COPING
2" WIDE × 0.027 SHT. MTL. CLIP BENT OVER COPING
COPING BLOCK FROM 3 1/2" × 5 1/2"
CARRY ROOF FLASH'G TO HERE - TYP.
MATCH DIMENSION OF EXIST. COPING @ POOL MECH. ROOM ROOF
2" WIDE × 0.027 SHT. MTL. CLIP @ 30" o.c.
1 1/8"

6/20 COPING DETAIL @ CHLORINATOR ROOM ROOF 6"=1'-0"

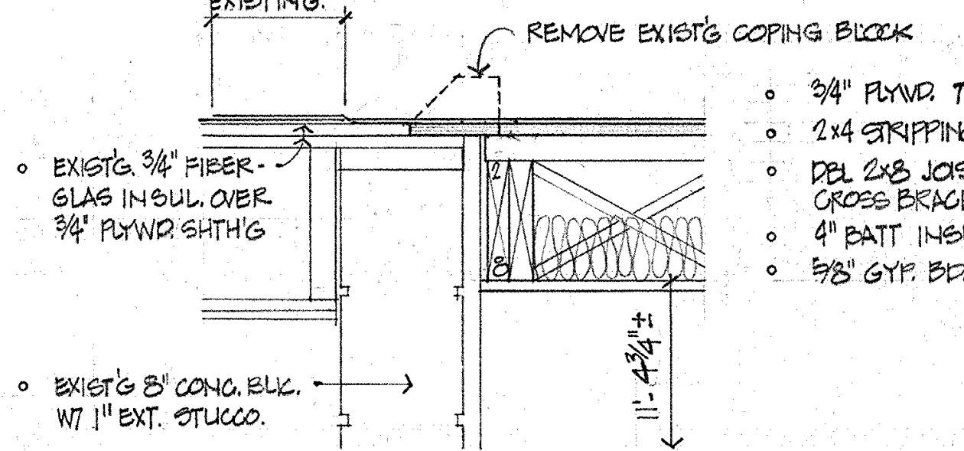
LAP NEW ROOF MIN 24" OVER EXISTING.
REMOVE EXIST'G COPING BLOCK
∘ 3/4" PLYWD. T&G.
∘ 2×4 STRIPPING @ 16" o.c.
∘ DBL 2×8 JOISTS 16" o.c. W/ CROSS BRACING @ MIDSPAN
∘ 4" BATT INSULATION
∘ 5/8" GYP. BD. CEILING
∘ EXIST'G. 3/4" FIBERGLAS INSUL. OVER 3/4" PLYWD. SHTH'G
∘ EXIST'G 8" CONC. BLK. W/ 1" EXT. STUCCO.
11'-4 3/4"±
SLAB IN POOL MECH. ROOM

9/20 DTL. @ NORTH WALL CHLORINATOR ROOM 1"=1'-0"

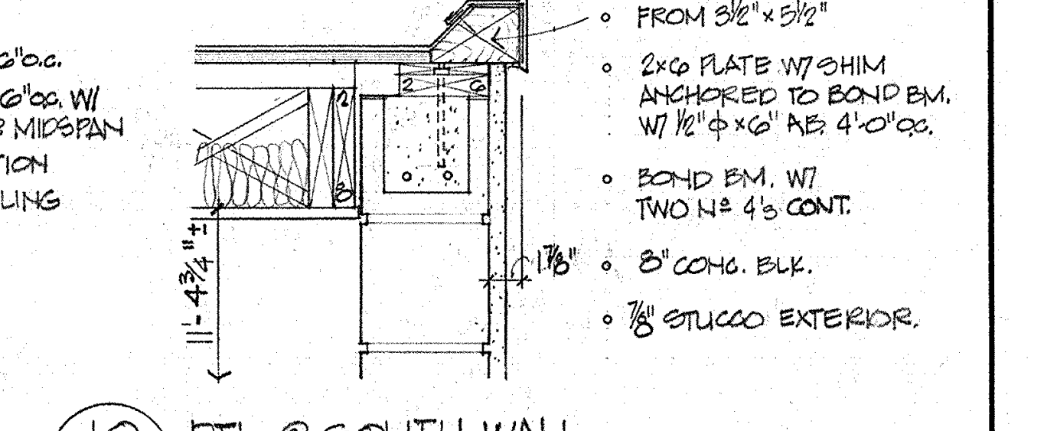
6/20 COPING DTL.
∘ FROM 3 1/2" × 5 1/2"
∘ 2×6 PLATE W/ SHIM ANCHORED TO BOND BM. W/ 1/2"φ × 6" AB. 4'-0" o.c.
∘ BOND BM. W/ TWO No 4's CONT.
1 7/8"
∘ 8" CONC. BLK.
∘ 7/8" STUCCO EXTERIOR.
11'-4 3/4"±

10/20 DTL. @ SOUTH WALL CHLORINATOR ROOM 1"=1'-0"

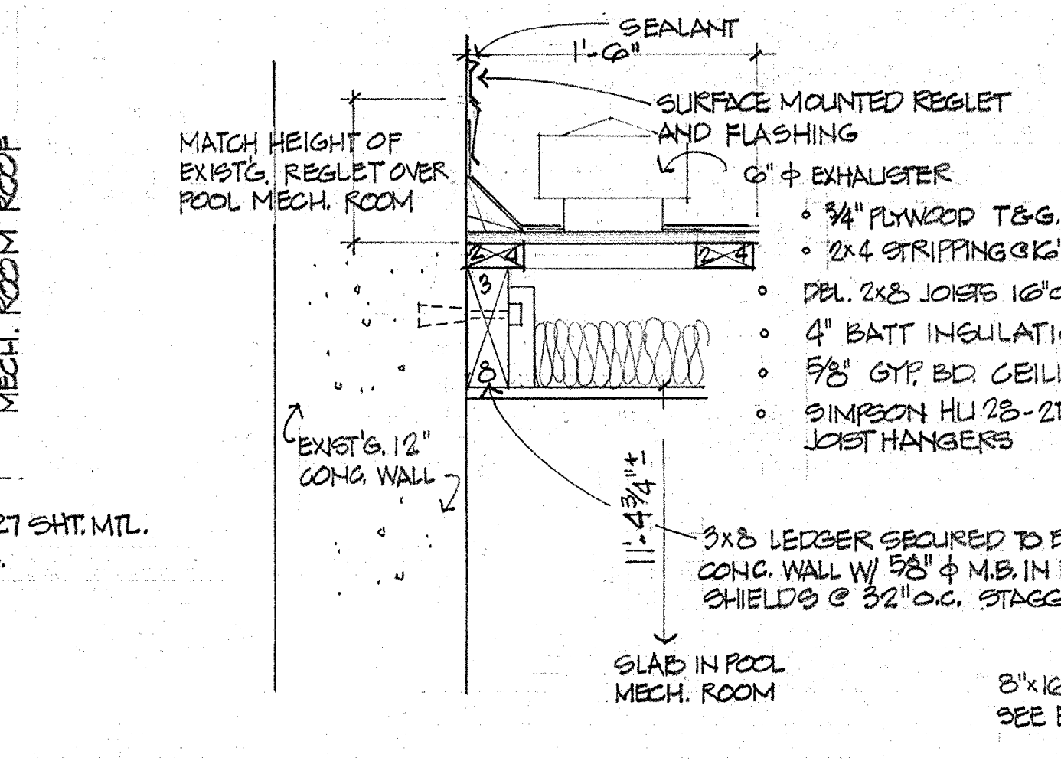
SEALANT
1'-6"
SURFACE MOUNTED REGLET AND FLASHING
6"φ EXHAUSTER
MATCH HEIGHT OF EXIST'G. REGLET OVER POOL MECH. ROOM
∘ 3/4" PLYWOOD T&G.
∘ 2×4 STRIPPING @ 16" o.c.
∘ DBL. 2×8 JOISTS 16" o.c.
∘ 4" BATT INSULATION
∘ 5/8" GYP. BD. CEILING.
∘ SIMPSON HU 28-2TF JOIST HANGERS
EXIST'G. 12" CONC. WALL
11'-4 3/4"±
3×8 LEDGER SECURED TO BLK. OR CONC. WALL W/ 5/8"φ M.B. IN EXPAN. SHIELDS @ 32" o.c. STAGGERED
SLAB IN POOL MECH. ROOM

7/20 DTL. @ EAST WALL CHLORINATOR ROOM 1"=1'-0"

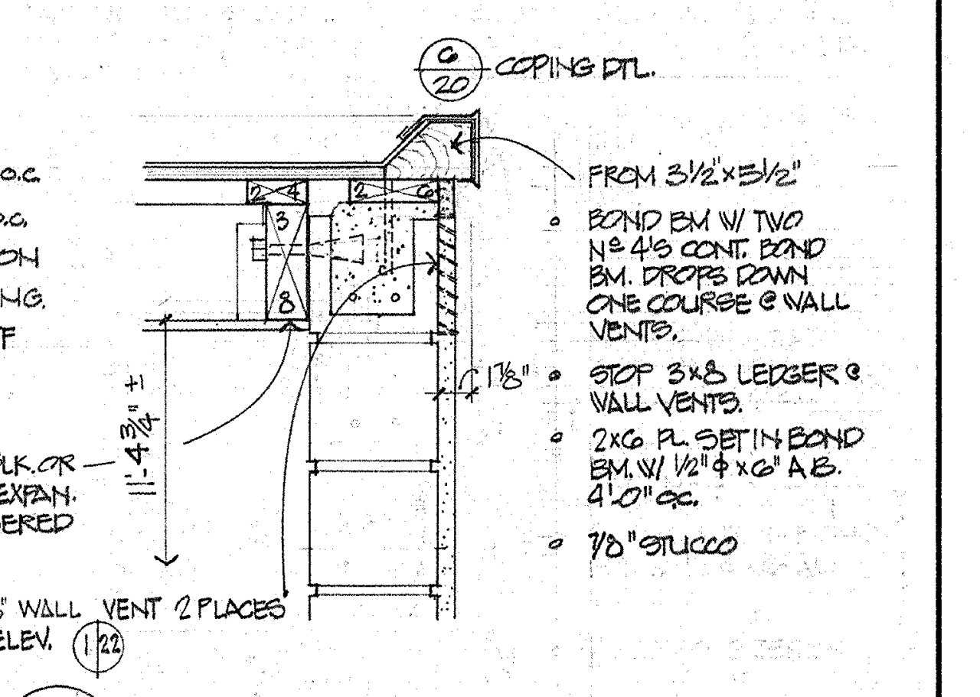
6/20 COPING DTL.
FROM 3 1/2" × 5 1/2"
∘ BOND BM W/ TWO No 4's CONT. BOND BM. DROPS DOWN ONE COURSE @ WALL VENTS.
1 7/8"
∘ STOP 3×8 LEDGER @ WALL VENTS.
∘ 2×6 PL. SET IN BOND BM. W/ 1/2"φ × 6" A.B. 4'-0" o.c.
∘ 7/8" STUCCO
11'-4 3/4"±
8"×16" WALL VENT 2 PLACES SEE ELEV. 1/22

8/20 DTL. @ WEST WALL CHLORINATOR ROOM 1"=1'-0"

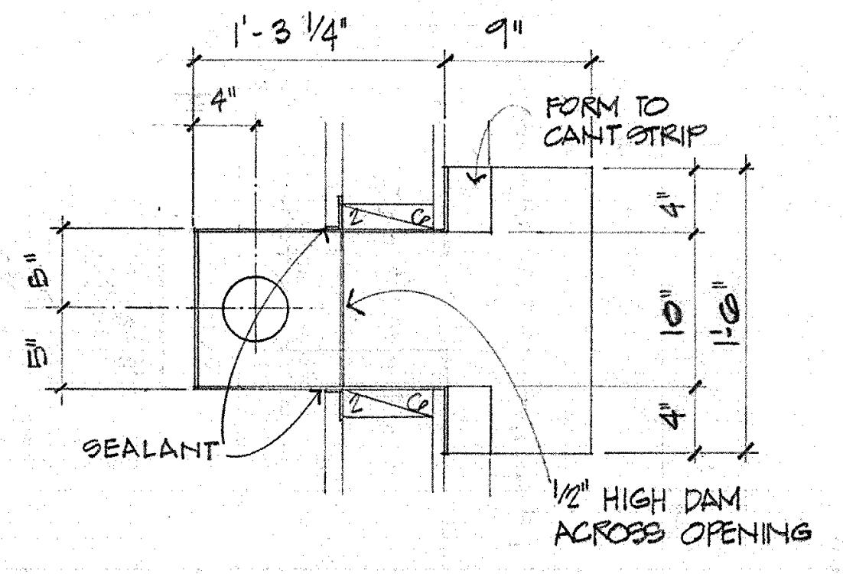
1'-3 1/4"
9"
4"
FORM TO CANT STRIP
8"
5"
4"
10"
1'-6"
4"
SEALANT
1/2" HIGH DAM ACROSS OPENING

A PLAN

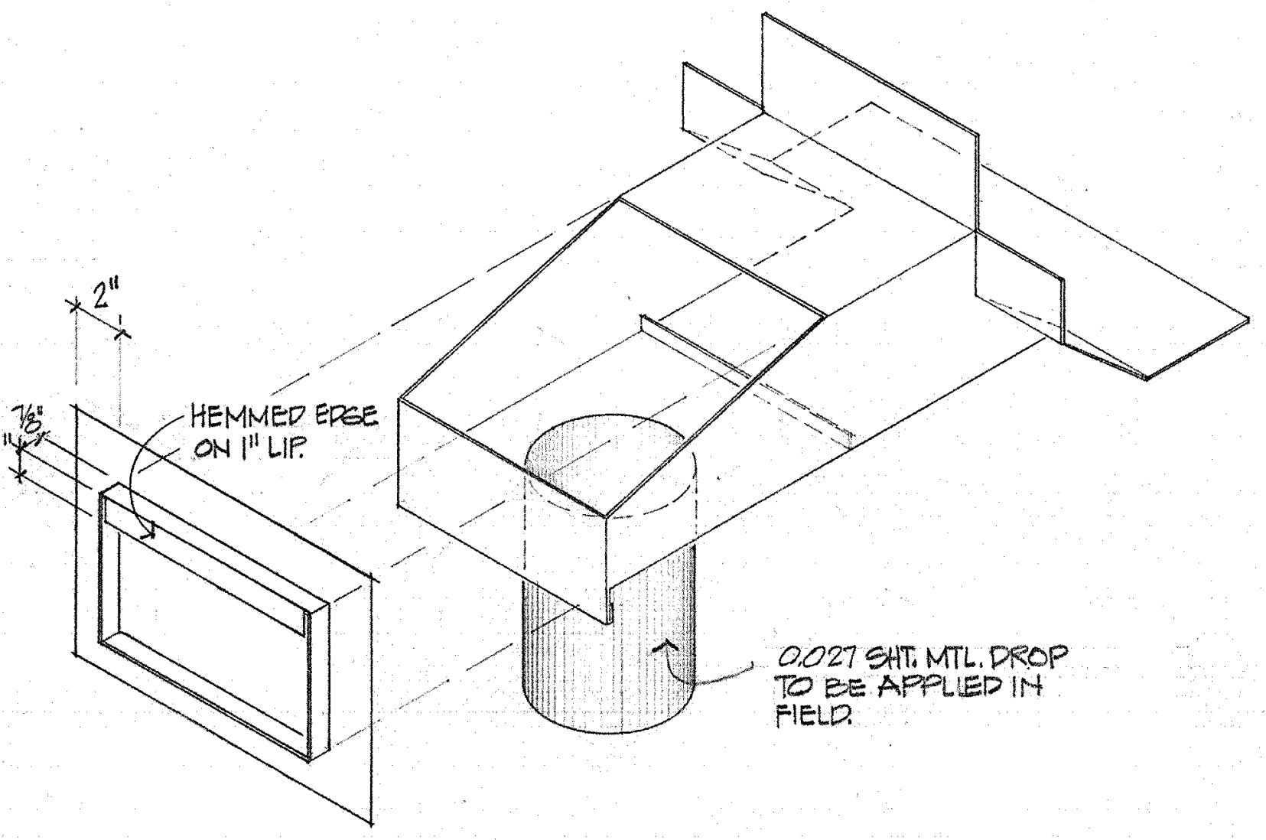
2"
7/8"
1"
HEMMED EDGE ON 1" LIP.
0.027 SHT. MTL. DROP TO BE APPLIED IN FIELD.

B ISOMETRIC NO SCALE

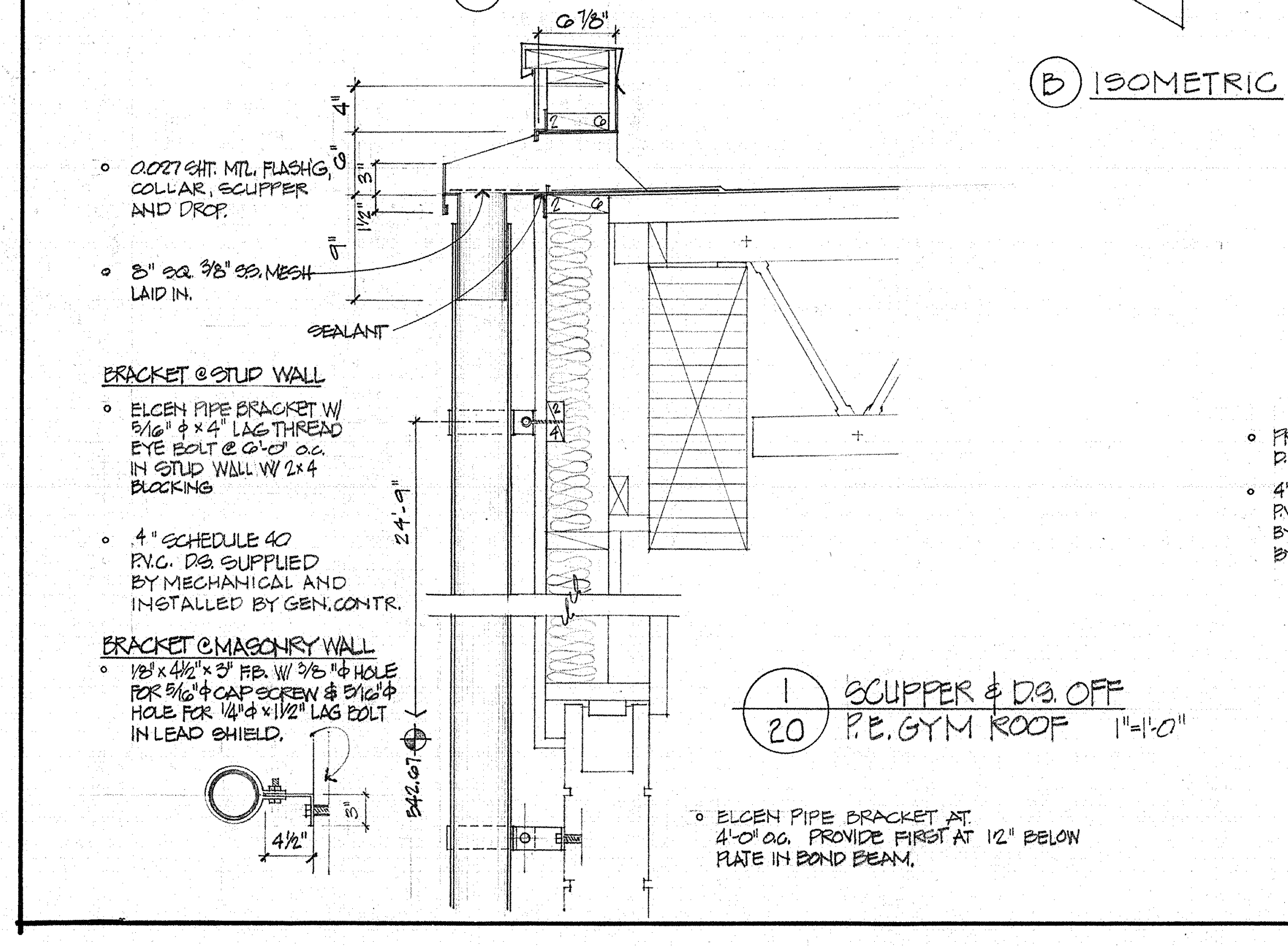
6 7/8"
4"
6"
3"
1 1/2"
9"
∘ 0.027 SHT. MTL. FLASH'G, COLLAR, SCUPPER AND DROP.
∘ 8" SQ. 3/8" SS. MESH LAID IN.
SEALANT
BRACKET @ STUD WALL
∘ ELCEN PIPE BRACKET W/ 5/16"φ × 4" LAG THREAD EYE BOLT @ 6'-0" o.c. IN STUD WALL W/ 2×4 BLOCKING
∘ 4" SCHEDULE 40 P.V.C. D.S. SUPPLIED BY MECHANICAL AND INSTALLED BY GEN. CONTR.
24'-9"
BRACKET @ MASONRY WALL
∘ 1/8" × 4 1/2" × 3" F.B. W/ 3/8"φ HOLE FOR 5/16"φ CAP SCREW & 5/16"φ HOLE FOR 1/4"φ × 1 1/2" LAG BOLT IN LEAD SHIELD.
342.67
4 1/2"
3"
∘ ELCEN PIPE BRACKET AT 4'-0" o.c. PROVIDE FIRST AT 12" BELOW PLATE IN BOND BEAM.

1/20 SCUPPER & D.S. OFF P.E. GYM ROOF 1"=1'-0"

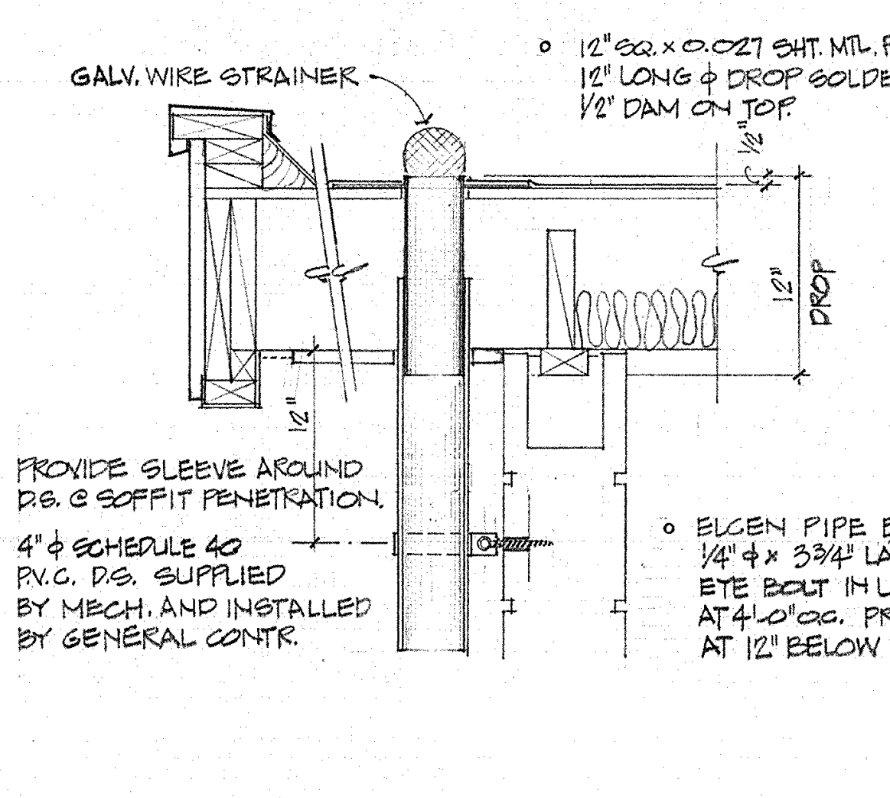
GALV. WIRE STRAINER
∘ 12" SQ. × 0.027 SHT. MTL. PAN W/ 12" LONG φ DROP SOLDERED W/ 1/2" DAM ON TOP.
1/2"
12" DROP
12"
∘ PROVIDE SLEEVE AROUND D.S. @ SOFFIT PENETRATION.
∘ 4"φ SCHEDULE 40 P.V.C. D.S. SUPPLIED BY MECH. AND INSTALLED BY GENERAL CONTR.
∘ ELCEN PIPE BRACKET W/ 1/4"φ × 3 3/4" LAG THREAD EYE BOLT IN LEAD SHIELD AT 4'-0" o.c. PROVIDE FIRST AT 12" BELOW JOISTS.

2/20 DOWNSPOUT @ NORTH EAVE LOWER ROOF 1"=1'-0"

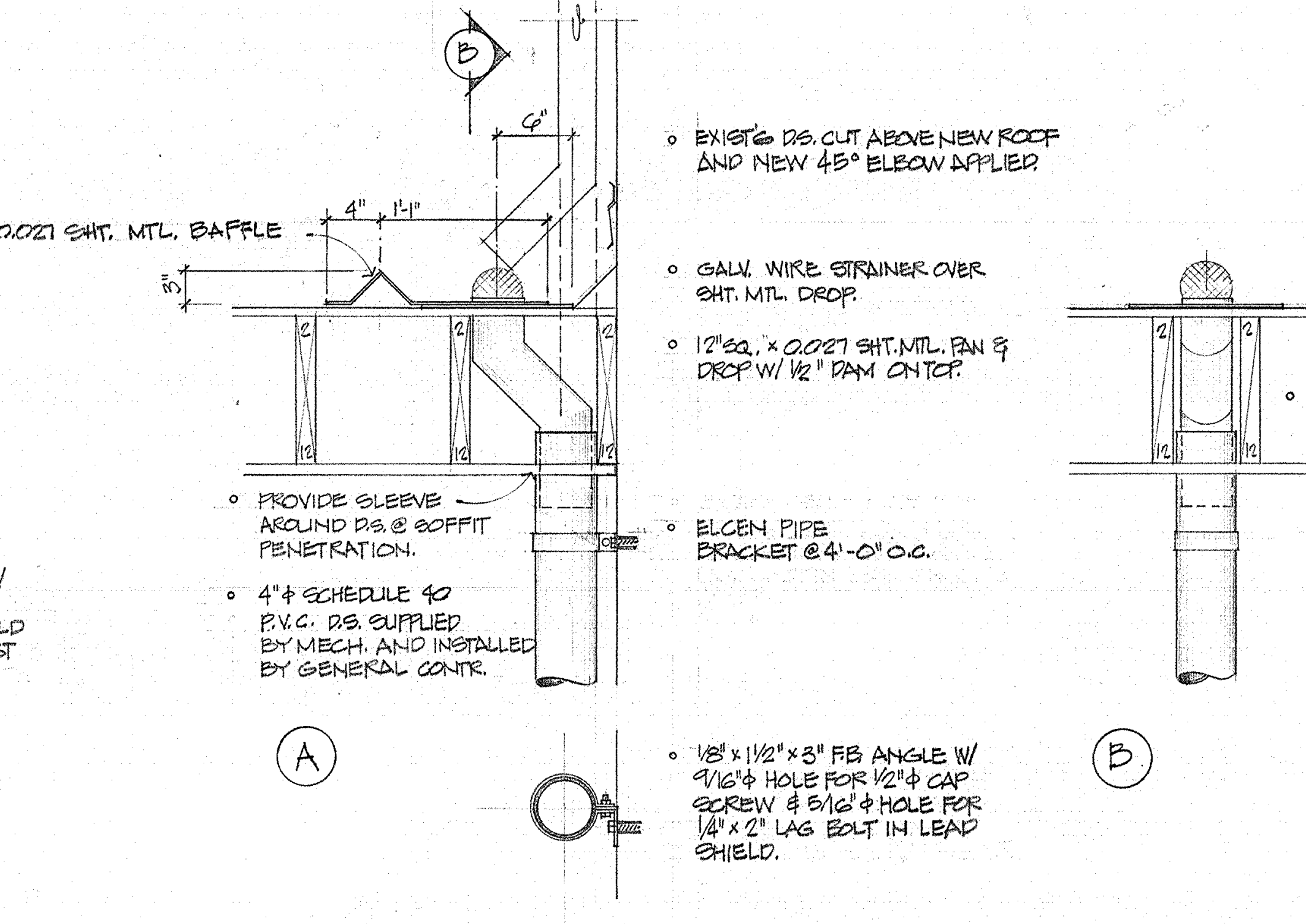
3"
B
6"
4"
1'-1"
0.027 SHT. MTL. BAFFLE
3"
∘ EXIST'G D.S. CUT ABOVE NEW ROOF AND NEW 45° ELBOW APPLIED
∘ GALV. WIRE STRAINER OVER SHT. MTL. DROP.
∘ 12" SQ. × 0.027 SHT. MTL. PAN & DROP W/ 1/2" DAM ON TOP.
4"
A
12" WIDE BAFFLE
∘ 2×12 BLOCKING
∘ PROVIDE SLEEVE AROUND D.S. @ SOFFIT PENETRATION.
∘ 4"φ SCHEDULE 40 P.V.C. D.S. SUPPLIED BY MECH. AND INSTALLED BY GENERAL CONTR.
∘ ELCEN PIPE BRACKET @ 4'-0" o.c.
∘ 1/8" × 1 1/2" × 3" F.B. ANGLE W/ 9/16"φ HOLE FOR 1/2"φ CAP SCREW & 5/16"φ HOLE FOR 1/4" × 2" LAG BOLT IN LEAD SHIELD.
A
B

3/20 DOWNSPOUT DTL. @ LOADING DOCK 1"=1'-0"

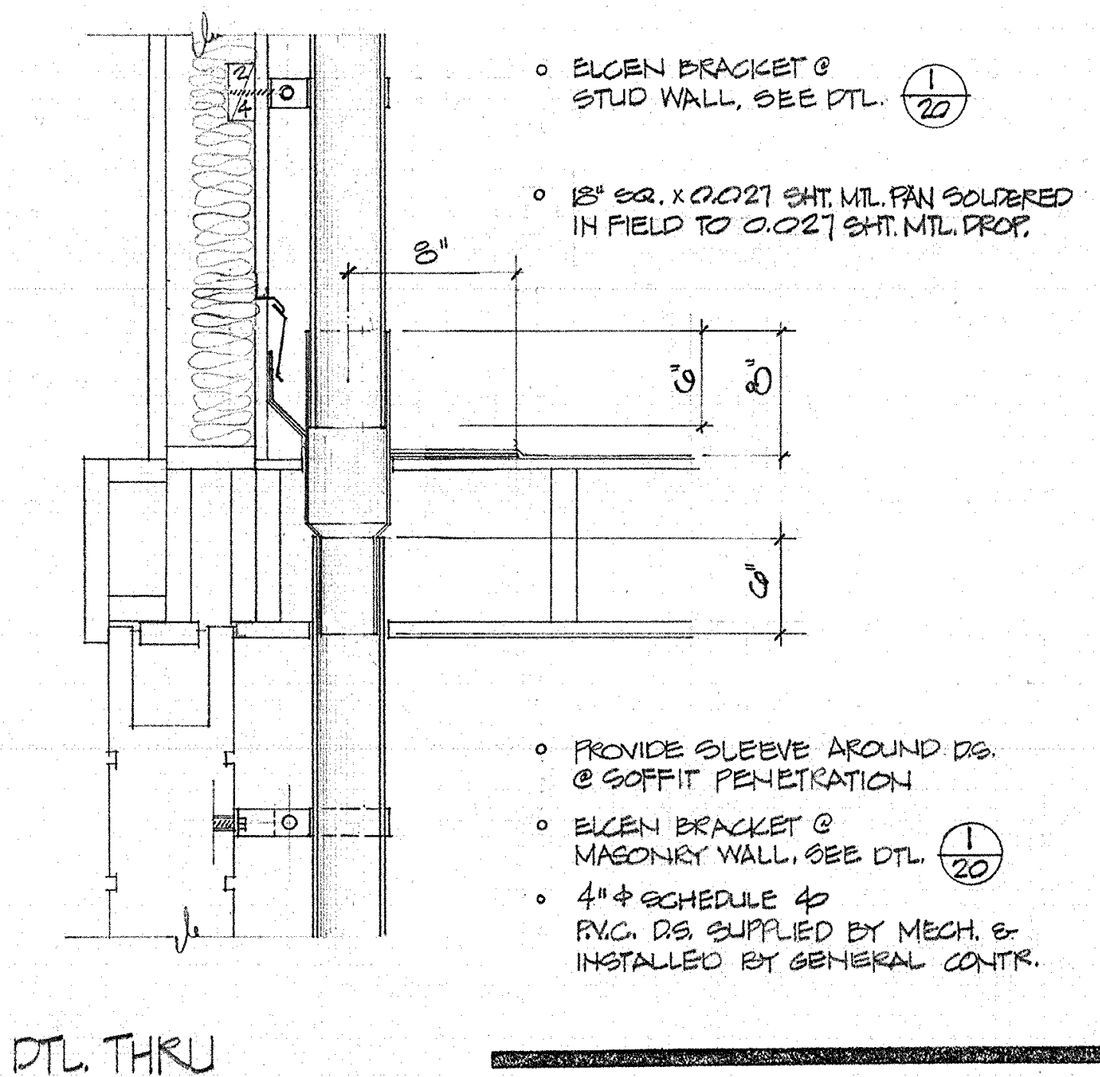
∘ ELCEN BRACKET @ STUD WALL, SEE DTL. 1/20
∘ 18" SQ. × 0.027 SHT. MTL. PAN SOLDERED IN FIELD TO 0.027 SHT. MTL. DROP.
8"
6"
8"
6"
∘ PROVIDE SLEEVE AROUND D.S. @ SOFFIT PENETRATION
∘ ELCEN BRACKET @ MASONRY WALL, SEE DTL. 1/20
∘ 4"φ SCHEDULE 40 P.V.C. D.S. SUPPLIED BY MECH. & INSTALLED BY GENERAL CONTR.

4/20 D.S. DTL. THRU LOWER ROOF 1"=1'-0"

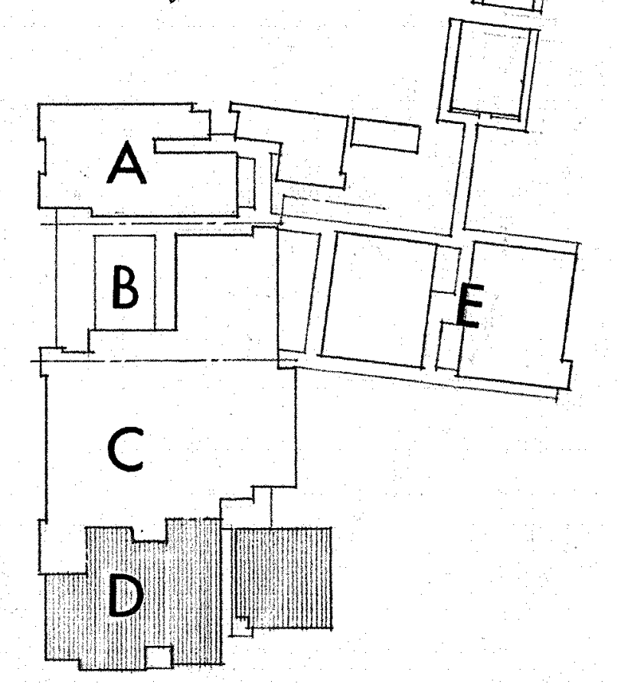

ROOF PLAN, SECTIONS & DETAILS – SECTOR D

SWEET HOME HIGH SCHOOL
ADDITIONS AND ALTERATIONS 1974
DISTRICT 55 LINN COUNTY, OREGON

ARCHITECTS
HAMLIN, MARTIN,
SCHULTZ & GEYER
AIA
159 W. 12TH EUGENE, OREGON 97401

A
20
JOB NO.

REGISTERED ARCHITECT
CLARE K. HAMLIN
Clare K Hamlin
EUGENE, OREGON
STATE OF OREGON

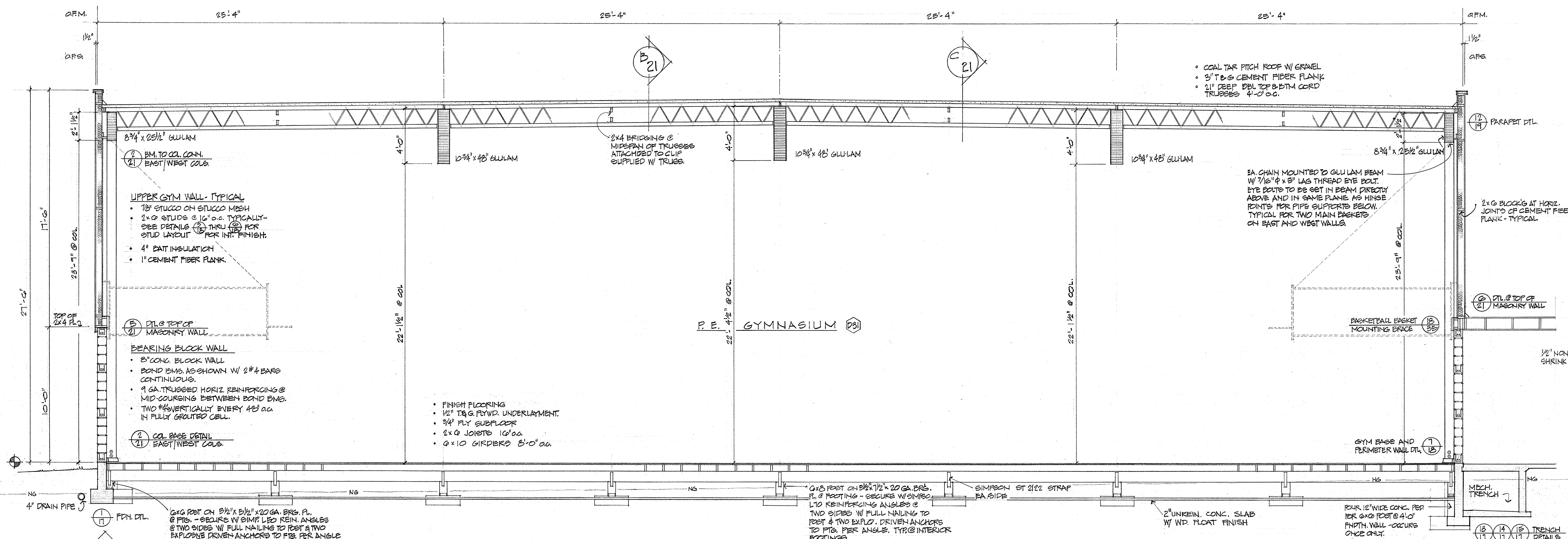
O.F.M.
25'-4"
25'-4"
25'-4"
25'-4"
1½"
O.F.S.
B 21
C 21
8¾" x 25½" GLULAM
2 21 BM. TO COL. CONN. EAST/WEST COLS.
10¾" x 48" GLULAM
10¾" x 48" GLU-LAM
10¾" x 48" GLU-LAM
2x4 BRIDGING @ MIDSPAN OF TRUSSES ATTACHED TO CLIP SUPPLIED W/ TRUSS.
4'-0"
• COAL TAR PITCH ROOF W/ GRAVEL
• 3" T&G CEMENT FIBER PLANK
• 21" DEEP DBL TOP & BTM CORD TRUSSES 4'-0" o.c.
12 19 PARAPET DTL.
8¾" x 25½" GLU-LAM
EA. CHAIN MOUNTED TO GLU LAM BEAM W/ 7/16"ϕ x 5" LAG THREAD EYE BOLT. EYE BOLTS TO BE SET IN BEAM DIRECTLY ABOVE AND IN SAME PLANE AS HINGE POINTS FOR PIPE SUPPORTS BELOW. TYPICAL FOR TWO MAIN BASKETS ON EAST AND WEST WALLS.
2x6 BLOCK'G AT HORIZ. JOINTS OF CEMENT FIBER PLANK - TYPICAL.
UPPER GYM WALL - TYPICAL
• 7/8" STUCCO ON STUCCO MESH
• 2x6 STUDS @ 16" o.c. TYPICALLY - SEE DETAILS 3/18 THRU 6/18 FOR STUD LAYOUT FOR INT. FINISH.
• 4" BATT INSULATION
• 1" CEMENT FIBER PLANK.
17'-6"
27'-6"
23'-9" @ COL.
2'-1½"
TOP OF 2x4 PL.
10'-0"
5 21 DTL @ TOP OF MASONRY WALL
BEARING BLOCK WALL
• 8" CONC. BLOCK WALL
• BOND BMS. AS SHOWN W/ 2 #4 BARS CONTINUOUS.
• 9 GA. TRUSSED HORIZ. REINFORCING @ MID-COURSING BETWEEN BOND BMS.
• TWO #4's VERTICALLY EVERY 48" o.c. IN FULLY GROUTED CELL.
2 21 COL. BASE DETAIL EAST/WEST COLS.
P.E. GYMNASIUM D31
22'-1½" @ COL.
22'-4½" @ COL.
22'-1½" @ COL.
23'-9" @ COL.
6 21 DTL. @ TOP OF MASONRY WALL
BASKETBALL BASKET MOUNTING BRACE 18 35
• FINISH FLOORING
• 1/2" T&G PLYWD. UNDERLAYMENT.
• 3/4" PLY SUBFLOOR
• 2x6 JOISTS 16" o.c.
• 6x10 GIRDERS 8'-0" o.c.
GYM BASE AND PERIMETER WALL DTL. 7 18
542.67
NG
NG
NG
NG
NG
4" DRAIN PIPE
1 17 FDN. DTL.
6x6 POST ON 5½" x 5½" x 20 GA. BRG. PL. @ FTG. - SECURE W/ SIMP. L50 REIN. ANGLES @ TWO SIDES W/ FULL NAILING TO POST & TWO EXPLOSIVE DRIVEN ANCHORS TO FTG. PER ANGLE TYP. @ PERIMETER WALLS.
6x8 POST ON 5½" x 7½" x 20 GA. BRG. PL. @ FOOTING - SECURE W/ SIMPSON L70 REINFORCING ANGLES @ TWO SIDES W/ FULL NAILING TO POST & TWO EXPLO. DRIVEN ANCHORS TO FTG. PER ANGLE. TYP. @ INTERIOR FOOTINGS.
SIMPSON ST 2122 STRAP EA. SIDE
2" UNREIN. CONC. SLAB W/ WD. FLOAT FINISH
FOUR 12" WIDE CONC. PED. FOR 6x6 POST @ 4'-0" FNDTN. WALL - OCCURS ONCE ONLY.
MECH. TRENCH
13 17 14 17 15 17 TRENCH DETAILS

A 21 SECTION LOOKING NORTH THRU P.E. GYMNASIUM 1/4" = 1'-0"

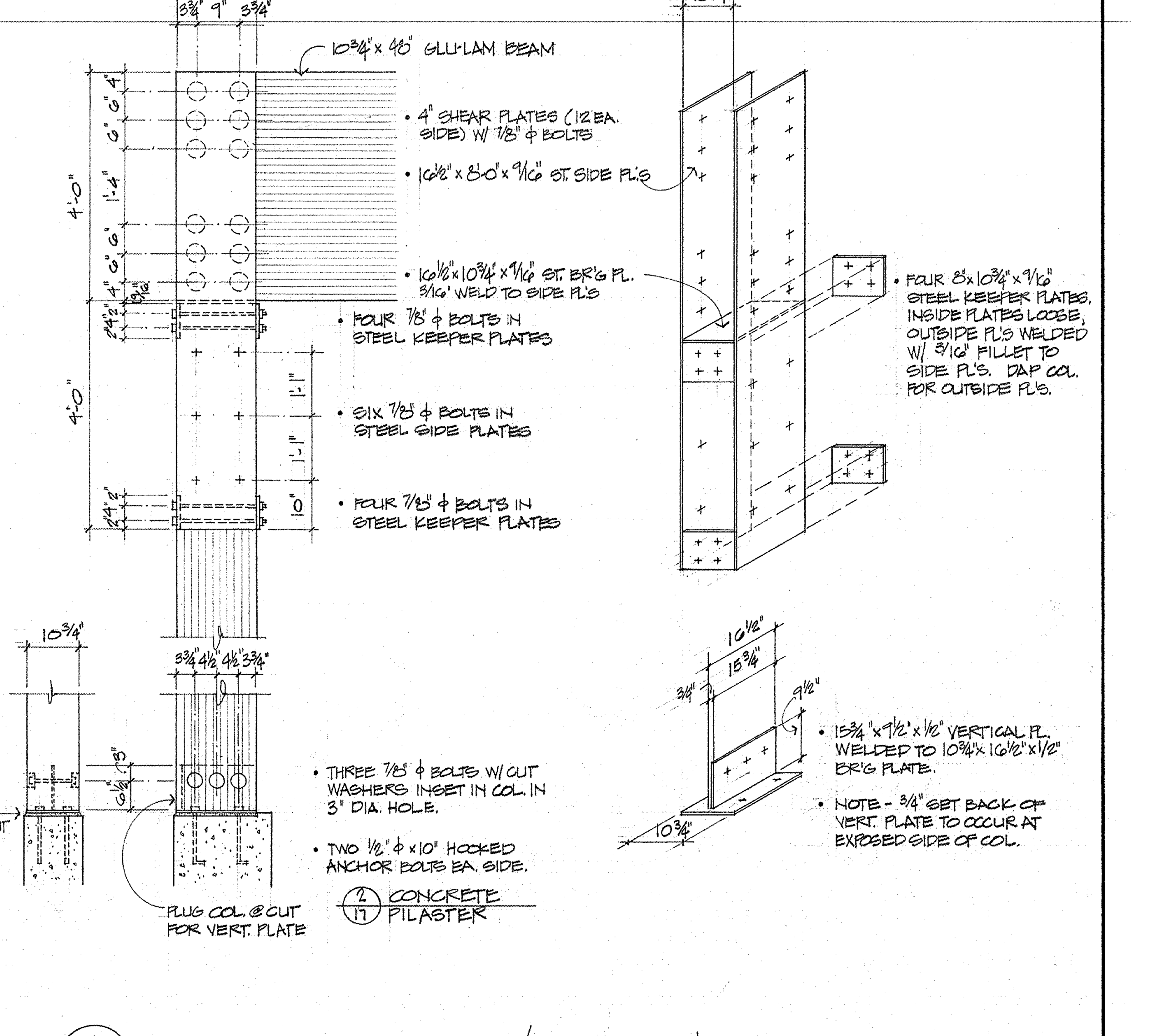
16½"
3¾" 9" 3¾"
10¾" x 48" GLU-LAM BEAM
• 4" SHEAR PLATES (12 EA. SIDE) W/ 7/8" ϕ BOLTS
• 16½" x 8'-0" x 9/16" ST. SIDE PL'S
• 16½" x 10¾" x 9/16" ST. BR'G PL. 3/16" WELD TO SIDE PL'S
• FOUR 7/8" ϕ BOLTS IN STEEL KEEPER PLATES
• SIX 7/8" ϕ BOLTS IN STEEL SIDE PLATES
• FOUR 7/8" ϕ BOLTS IN STEEL KEEPER PLATES
4'-0"
4'-0"
4" 6" 6" 1'-4" 6" 6" 4"
1'-1"
1'-1"
10"
10¾"
• FOUR 8" x 10¾" x 9/16" STEEL KEEPER PLATES, INSIDE PLATES LOOSE, OUTSIDE PL'S WELDED W/ 3/16" FILLET TO SIDE PL'S. DAP COL. FOR OUTSIDE PL'S.
10¾"
3¾" 4½" 4½" 3¾"
6½" 3"
1/2" NON-SHRINK GROUT
• THREE 7/8" ϕ BOLTS W/ CUT WASHERS INSET IN COL. IN 3" DIA. HOLE.
• TWO 1/2" ϕ x 10" HOOKED ANCHOR BOLTS EA. SIDE.
PLUG COL. @ CUT FOR VERT. PLATE
2 17 CONCRETE PILASTER
16½"
15¾"
3/4"
9½"
10¾"
• 15¾" x 9½" x 1/2" VERTICAL PL. WELDED TO 10¾" x 16½" x 1/2" BR'G PLATE.
• NOTE - 3/4" SET BACK OF VERT. PLATE TO OCCUR AT EXPOSED SIDE OF COL.

1 21 CONNECTION DTLS. - NORTH/SOUTH COLS. & GLULAM BMS. BASE CONDITION. 1/2" = 1'-0"

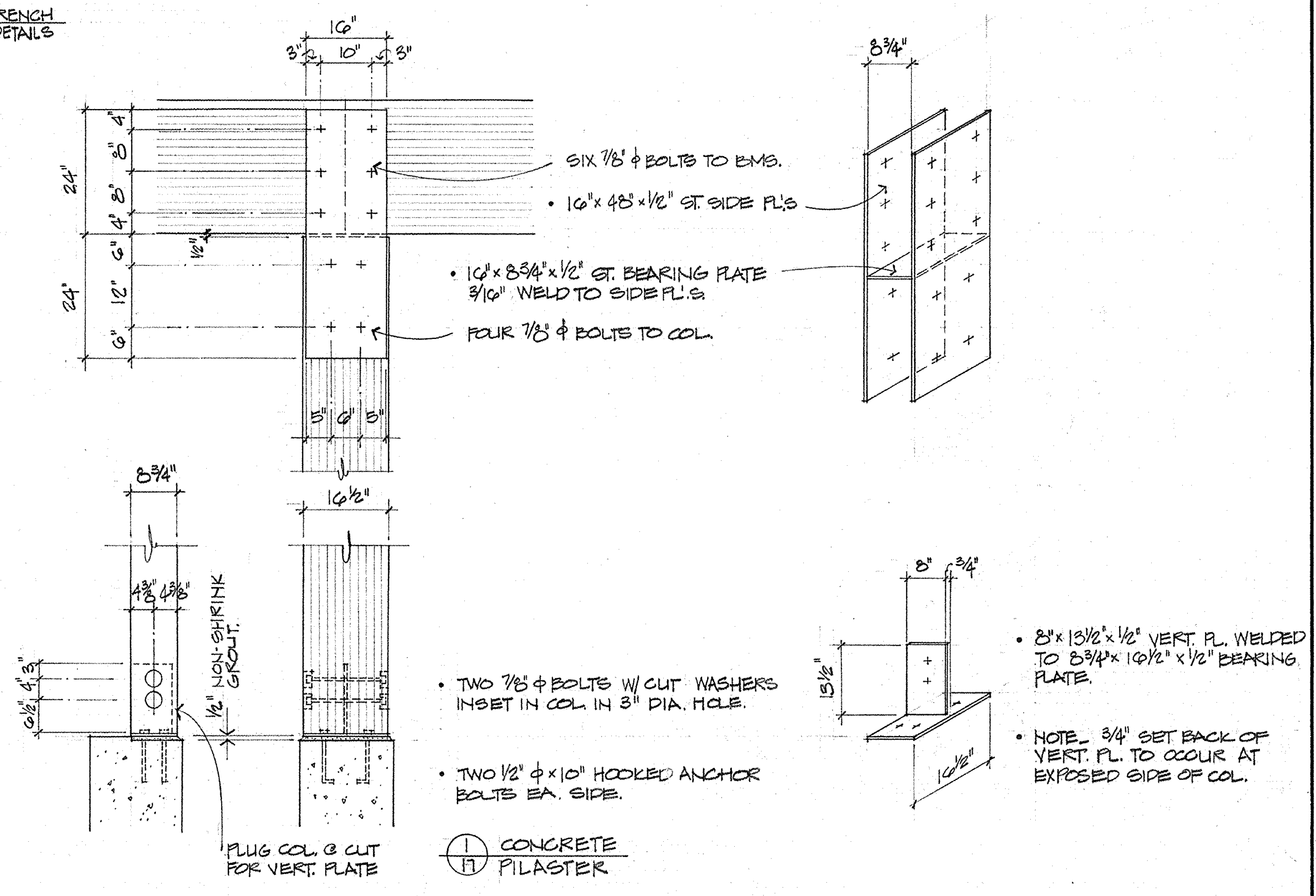
16"
3" 10" 3"
24"
24"
4" 8" 8" 4"
6" 12" 6"
1/2"
SIX 7/8" ϕ BOLTS TO BMS.
• 16" x 48" x 1/2" ST. SIDE PL'S
• 16" x 8¾" x 1/2" ST. BEARING PLATE 3/16" WELD TO SIDE PL'S.
FOUR 7/8" ϕ BOLTS TO COL.
5" 6" 5"
8¾"
8¾"
16½"
4⅜" 4⅜"
1/2" NON-SHRINK GROUT
6½" 4" 3"
• TWO 7/8" ϕ BOLTS W/ CUT WASHERS INSET IN COL. IN 3" DIA. HOLE.
• TWO 1/2" ϕ x 10" HOOKED ANCHOR BOLTS EA. SIDE.
PLUG COL. @ CUT FOR VERT. PLATE
1 17 CONCRETE PILASTER
8"
3/4"
13½"
16½"
• 8" x 13½" x 1/2" VERT. PL. WELDED TO 8¾" x 16½" x 1/2" BEARING PLATE.
• NOTE - 3/4" SET BACK OF VERT. PL. TO OCCUR AT EXPOSED SIDE OF COL.

2 21 CONNECTION DTLS - EAST/WEST COLS. & GLULAM BMS. BASE CONDITION 1/2" = 1'-0"

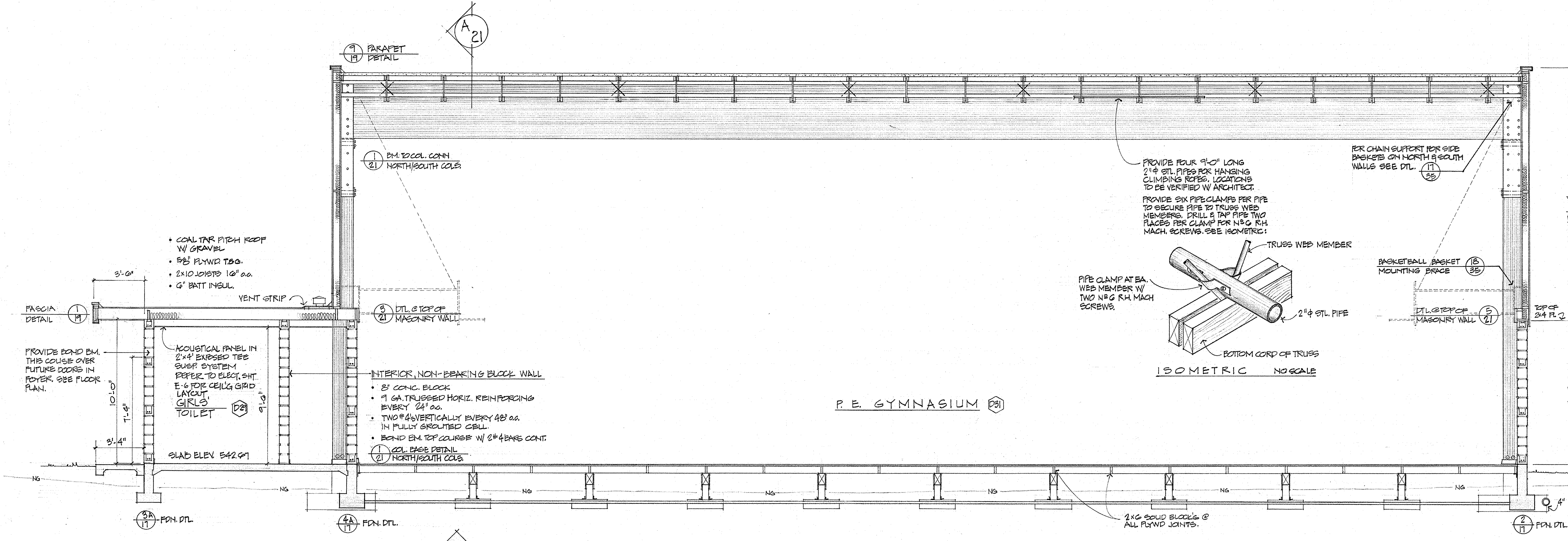
A 21
9 19 PARAPET DETAIL
1 21 BM. TO COL. CONN NORTH/SOUTH COLS.
PROVIDE FOUR 9'-0" LONG 2" ϕ STL. PIPES FOR HANGING CLIMBING ROPES. LOCATIONS TO BE VERIFIED W/ ARCHITECT.
PROVIDE SIX PIPE CLAMPS PER PIPE TO SECURE PIPE TO TRUSS WEB MEMBERS. DRILL & TAP PIPE TWO PLACES PER CLAMP FOR No 6 R.H. MACH. SCREWS. SEE ISOMETRIC:
TRUSS WEB MEMBER
PIPE CLAMP AT EA. WEB MEMBER W/ TWO No 6 R.H. MACH SCREWS.
2" ϕ STL. PIPE
BOTTOM CORD OF TRUSS
ISOMETRIC NO SCALE
FOR CHAIN SUPPORT FOR SIDE BASKETS ON NORTH & SOUTH WALLS SEE DTL. 17 35
BASKETBALL BASKET MOUNTING BRACE 18 35
DTL. @ TOP OF MASONRY WALL 5 21
TOP OF 2x4 PL.
17'-6"
27'-6"
10'-0"
542.67
• COAL TAR PITCH ROOF W/ GRAVEL
• 5/8" PLYWD. T&G.
• 2x10 JOISTS 16" o.c.
• 6" BATT INSUL.
3'-6"
VENT STRIP
FASCIA DETAIL 1 19
3 21 DTL. @ TOP OF MASONRY WALL
PROVIDE BOND BM. THIS COURSE OVER FUTURE DOORS IN FOYER. SEE FLOOR PLAN.
ACOUSTICAL PANEL IN 2'x4' EXPOSED TEE SUSP. SYSTEM REFER TO ELECT. SHT E-6 FOR CEIL'G GRID LAYOUT.
GIRLS' TOILET D29
10'-0"
7'-4"
9'-6"
3'-4"
SLAB ELEV. 542.67
INTERIOR, NON-BEARING BLOCK WALL
• 8" CONC. BLOCK
• 9 GA. TRUSSED HORIZ. REINFORCING EVERY 24" o.c.
• TWO #4's VERTICALLY EVERY 48" o.c. IN FULLY GROUTED CELL.
• BOND BM. TOP COURSE W/ 2 #4 BARS CONT.
1 21 COL. BASE DETAIL NORTH/SOUTH COLS.
P.E. GYMNASIUM D31
NG
NG
NG
NG
NG
3A 17 FDN. DTL.
4A 17 FDN. DTL.
2x6 SOLID BLOCK'G @ ALL PLYWD JOINTS.
4" DRAIN PIPE
2 17 FDN. DTL.

B 21 SECTION LOOKING EAST THRU P.E. GYMNASIUM 1/4" = 1'-0"

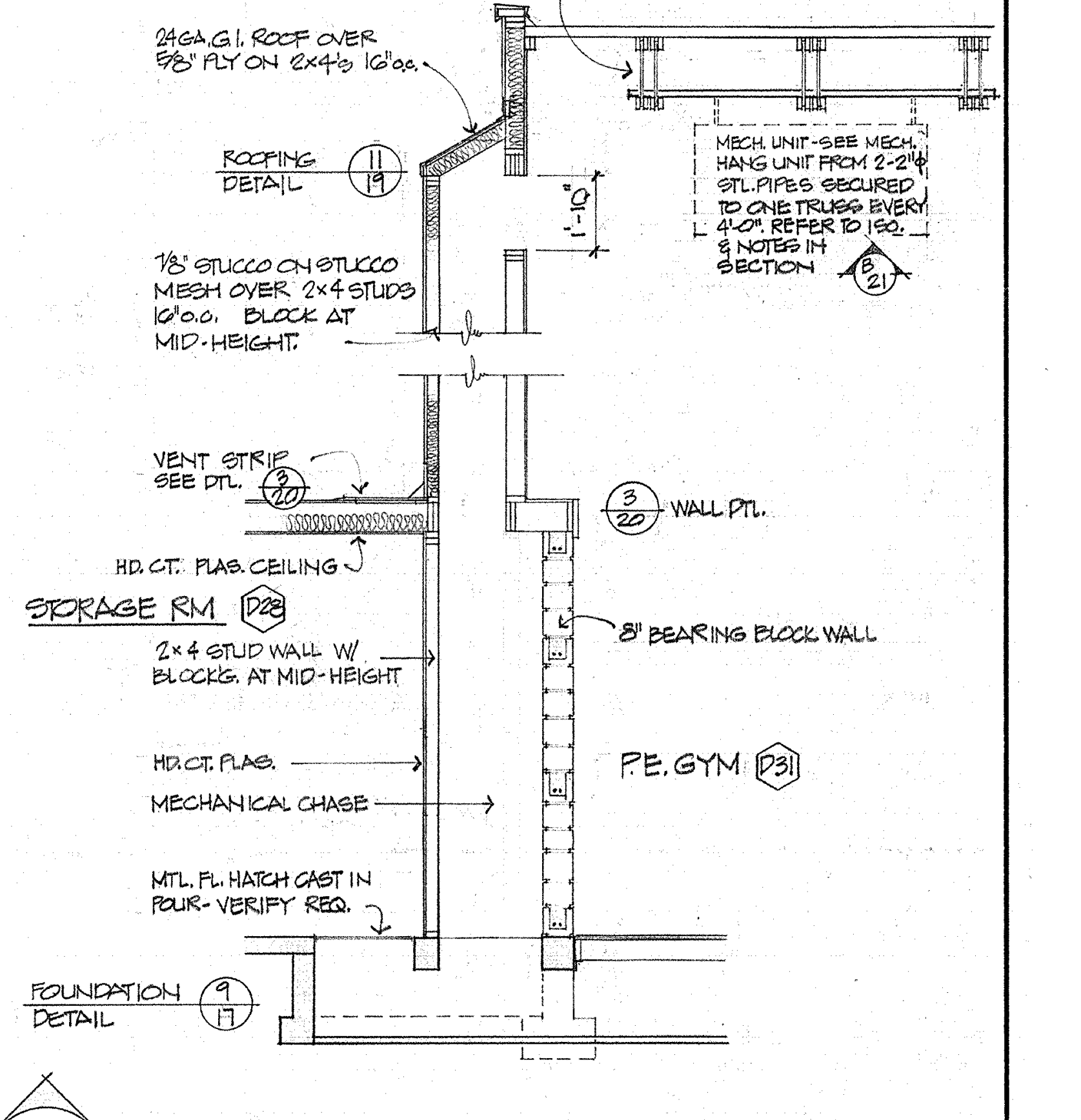
DBL. FIRST THREE ROOF TRUSSES THIS SPAN FOR MECH. UNIT.
24 GA. G.I. ROOF OVER 5/8" PLY ON 2x4's 16" o.c.
ROOFING DETAIL 11 19
1'-10"
MECH. UNIT - SEE MECH. HANG UNIT FROM 2-2" ϕ STL. PIPES SECURED TO ONE TRUSS EVERY 4'-0". REFER TO ISO. & NOTES IN SECTION B 21
7/8" STUCCO ON STUCCO MESH OVER 2x4 STUDS 16" o.c. BLOCK AT MID-HEIGHT.
VENT STRIP SEE DTL. 3 20
3 20 WALL DTL.
HD. CT. PLAS. CEILING
STORAGE RM D28
2x4 STUD WALL W/ BLOCK'G. AT MID-HEIGHT
8" BEARING BLOCK WALL
HD. CT. PLAS.
MECHANICAL CHASE
P.E. GYM D31
MTL. FL. HATCH CAST IN POUR - VERIFY REQ.
FOUNDATION DETAIL 9 17

C 21 SECTION LOOKING EAST THRU MECHANICAL CHASE 1/4 = 1'-0"

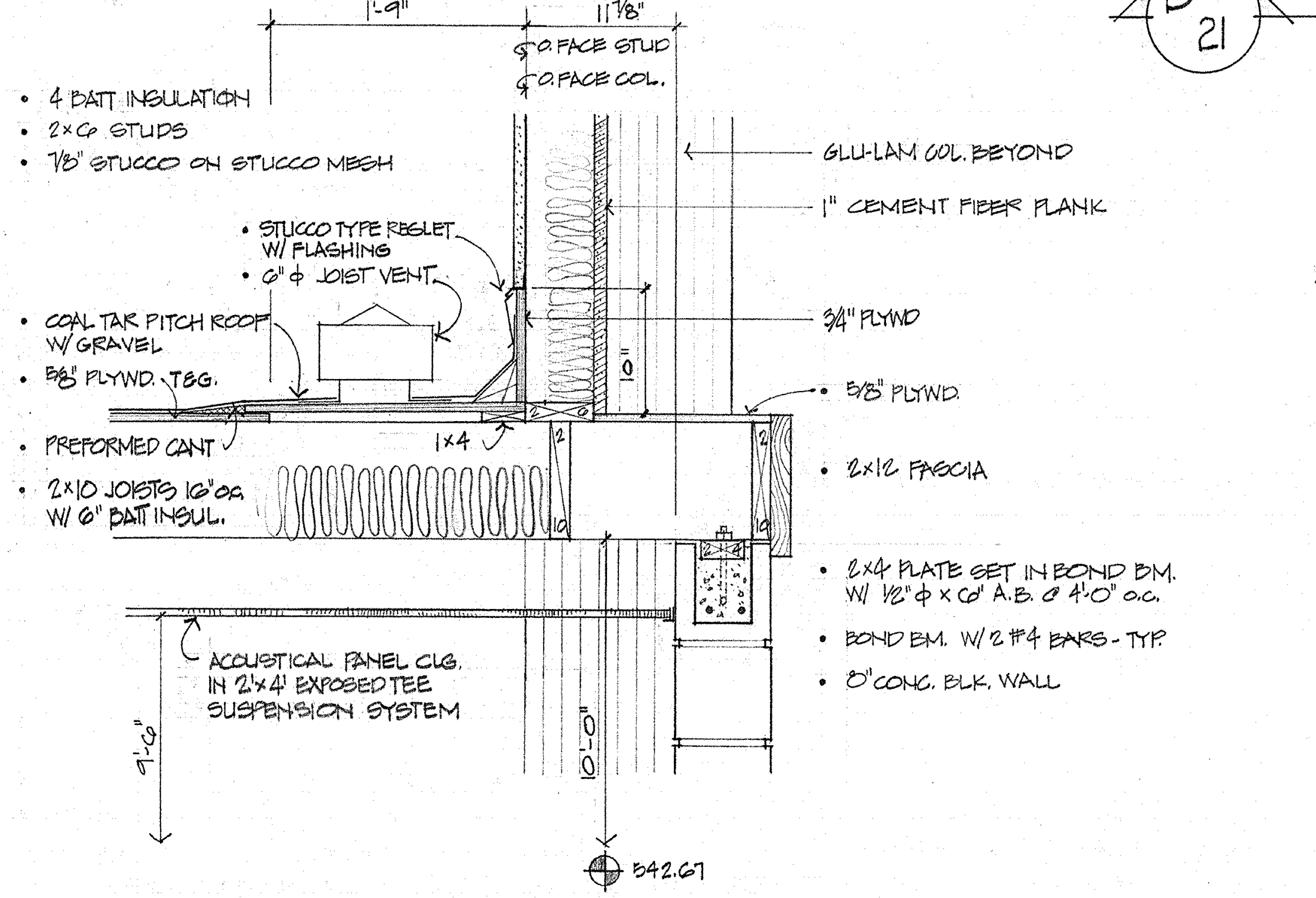
1'-9"
11⅞"
℄ O. FACE STUD
℄ O. FACE COL.
• 4 BATT INSULATION
• 2x6 STUDS
• 7/8" STUCCO ON STUCCO MESH
GLU-LAM COL. BEYOND
1" CEMENT FIBER PLANK
• STUCCO TYPE REGLET W/ FLASHING
• 6" ϕ JOIST VENT.
• COAL TAR PITCH ROOF W/ GRAVEL
• 5/8" PLYWD. T&G.
3/4" PLYWD
• 5/8" PLYWD.
• PREFORMED CANT
1x4
• 2x10 JOISTS 16" o.c. W/ 6" BATT INSUL.
• 2x12 FASCIA
• 2x4 PLATE SET IN BOND BM. W/ 1/2" ϕ x 6" A.B. @ 4'-0" o.c.
• BOND BM. W/ 2 #4 BARS - TYP.
• 8" CONC. BLK. WALL
ACOUSTICAL PANEL CLG. IN 2'x4' EXPOSED TEE SUSPENSION SYSTEM
9'-6"
10'-0"
542.67

3 21 STUD WALL TO MASONRY DTL. NORTH GYM WALL 1" = 1'-0"

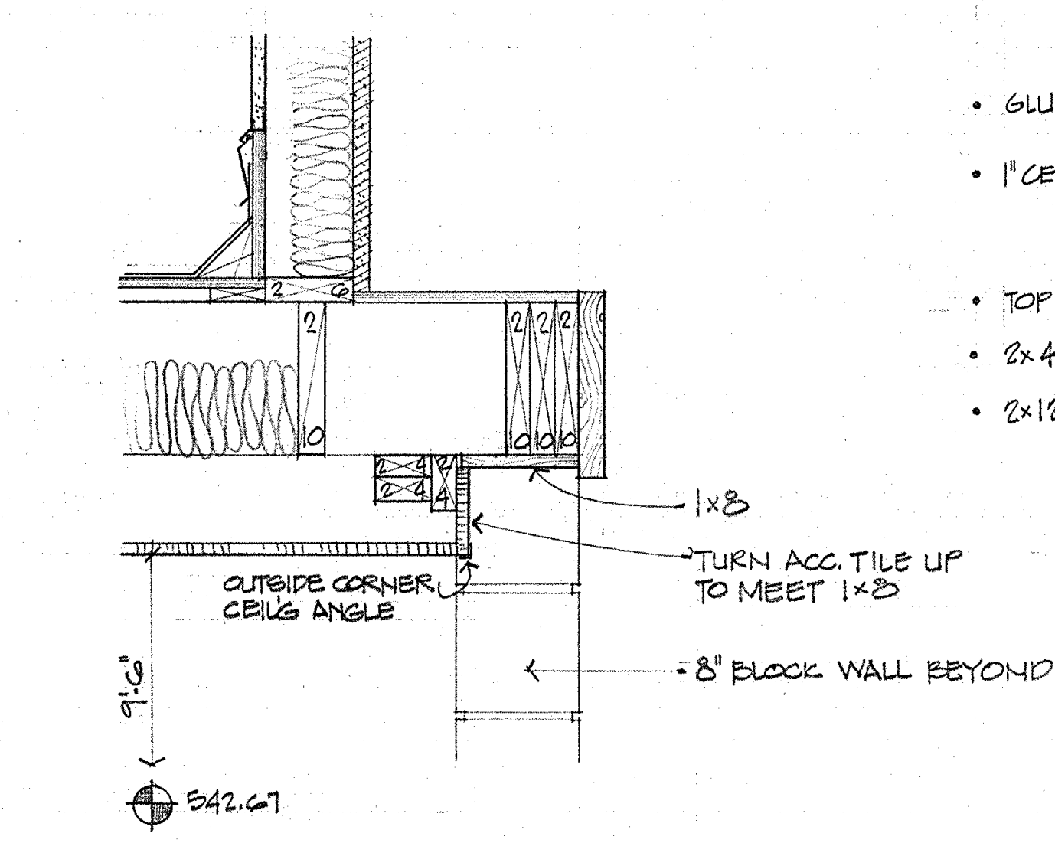
1x8
TURN ACC. TILE UP TO MEET 1x8
OUTSIDE CORNER CEIL'G ANGLE
8" BLOCK WALL BEYOND
9'-6"
542.67

4 21 FRAMING AT ENTRIES NORTH GYM WALL 1" = 1'-0"

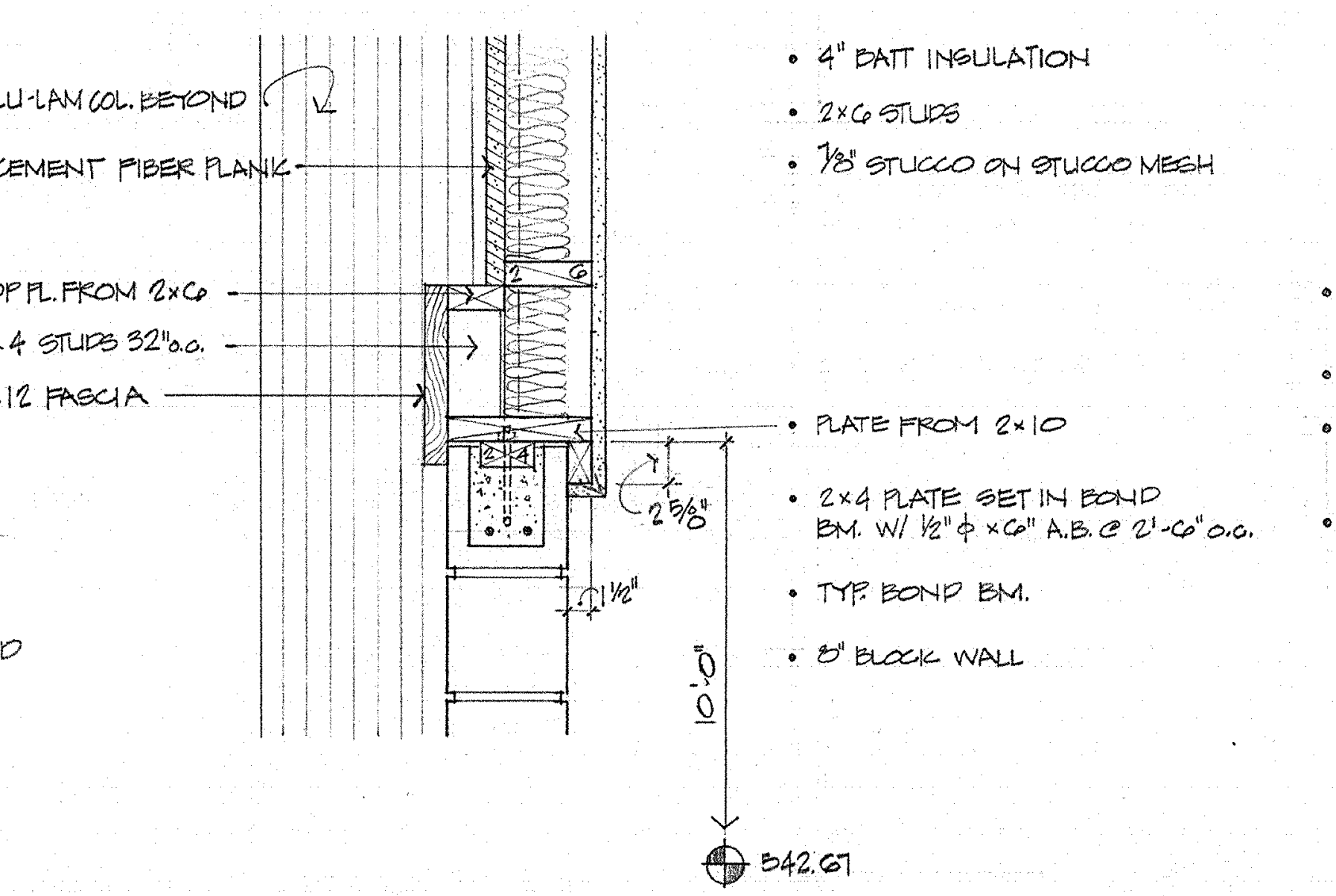
• GLU-LAM COL. BEYOND
• 1" CEMENT FIBER PLANK
• TOP PL. FROM 2x6
• 2x4 STUDS 32" o.c.
• 2x12 FASCIA
• 4" BATT INSULATION
• 2x6 STUDS
• 7/8" STUCCO ON STUCCO MESH
• PLATE FROM 2x10
2⅝"
1½"
• 2x4 PLATE SET IN BOND BM. W/ 1/2" ϕ x 6" A.B. @ 2'-6" o.c.
• TYP. BOND BM.
• 8" BLOCK WALL
10'-0"
542.67

5 21 STUD WALL TO MASONRY WALL - TYPICAL CONN. DETAIL 1" = 1'-0"

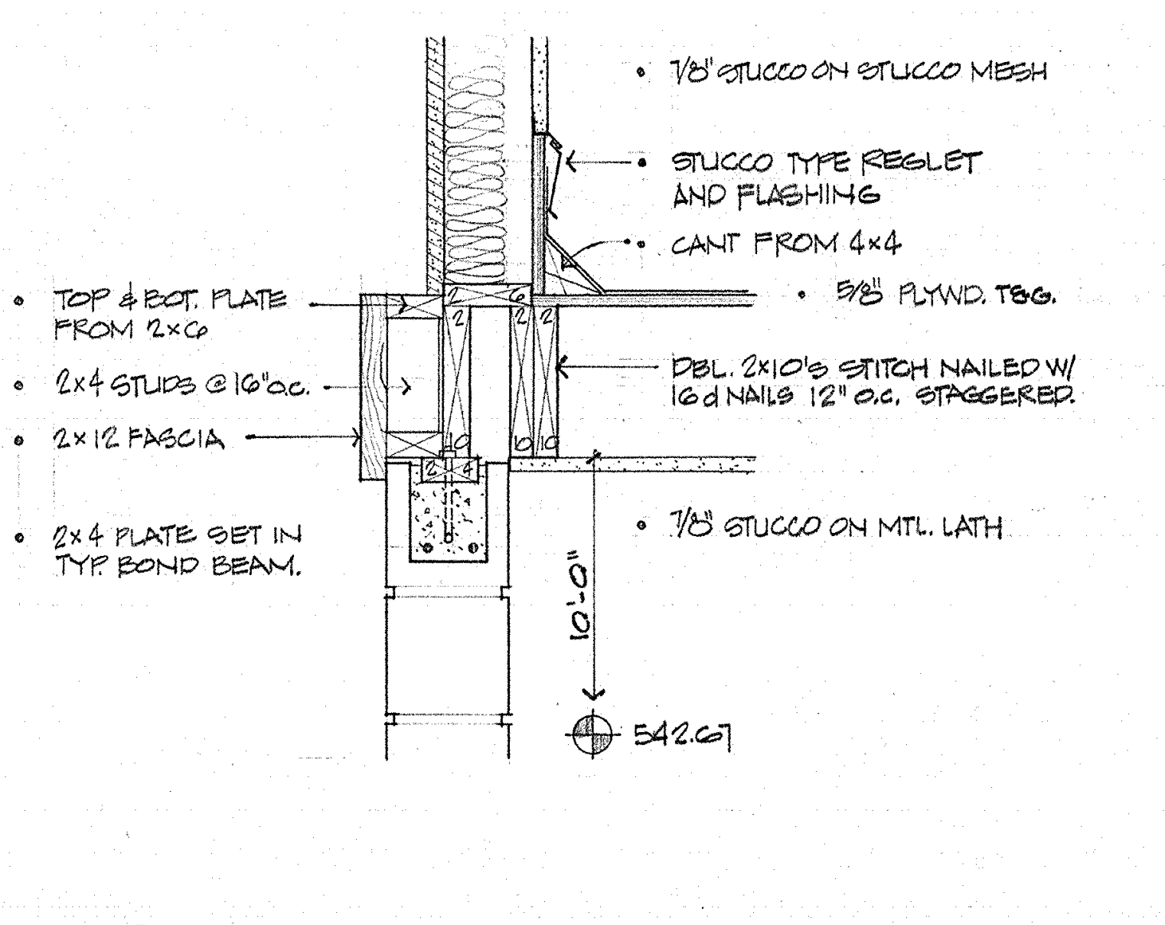
• 7/8" STUCCO ON STUCCO MESH
• STUCCO TYPE REGLET AND FLASHING
• CANT FROM 4x4
• 5/8" PLYWD. T&G.
• TOP & BOT. PLATE FROM 2x6
• 2x4 STUDS @ 16" o.c.
• DBL. 2x10's STITCH NAILED W/ 16d NAILS 12" o.c. STAGGERED.
• 2x12 FASCIA
• 7/8" STUCCO ON MTL. LATH
• 2x4 PLATE SET IN TYP. BOND BEAM.
10'-0"
542.67

6 21 STUD WALL TO MASONRY DTL. EAST WALL @ COVERED WALK 1" = 1'-0"

SECTIONS, DETAILS - SECTOR D

SWEET HOME HIGH SCHOOL
ADDITIONS AND ALTERATIONS 1974
DISTRICT 55 LINN COUNTY, OREGON

ARCHITECTS
HAMLIN, MARTIN,
SCHULTZ & GEYER
159 W. 12TH EUGENE, OREGON 97401

AIA

A
21
JOB NO.

CLARE K. HAMLIN
Clare K Hamlin
EUGENE, OREGON

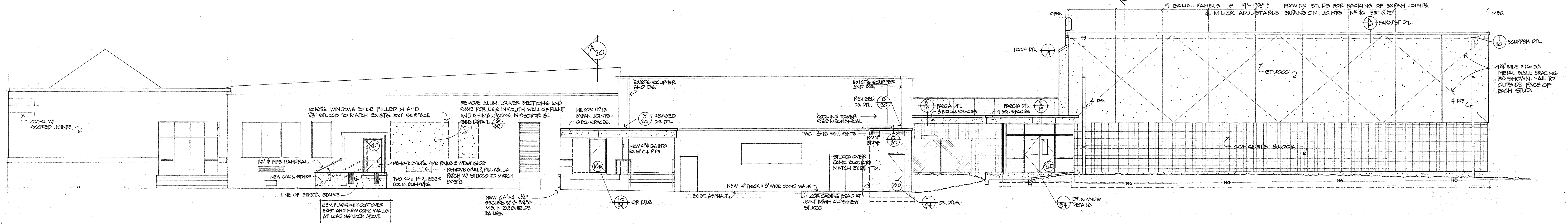
CONC. W/ SCORED JOINTS
EXISTG. WINDOWS TO BE FILLED IN AND 7/8" STUCCO TO MATCH EXISTG. EXT. SURFACE
REMOVE ALUM. LOUVER SECTIONS AND SAVE FOR USE IN SOUTH WALL OF PLANT AND ANIMAL ROOMS IN SECTOR E. SEE DETAIL 6/35
14D
1 1/4" ϕ PIPE HANDRAIL
NEW CONC. STAIRS
REMOVE EXISTG. PIPE RAILS @ WEST SIDE
REMOVE GRILLE, FILL WALL & PATCH W/ STUCCO TO MATCH EXISTG.
TWO 24" x 11" RUBBER DOCK BUMPERS.
LINE OF EXISTG. STAIRS
CEM. PLAS SKIM COAT OVER EXIST AND NEW CONC WALLS AT LOADING DOCK ABOVE
NEW ∠4"x4"x1/4" SECURE W/ 2- 3/4"ϕ M.B. IN EXP. SHIELDS EA. LEG.
A 20
MILCOR № 15 EXPAN. JOINTS - 6 EQ. SPACES.
EXISTG SCUPPER AND D.S.
3/20 REVISED D.S. DTL.
NEW 4"ϕ D.S. INTO EXIST C.I. PIPE
10D
10/34 DR. DTLS.
EXIST. ASPHALT
NEW 4" THICK x 3' WIDE CONC. WALK
EXISTG SCUPPER AND D.S.
REVISED D.S. DTL. 5/20
COOLING TOWER SEE MECHANICAL
TWO 8"x16" WALL VENTS
ROOF EDGE 8/20
STUCCO OVER CONC. BLOCK TO MATCH EXIST.
MILCOR CASING BEAD AT JOINT BTWN OLD & NEW STUCCO
15D
9/34 DR. DTLS.
3/19 FASCIA DTL. 3 EQUAL SPACES
FASCIA DTL. 2/19 4 EQ. SPACES
22D
1/34 DR. & WNDW DETAILS
A 21
O.F.S.
9 EQUAL PANELS @ 9'-1 7/8" ± PROVIDE STUDS FOR BACKING OF EXPAN. JOINTS. & MILCOR ADJUSTABLE EXPANSION JOINTS № 40 SET @ 1/2"
12/19 PARAPET DTL.
ROOF DTL. 11/19
1/20 SCUPPER DTL.
STUCCO
1 1/4" WIDE x 16 GA. METAL WALL BRACING AS SHOWN. NAIL TO OUTSIDE FACE OF EACH STUD.
4" D.S.
CONCRETE BLOCK
NG

1 | 22 WEST ELEVATION
SECTOR D
1/8"=1'-0"

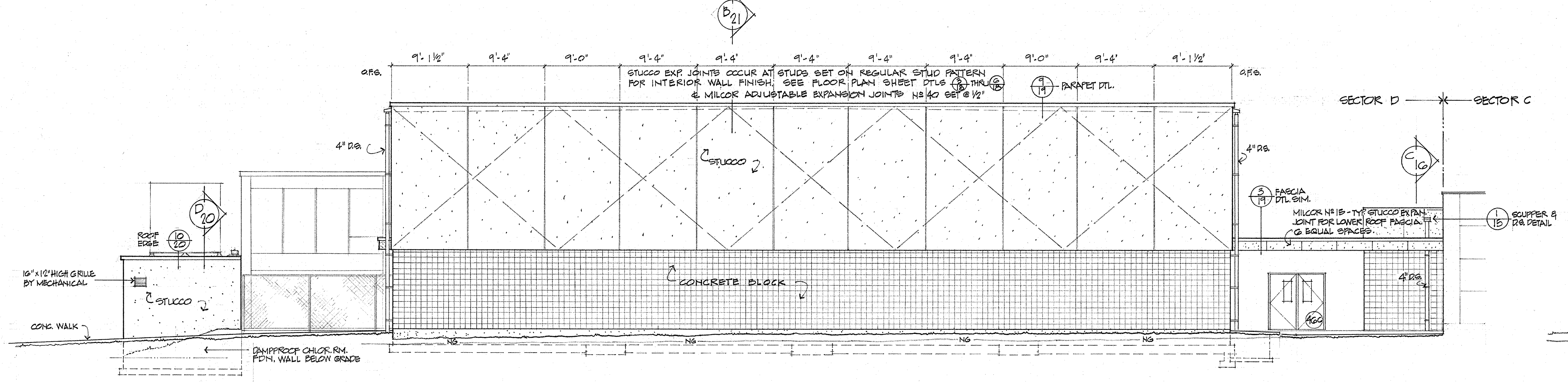
B 21
9'-1 1/2"
9'-4"
9'-0"
9'-4"
9'-4"
9'-4"
9'-4"
9'-4"
9'-0"
9'-4'
9'-1 1/2"
O.F.S.
STUCCO EXP. JOINTS OCCUR AT STUDS SET ON REGULAR STUD PATTERN FOR INTERIOR WALL FINISH. SEE FLOOR PLAN SHEET DTLS 3/18 THRU 6/18 & MILCOR ADJUSTABLE EXPANSION JOINTS № 40 SET @ 1/2"
9/19 PARAPET DTL.
4" D.S.
STUCCO
CONCRETE BLOCK
D 20
ROOF EDGE 10/20
16" x 12" HIGH GRILLE BY MECHANICAL
STUCCO
CONC. WALK
DAMPPROOF CHLOR. RM. FDN. WALL BELOW GRADE
NG
SECTOR D
SECTOR C
C 16
3/19 FASCIA DTL. SIM.
MILCOR № 15 - TYP. STUCCO EXPAN. JOINT FOR LOWER ROOF FASCIA. 6 EQUAL SPACES.
1/15 SCUPPER & D.S. DETAIL
46C

2 | 22 SOUTH ELEVATION
SECTOR D
1/8"=1'-0"

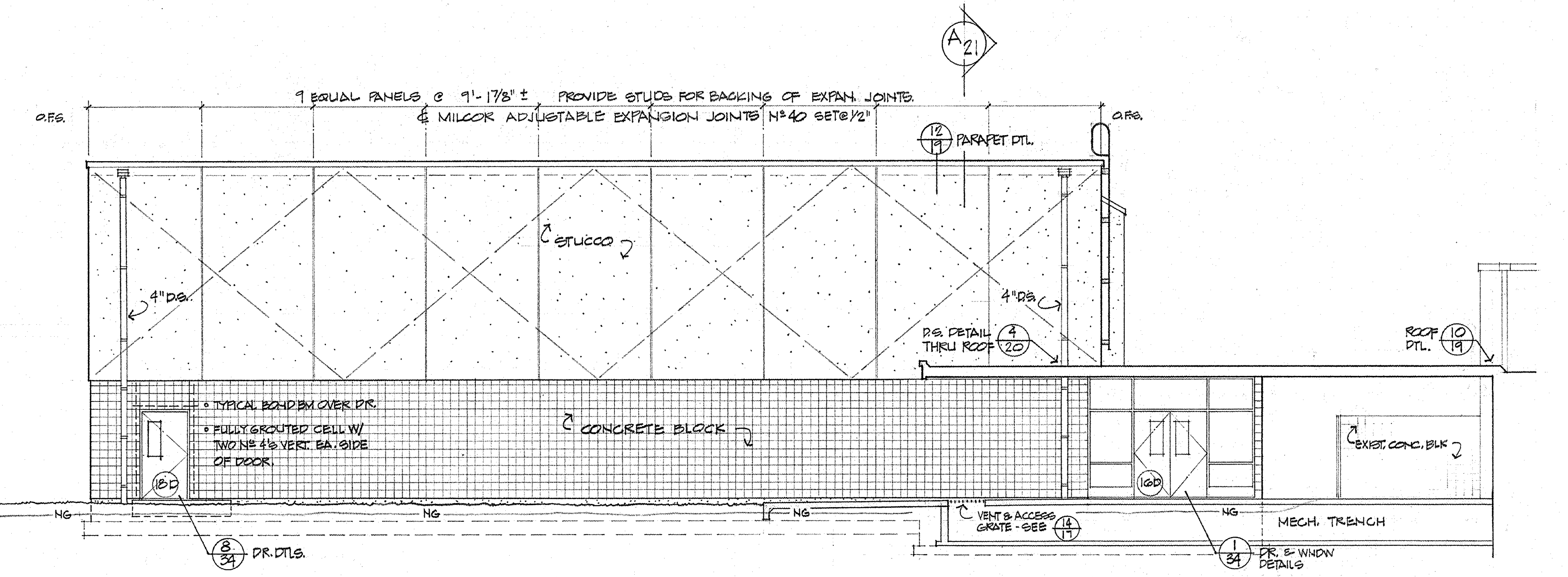
A 21
O.F.S.
9 EQUAL PANELS @ 9'-1 7/8" ± PROVIDE STUDS FOR BACKING OF EXPAN. JOINTS. & MILCOR ADJUSTABLE EXPANSION JOINTS № 40 SET @ 1/2"
12/19 PARAPET DTL.
STUCCO
4" D.S.
D.S. DETAIL THRU ROOF 4/20
ROOF DTL. 10/19
TYPICAL BOND BM OVER DR.
FULLY GROUTED CELL W/ TWO № 4'S VERT. EA. SIDE OF DOOR.
CONCRETE BLOCK
EXIST. CONC. BLK
18D
16D
NG
VENT & ACCESS GRATE - SEE 14/17
MECH. TRENCH
8/34 DR. DTLS.
1/34 DR. & WNDW DETAILS

3 | 22 EAST ELEVATION - P.E. GYMNASIUM
SECTOR D
1/8"=1'-0"

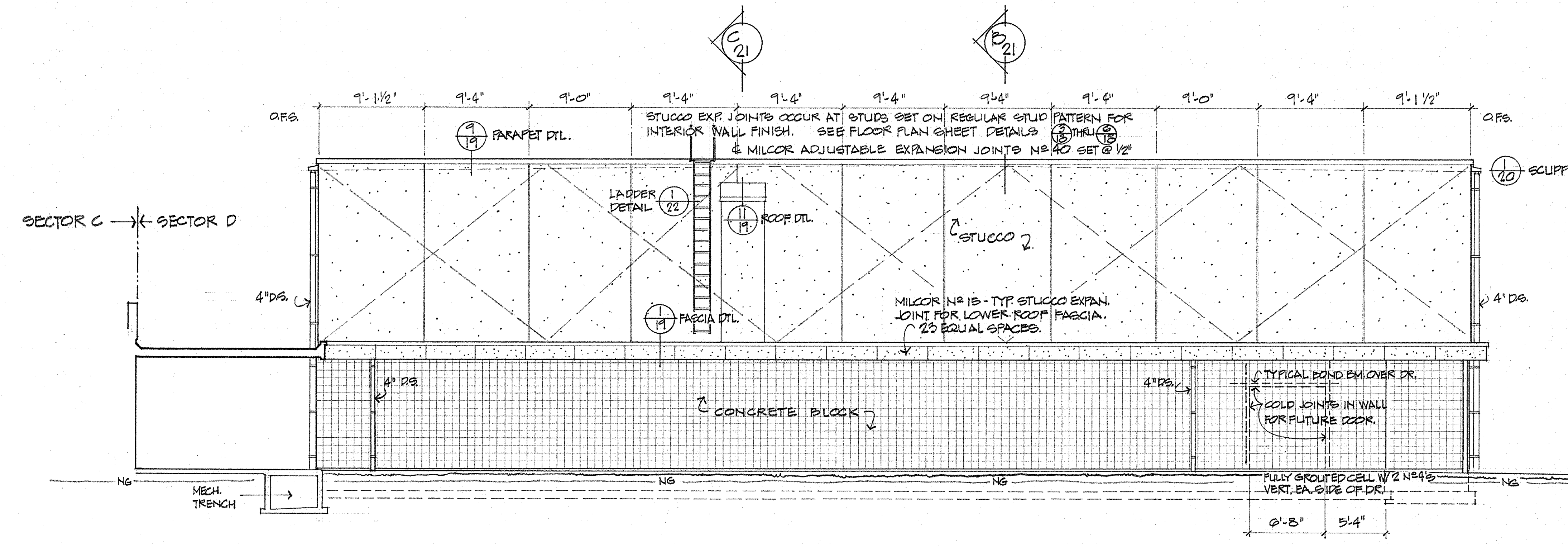
C 21
B 21
9'-1 1/2"
9'-4"
9'-0"
9'-4"
9'-4"
9'-4"
9'-4"
9'-4"
9'-0"
9'-4"
9'-1 1/2"
O.F.S.
STUCCO EXP. JOINTS OCCUR AT STUDS SET ON REGULAR STUD PATTERN FOR INTERIOR WALL FINISH. SEE FLOOR PLAN SHEET DETAILS 3/18 THRU 6/18 & MILCOR ADJUSTABLE EXPANSION JOINTS № 40 SET @ 1/2"
9/19 PARAPET DTL.
1/20 SCUPPER DTL.
SECTOR C
SECTOR D
LADDER DETAIL 1/22
11/19 ROOF DTL.
STUCCO
4" D.S.
1/19 FASCIA DTL.
MILCOR № 15 - TYP. STUCCO EXPAN. JOINT FOR LOWER ROOF FASCIA. 23 EQUAL SPACES.
CONCRETE BLOCK
TYPICAL BOND BM. OVER DR.
COLD JOINTS IN WALL FOR FUTURE DOOR.
FULLY GROUTED CELL W/ 2 № 4'S VERT. EA. SIDE OF DR.
NG
MECH. TRENCH
6'-8"
5'-4"

4 | 22 NORTH ELEVATION - P.E. GYMNASIUM
SECTOR D
1/8"=1'-0"

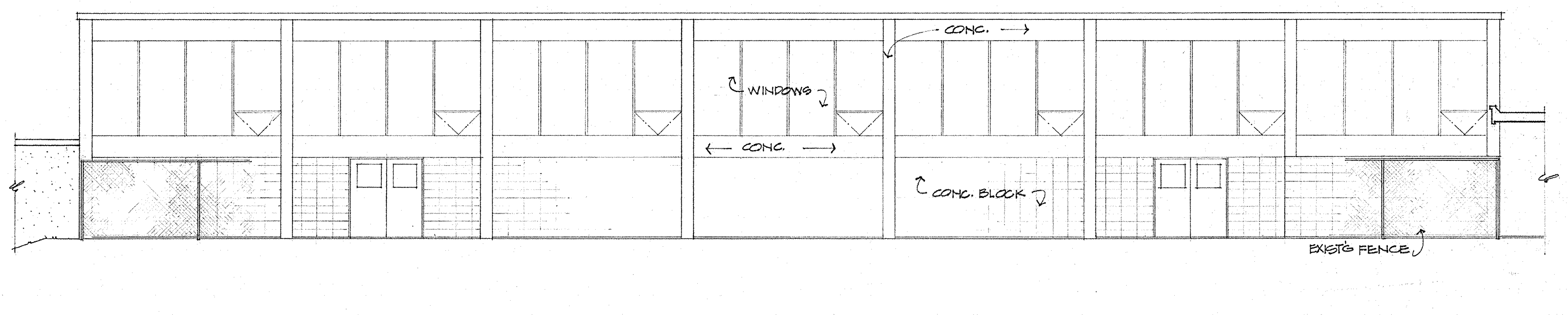
CONC.
WINDOWS
CONC.
CONC. BLOCK
EXISTG FENCE

5 | 22 SOUTH ELEVATION - EXISTING SWIMMING POOL BUILDING
SECTOR D
1/8"=1'-0"

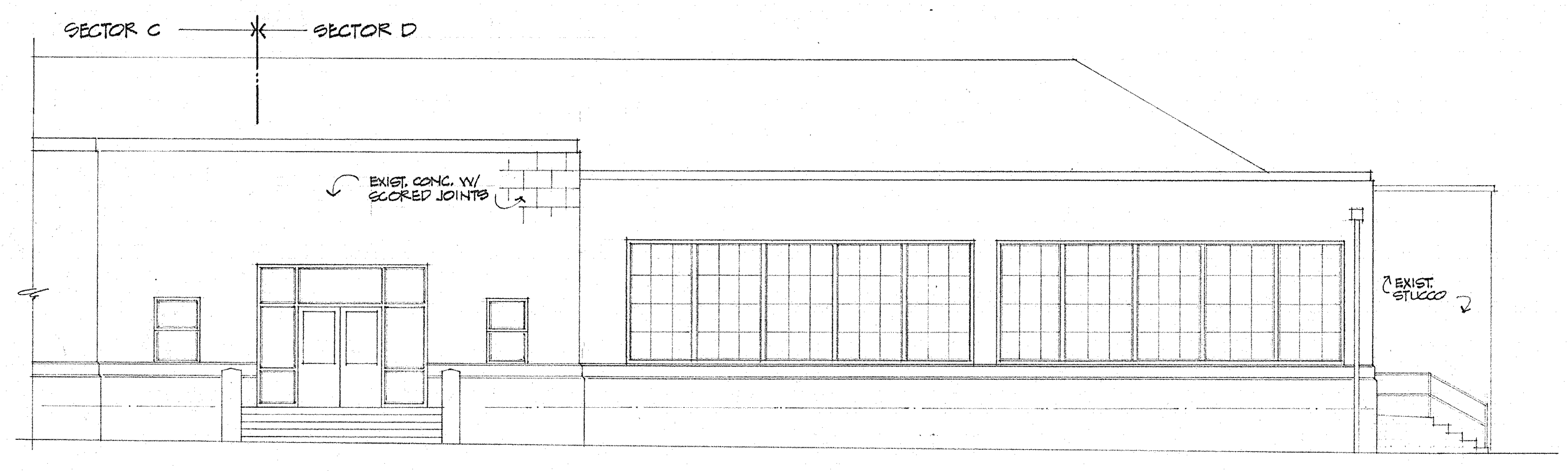
SECTOR C
SECTOR D
EXIST. CONC. W/ SCORED JOINTS
EXIST. STUCCO

6 | 22 NORTH ELEVATION - EXISTING BUILDING
SECTOR D
1/8"=1'-0"

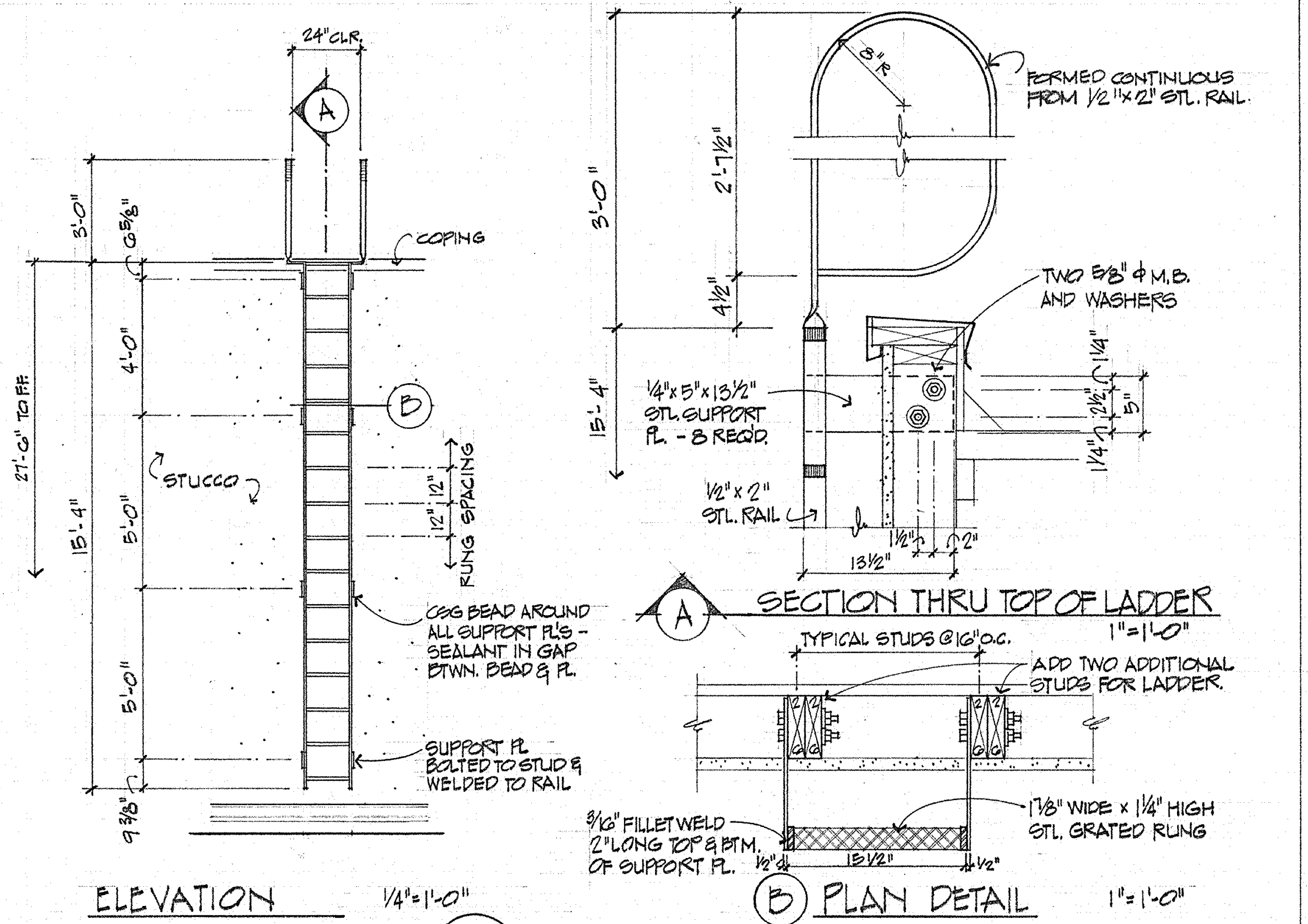
24" CLR.
A
3'-0"
6 5/8"
COPING
27'-6" TO F.F.
15'-4"
4'-0"
5'-0"
5'-0"
9 3/8"
B
STUCCO
12"
12"
RUNG SPACING
CSG BEAD AROUND ALL SUPPORT PL'S - SEALANT IN GAP BTWN. BEAD & PL.
SUPPORT PL BOLTED TO STUD & WELDED TO RAIL
8"R
FORMED CONTINUOUS FROM 1/2" x 2" STL. RAIL.
3'-0"
2'-7 1/2"
4 1/2"
15'-4"
TWO 5/8" ϕ M.B. AND WASHERS
1/4" x 5" x 13 1/2" STL. SUPPORT PL. - 8 REQ'D.
1/2" x 2" STL. RAIL
1 1/4"
2 1/2"
5"
1 1/4"
1 1/2"
2"
13 1/2"
TYPICAL STUDS @ 16" O.C.
ADD TWO ADDITIONAL STUDS FOR LADDER.
3/16" FILLET WELD 2" LONG TOP & BTM. OF SUPPORT PL.
1/2"
15 1/2"
1/2"
1 7/8" WIDE x 1 1/4" HIGH STL. GRATED RUNG

ELEVATION 1/4"=1'-0"

A SECTION THRU TOP OF LADDER 1"=1'-0"

B PLAN DETAIL 1"=1'-0"

1 | 22 P.E. GYMNASIUM LADDER DETAILS

EXTERIOR ELEVATIONS - SECTOR D

SWEET HOME HIGH SCHOOL
ADDITIONS AND ALTERATIONS 1974
DISTRICT 55 LINN COUNTY, OREGON

ARCHITECTS
HAMLIN, MARTIN, SCHULTZ & GEYER
AIA
159 W. 12TH EUGENE, OREGON 97401

A
22
JOB NO.

REGISTERED ARCHITECT
CLARE K. HAMLIN
Clare Hamlin
EUGENE, OREGON
STATE OF OREGON

102'-8"
34'-4"
34'-0"
12'-9"
A 27
31'-11⅛"
EXISTING ½"⌀ IRON ROD ALONG BASE LINE
INTERSECTION OF EXTENSION OF @ FACE OF WALL AND BASE LINE
8°14'-00"
81°46'
BASE LINE
4" DS.
COLD JOINT
SOUTH FACE OF STUD WALL
COL FTG (TYP 8 PLACES)
4 TYP ARCADE COL. FTG.
FOUR #5's x 6'-0" PLACED IN SLAB ACROSS FOOTING (TYP. 8 PLACES)
SOUTH FACE OF STUD WALLS
PIT SAME AS AT LIBRARY BLDG. BELOW RAD E12-E13
PIT
1'-0" x 3'-4" x 2'-6" DEEP PIT W/ 2" UNREINF CONC FLOOR. COORDINATE W/ MECH. (THREE PLACES)
INT. WALL FTG.
4" CONC. SLAB (ELEV. 544.0')
6x6 6/6 W.W.F.
2" SAND LEVELING COURSE
VAPOR BARRIER
4" GRAVEL BASE
2'-2" x 2'-8" x 2'-0" DEEP PIT W/ 6" WALL W/ 6x6 6/6 W.W.F. 2" UNREINF CONC. FLOOR. ALIGN W/ STUD WALL CHASE ABOVE. COORDINATE W/ MECH.
2'-0" x 1'-8" x 1'-0" DEEP PIT W/ 6" EAST & SOUTH WALLS W/ 6x6 6/6 W.W.F. 2" UNREINF CONC FLOOR COORDINATE W/ MECH
TYP. PERIMETER FOOTING.
PERIMETER FOOTING
TYPICAL HOLD WALL DOWN 4" TO BTM OF SLAB @ AREAS SHOWN WITHOUT POCHE. SEE DOOR AND WINDOW DTLS FOR POSITION OF SLAB EDGE
TYP ARCADE FOOTING
D 27
B 27
C 27
E 27
F 27
& COLUMN
37'-7"
O.F. FOUND.
O.F. FOUND.
142'-8"
127'-4"
33'-4"
30'-0"
1/8" = 1'-0"
N

FOUNDATION PLAN
SECTOR E

1/8" = 1'-0"

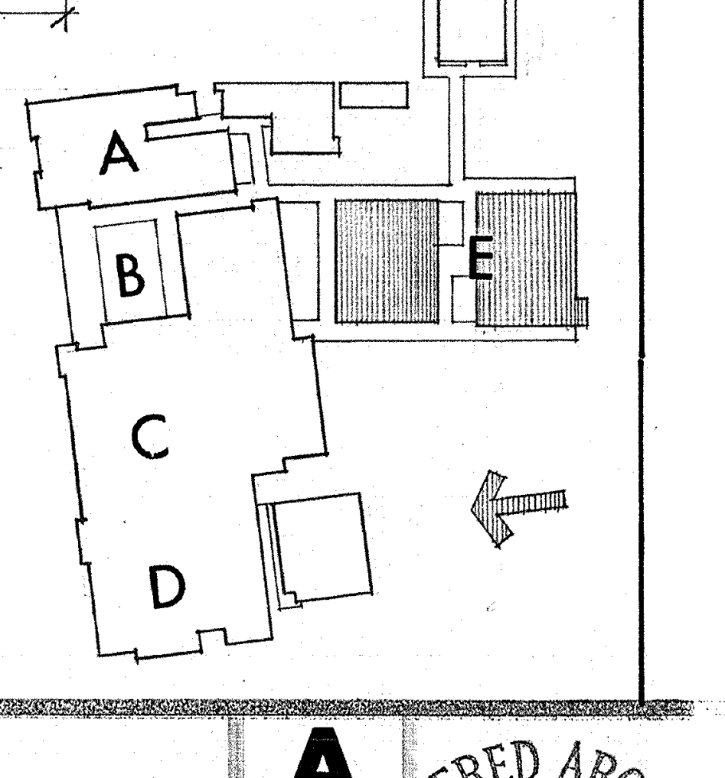

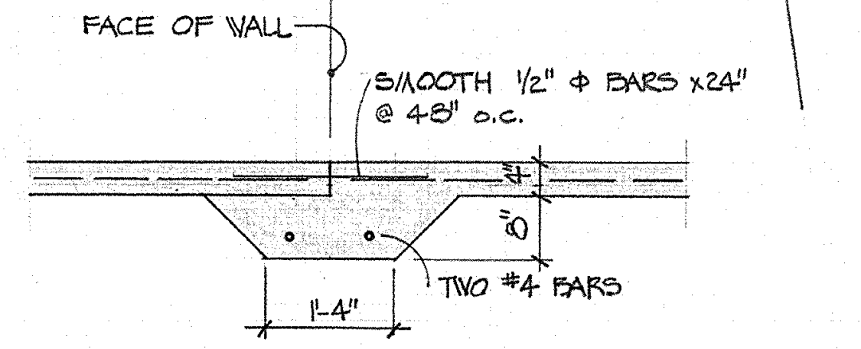
FACE OF WALL
SMOOTH ½" ⌀ BARS x24" @ 48" o.c.
4"
8"
1'-4"
TWO #4 BARS

1A/23 COLD JOINT @ INTERIOR SLABS

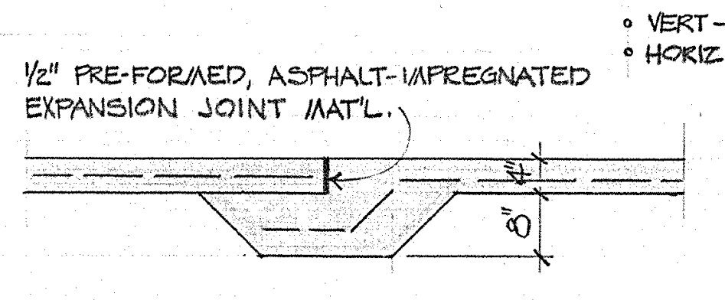
½" PRE-FORMED, ASPHALT-IMPREGNATED EXPANSION JOINT MAT'L.
4"
8"

1B/23 CONTROL JOINT @ EXTERIOR SLABS

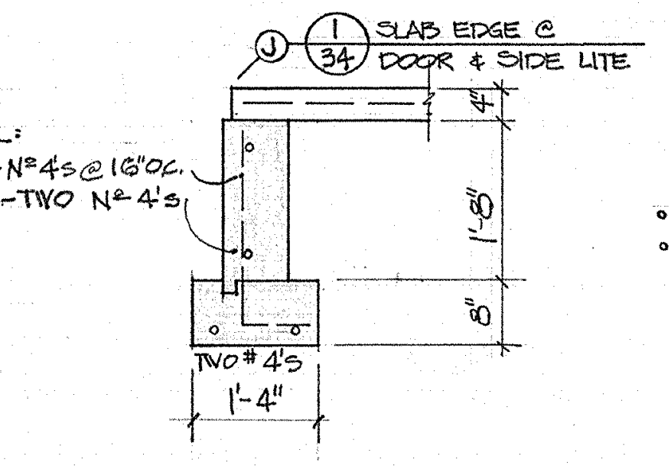
J
1/34 SLAB EDGE @ DOOR & SIDE LITE
TYP. STL:
VERT - Nº 4's @ 16" O.C.
HORIZ - TWO Nº 4's
4"
1'-8"
8"
TWO #4's
1'-4"

2/23 FTG @ ENTRY DOORS

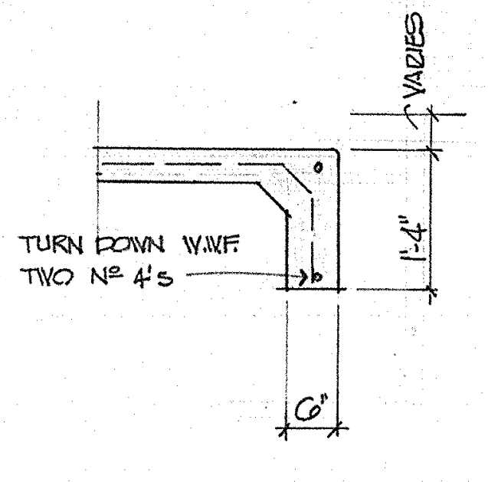
VARIES
TURN DOWN W.W.F.
TWO Nº 4's
1'-4"
6"

3/23 SLAB EDGE ½"=1'-0"

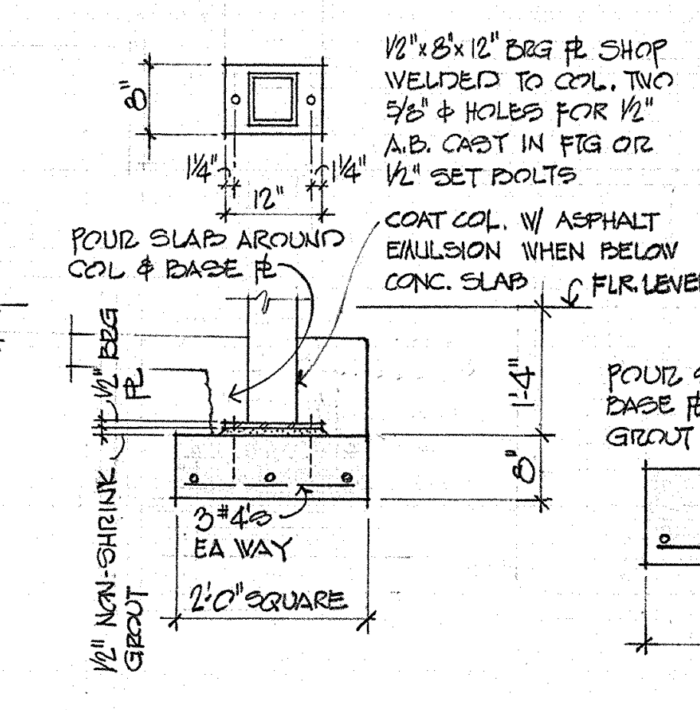
½" x 8" x 12" BRG ℞ SHOP WELDED TO COL. TWO 5/8" ⌀ HOLES FOR ½" A.B. CAST IN FTG OR ½" SET BOLTS
8"
1¼"
12"
1¼"
POUR SLAB AROUND COL & BASE ℞
COAT COL. W/ ASPHALT EMULSION WHEN BELOW CONC. SLAB
FLR. LEVEL
½" BRG ℞
½" NON-SHRINK GROUT
1'-4"
8"
3 #4's EA WAY
2'-0" SQUARE

4/23 ARCADE COL FTG ½"=1'-0"

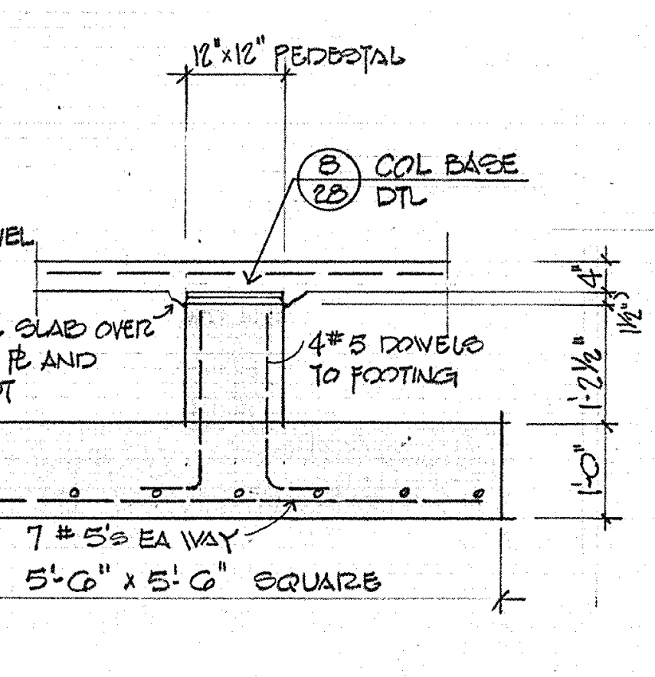
12"x12" PEDESTAL
8/28 COL BASE DTL
POUR SLAB OVER BASE ℞ AND GROUT
4 #5 DOWELS TO FOOTING
4"
1'-2½"
1'-0"
7 #5's EA WAY
5'-6" x 5'-6" SQUARE

5/23 COLUMN FOOTING ½"=1'-0"

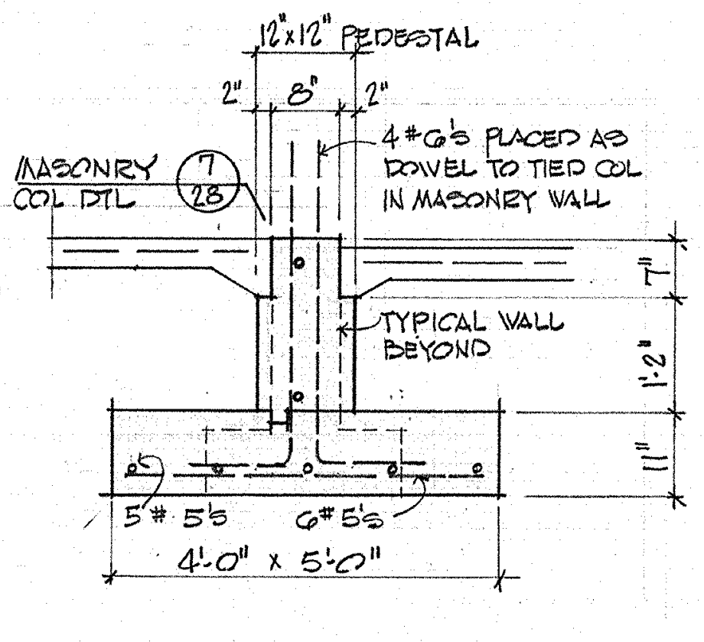
12"x12" PEDESTAL
2"
8"
2"
MASONRY COL DTL 7/28
4 #6's PLACED AS DOWEL TO TIED COL IN MASONRY WALL
TYPICAL WALL BEYOND
4"
1'-2"
11"
5 #5's
6 #5's
4'-0" x 5'-0"

6/23 MASONRY COL FTG IN WALL ½"=1'-0"

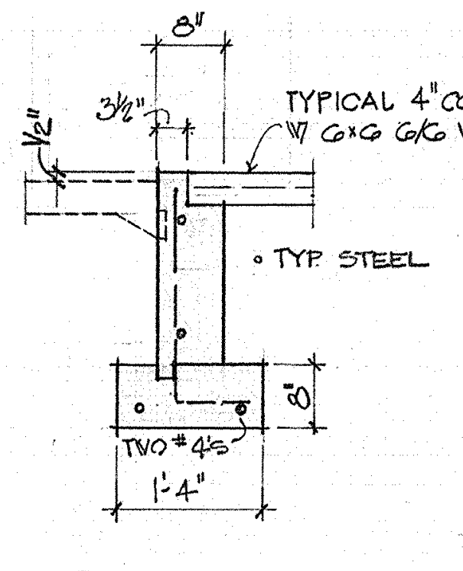
8"
½"
3½"
TYPICAL 4" CONC SLAB W/ 6x6 6/6 W.W.F.
TYP. STEEL
8"
TWO #4's
1'-4"

7/23 FTG @ EXT. WD STUD WALL

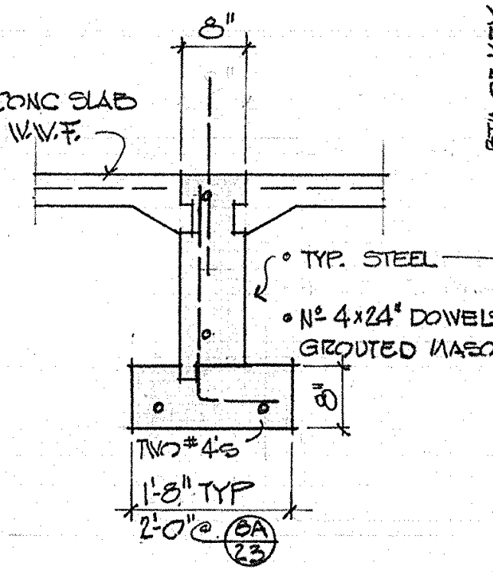
8"
TYP. STEEL
Nº 4x24" DOWELS TO GROUTED MASONRY CELLS
8"
TWO #4's
1'-8" TYP
2'-0" @ 8A/23

8/23 INTERIOR WALL FTG

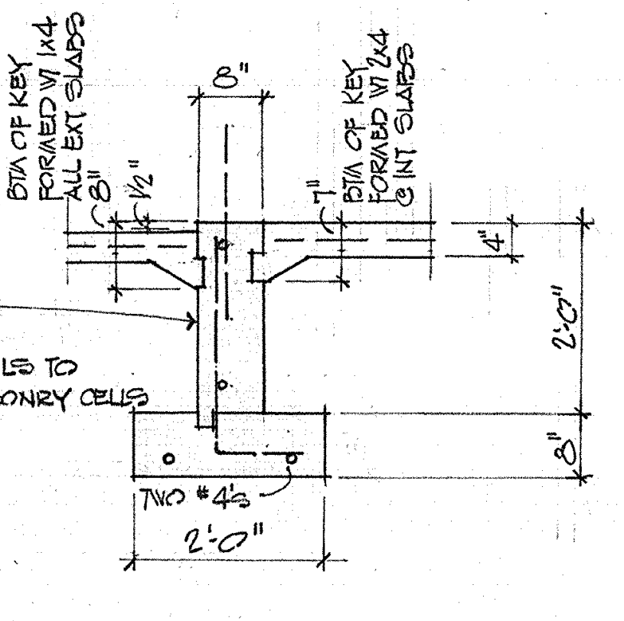
BTM OF KEY FORMED W/ 1x4 ALL EXT SLABS
8"
½"
BTM OF KEY FORMED W/ 2x4 @ INT SLABS
8"
4"
2'-0"
8"
TWO #4's
2'-0"

9/23 TYP PERIMETER FOOTING ½"=1'-0"

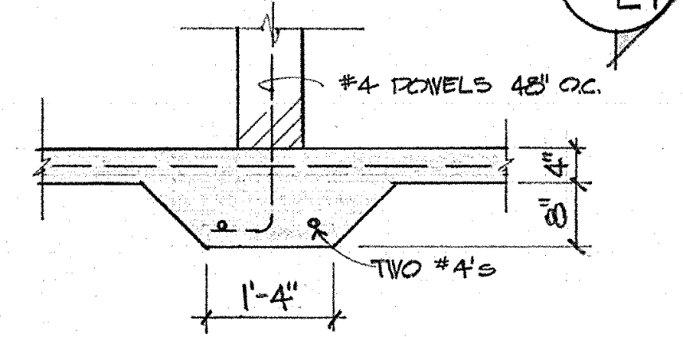
#4 DOWELS 48" O.C.
4"
8"
1'-4"
TWO #4's

10/23 THICKENED SLAB DTL ½"=1'-0"

FOUNDATION PLAN & DETAILS - SECTOR E

SWEET HOME HIGH SCHOOL
ADDITIONS AND ALTERATIONS 1974
DISTRICT 55 LINN COUNTY, OREGON

ARCHITECTS
HAMLIN, MARTIN,
SCHULTZ & GEYER
AIA
159 W. 12TH EUGENE, OREGON 97401

A
23
JOB NO.

CLARE K. HAMLIN
Clare K Hamlin
EUGENE, OREGON

ENGLISH E1
FOODS E2
CLOTHING E3
CHILD CARE E4
HOMEMAKING E7
LAUNDRY E8
STORAGE
OFFICE
TOILET
SPECIAL EDUC E11
GIRLS E12
BOYS E15
ARCH RM ABOVE
CONF E16
LIBRARY E17
MATH E18
OFFICE E20
WORK ROOM E21
AUDIO VISUAL E22
GENERAL BUS E24
BOOKKEEPING E25
MODEL OFFICE E26
TYPING ROOM E27
BUSINESS MACHINES E28
MATH WORK CENTER E32
MATH ROOM E33
MATH ROOM E34
CORRIDOR E36
GENERAL SCIENCE E37
FILE E39
WORK RM E41
HALL
MATH ROOM E42
CHEM STO
STUDENT LAB & RESOURCE
PHYSICS & CHEM E47
GENERAL SCIENCE E48
BIOLOGY E49
ANIMAL
PLANTING AREA
CONTROL JOINT
SCORING MARK - TYP. BETWEEN CONTROL JOINTS
BASE LINE
EXISTG ASPHALT WALKWAY
NEW ASPHALT - MATCH ADJ. SURFACES
REMOVE EXISTG CONC SLAB & ROOF DECK
CONNECTION OF EXIST. WALL CARREL UNITS INTO ISLAND UNITS - SEE DTL.
EXISTING WALL CARRELS RELOCATED FROM RESOURCE CENTER
OUTSIDE BOOK DROP
RECESSED IRONING BOARD CABINETS & REQUIRED MOUNT CABINETS 20" ABOVE FLR.
CEILING-MOUNTED DRAPERY TRACK
OVERHEAD PROJECTION SCREEN. VERIFY EXACT MOUNTING POSITION.
ADJ. METAL SHELVING UNITS
5'-0" HIGH CHAIN LINK FENCE
5'-6" WIDE CONC. SLAB
SEE SHT A26 FOR ADD. ALT. E SIDEWALK & ARCADE
102'-8"
110'-8"
142'-8"
@ FACE OF MASONRY

RELOCATED LIBRARY BOOKCASES

TYPE	LENGTH	HEIGHT	DEPTH	TOTAL Nº	REMARKS
A	8'-0"	4'-0"	11¾"	5	MODIFY FACE FRAME *
B	8'-0"	6'-0"	9⅜"	19	" " "
C	6'-0"	6'-0"	9⅜"	6	" " "
D	8'-0"	8'-0"	1'-2"	6	" " "
E	9'-0"	6'-10"	1'-4½"	2	NO MODIFICATION REQ'D

* FOR FACE FRAME MODIFICATION, SEE DETAIL 10/38

FLOOR PLAN
SECTOR E
1/8" = 1'-0"
N

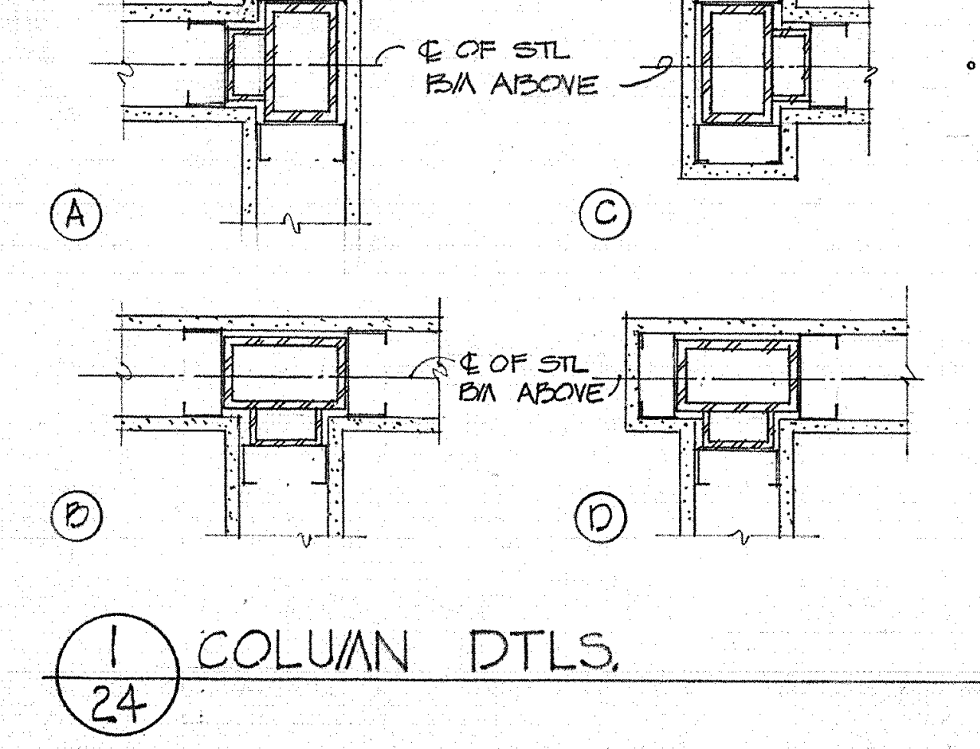
℄ OF STL BM ABOVE
℄ OF STL BM ABOVE
A
B
C
D
E

- TYP. COL. BUILT UP OF TS 5 x 3 x .375 [3 x 6
- STITCH WELD TOGETHER W/ 3/16" FILLET WELDS 1" LONG 12" O.C. EACH SIDE
- 5x5x¼" STL TUBE
- 2 LAYERS GYP. BD. NOT REQ'D WHERE COL. IS IN WALL

1/24 COLUMN DTLS. 1½" = 1'-0"

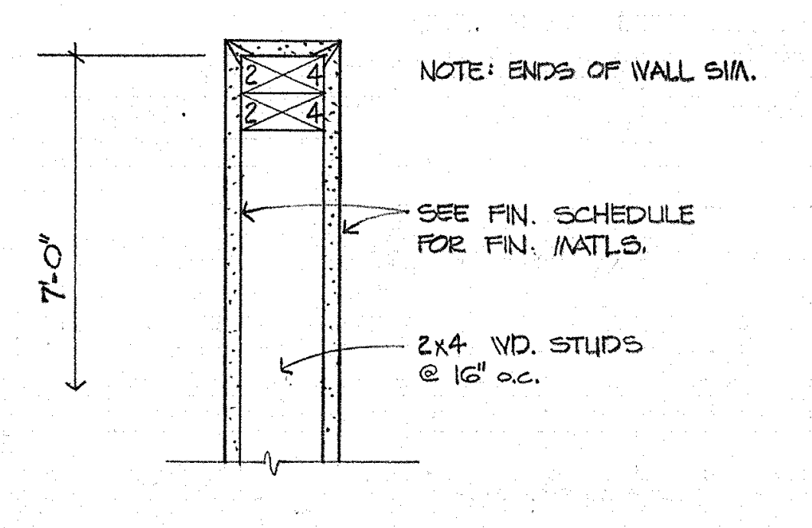
NOTE: ENDS OF WALL SIM.
SEE FIN. SCHEDULE FOR FIN. MATLS.
2x4 WD. STUDS @ 16" O.C.
7'-0"

2/24 PARTIAL HEIGHT PARTITION 1½" = 1'-0"

LEGEND

▭	EXST'G WALL TO REMAIN
▨	NEW WOOD STUD WALL
▥	NEW METAL STUD WALL
▧	NEW NON-BEARING MASONRY WALL
▩	NEW BEARING MASONRY WALL
▤	NEW CONCRETE WALL

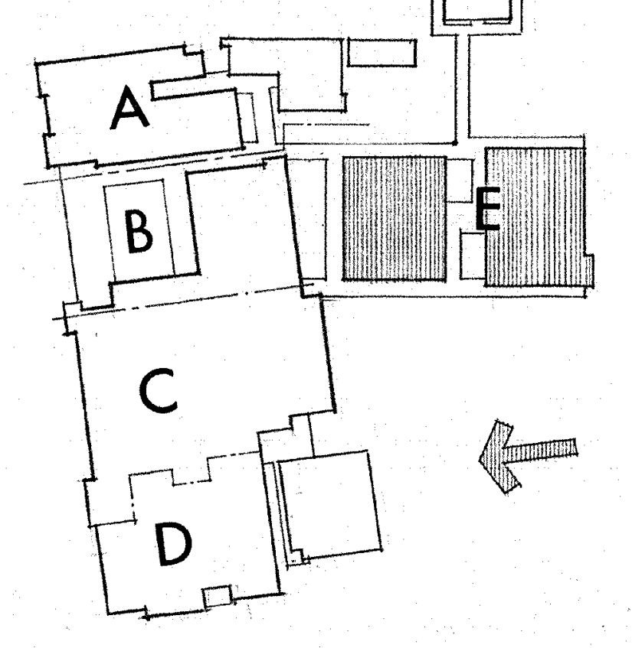

FLOOR PLAN - SECTOR E

SWEET HOME HIGH SCHOOL
ADDITIONS AND ALTERATIONS 1974
DISTRICT 55 LINN COUNTY, OREGON

ARCHITECTS AIA
HAMLIN, MARTIN, SCHULTZ & GEYER
159 W. 12TH EUGENE, OREGON 97401

A
24
JOB NO.

REGISTERED ARCHITECT
CLARE K. HAMLIN
Clare K Hamlin
EUGENE, OREGON
STATE OF OREGON

5x5x3/16" STL ∠'s
○ 3 5/8" MTL STUDS 16"O.C.
○ 10x6x1/4" STL TUBE STRUT
○ 6x6x1/4" STL TUBE COL.
℄ FACE OF MASONRY
CONN. SECONDARY ARCADE ADD. ALTERNATE E
ALTERNATE E STRUT LOCATION
℄ FACE OF MASONRY
1 3/4"
43'-6" LENGTH OF W21x62
1/4"
15'-4" LENGTH OF W12x27
34'-4"
34'-0"
O.F. MASONRY
SEE CEILING & ROOF FRAMING PLAN - SECTOR A, SHEET 5.
6D/28 ARCADE B/M SUPPORT
12/28 ROOF @ SLOPED PERIM. WALL
16/26 PARAPET @ SLOPING ROOF
LINTEL @ LEVEL PERIMETER WALL 1/25
ROOF @ LEVEL PERIMETER WALL 4/25
1'-5 3/8"
3 5/8"
W21x62
W12x27
W6x16
17'-7 1/4"
18'-2 1/2"
B/M SUPPORT IN WALL 7/28
15A/26 STRUTS @ FASCIA
ROOF @ SLOPED PERIMETER WALL 5/28
4/25 PIPE CHASE
PARAPET & SOFFIT @ ENTRY RECESS 18A/26
CONC LINTEL 2/25
STL COL DTL
B/M TO B/M SUPPORT
TRUSS SUPPORT @ STEEL BEAM
TYP. TRUSS SUPPORT @ STEEL BEAM
DRAFTSTOP
DRAFTSTOP (SEE SECTIONS)
SIMILAR
24" ROOF TRUSSES 32" o.c.
20" ROOF TRUSSES 32" o.c.
14" ROOF TRUSSES 32"o.c.
26/28 MECH B/M FLOOR
17/28 LOWER ROOF SUPPORT
D 27
MECH ROOM FLOOR 24/28
LOWER ROOF SUPPORT 15/28
MECH ROOM FLOOR 25/28
LOWER ROOF SUPPORT 16/28
18/28 LOWER ROOF SUPPORT
4x4's 32"o.c. TO ALIGN W/ TRUSSES
JOIST SUPPORT @ BEAM 19/28
LINTEL @ SLOPED PERIMETER WALL 9/26
9/26 LINTEL @ SLOPED PERIMETER WALL
TYPICAL ARCADE BEAMS 10"x6"x1/4" STL TUBES THROUGHOUT EXCEPT 12" DEEP TUBES @ BUS LOADING ARCADE IN 'SECTOR B'
B 27
5/28 ROOF @ SLOPED PERIMETER WALL
PARAPET @ SLOPING ROOF 16/26
C 27
ROOF @ SLOPED PERIM. WALL 12/28
6B/28 ARCADE B/M SUPPORT
3/25 PIPE CHASE
5/25 PIPE CHASE
8/12 ARCADE @ WALL S/M
8/5 TYP. DTL.
5/25
A 27
ROOF FRAMING @ MASONRY WALL 4/28
ROOF FRAMING @ CONC. LINTEL 1/28
17/26 ARCADE FASCIA RETURN
6D/28 ARCADE B/M SUPPORT
7/28 B/M SUPPORT IN WALL
MECH B/M FLOOR
LOWER ROOF SUPPORT
TRUSS SUPPORT @ BEAM
MECH B/M PARAPET
LOWER RF SUPPORT
TRUSSES @ CORRIDOR
2/25 CONC LINTEL
18/26 PARAPET & SOFFIT @ ENTRY RECESS
9/26 PARAPET @ LINTEL @ SLOPING ROOF
16/26 PARAPET @ SLOPING ROOF
F 27
7/28 B/M SUPPORT IN WALL
2/26 SOUTH FASCIA S/M.
4x4x1/4" STL TUBE COL W/ 3/16" CONT. FILLET WELD TO B/M.
2x6 @ 16" o.c.
6x4x3/16" STL. TUBE B/M. CLOSE EAST TUBE END W/ 1/8" STL. PL. SHOP WELD.
4/26 B/M. SUPPORT @ WALL
1/26 SUPPORT @ WALL
E 27
2/26 FASCIA @ SOUTH WALL
2x6 WD JOIST @ 24" o.c.
3A/26 CAP @ MASONRY WALL
3/26 FASCIA @ WEST WALL
17/26 ARCADE FASCIA RETURN
9/26 ARCADE B/M SUPPORT
CONC LINTEL
LINTEL @ LEVEL PERIMETER WALL
ROOF @ LEVEL PERIMETER WALL

ROOF FRAMING PLAN

SECTOR E

1/8" = 1'-0"

N

METAL DECKING	
SPAN	GAUGE
UP TO 12'-10"	20
12'-10" TO 14'-10"	18
14'-10" & OVER	16

- SPANS AND GAUGES PER TABLE ABOVE EXCEPT AS NOTED ON DRAWINGS.
- INSTALL DECKING W/ WIDE RIBS DOWN
- ARC WELD TO STL. SUPPORTS @ 8" o.c. PER SPEC.
- ALL JOINTS TO OCCUR OVER SUPPORTS

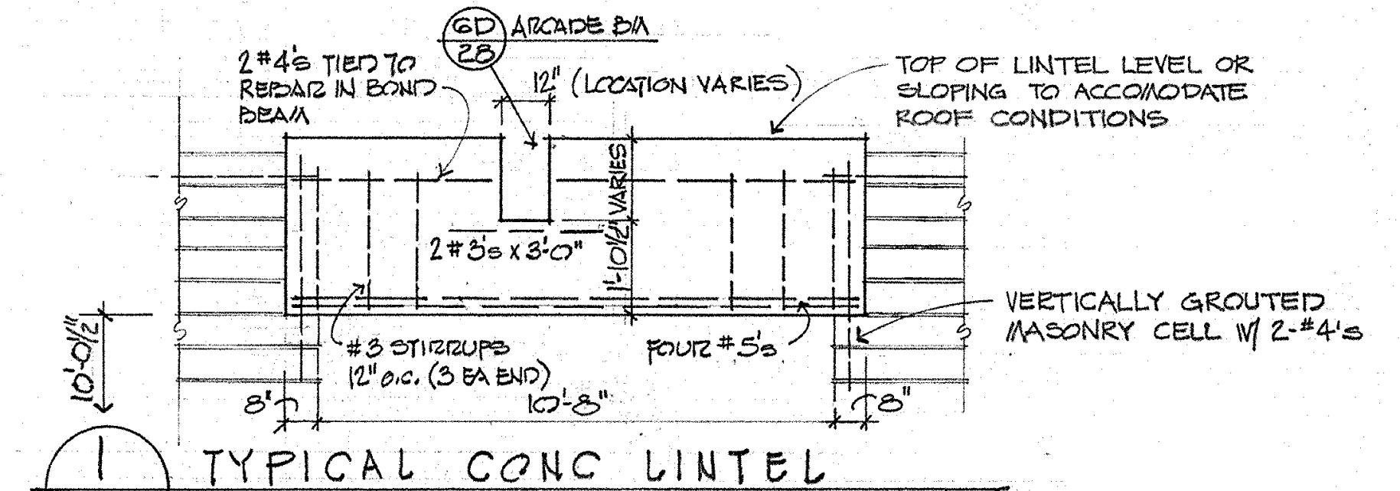
6D/28 ARCADE B/M
2 #4's TIED TO REBAR IN BOND BEAM
12" (LOCATION VARIES)
TOP OF LINTEL LEVEL OR SLOPING TO ACCOMMODATE ROOF CONDITIONS
2 #3's x 3'-0"
1'-10 1/2" VARIES
VERTICALLY GROUTED MASONRY CELL W/ 2-#4's
#3 STIRRUPS 12" o.c. (3 EA END)
FOUR #5's
10'-0 1/2"
8"
10'-8"

1/25 TYPICAL CONC LINTEL 1/4" = 1'-0"

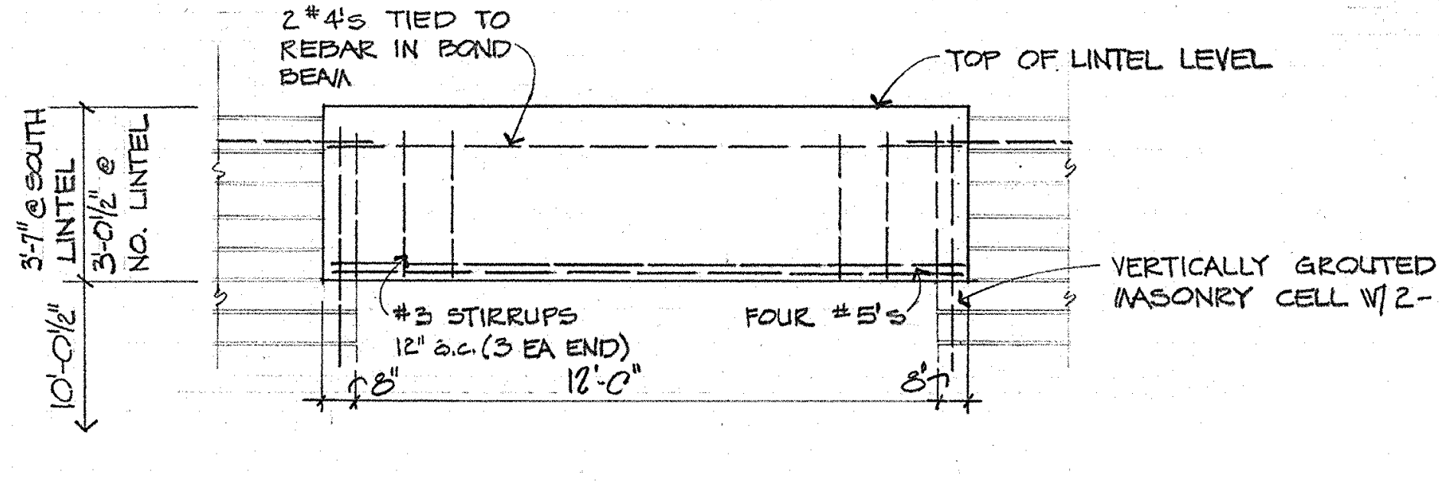
2 #4's TIED TO REBAR IN BOND BEAM
TOP OF LINTEL LEVEL
3'-7" @ SOUTH LINTEL
3'-0 1/2" @ NO. LINTEL
10'-0 1/2"
VERTICALLY GROUTED MASONRY CELL W/ 2-#4's
#3 STIRRUPS 12" o.c. (3 EA END)
FOUR #5's
8"
12'-0"

2/25 CONC LINTEL @ ENTRY TO CORRIDOR

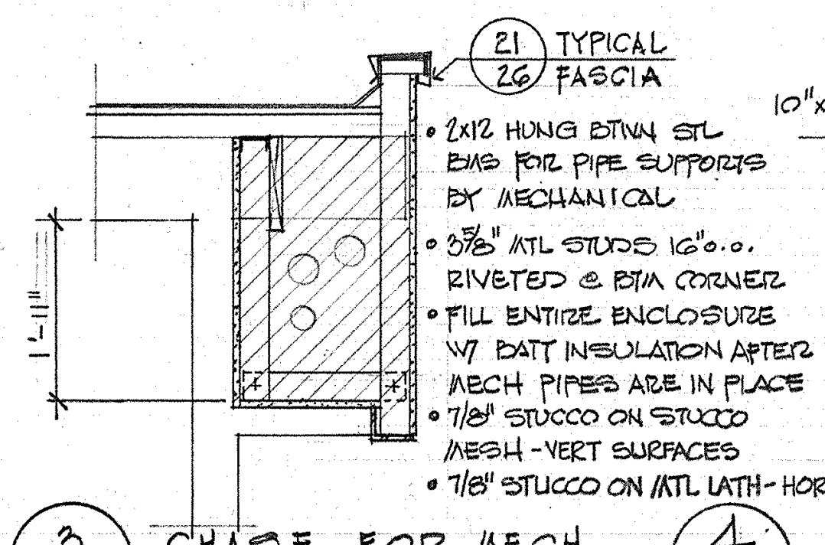
21/26 TYPICAL FASCIA
1'-11"
○ 2x12 HUNG BTWN STL B/MS FOR PIPE SUPPORTS BY MECHANICAL
○ 3 5/8" MTL STUDS 16"o.c. RIVETED @ BTM CORNER
○ FILL ENTIRE ENCLOSURE W/ BATT INSULATION AFTER MECH PIPES ARE IN PLACE
○ 7/8" STUCCO ON STUCCO MESH - VERT SURFACES
○ 7/8" STUCCO ON MTL LATH - HORIZ.

3/25 CHASE FOR MECH PIPING 1/2" = 1'-0"

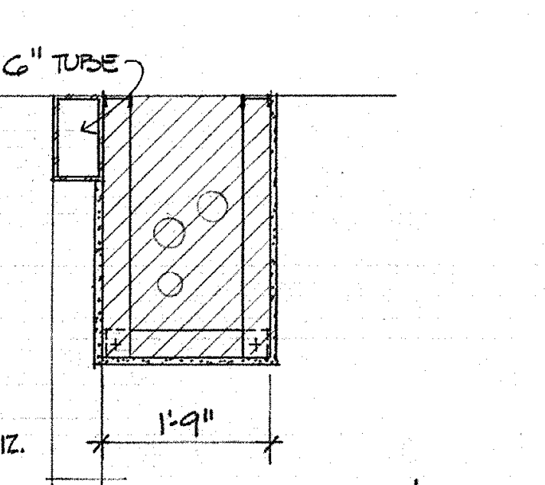
10"x6" TUBE
1'-9"

4/25 CHASE FOR MECH PIPING 1/2" = 1'-0"

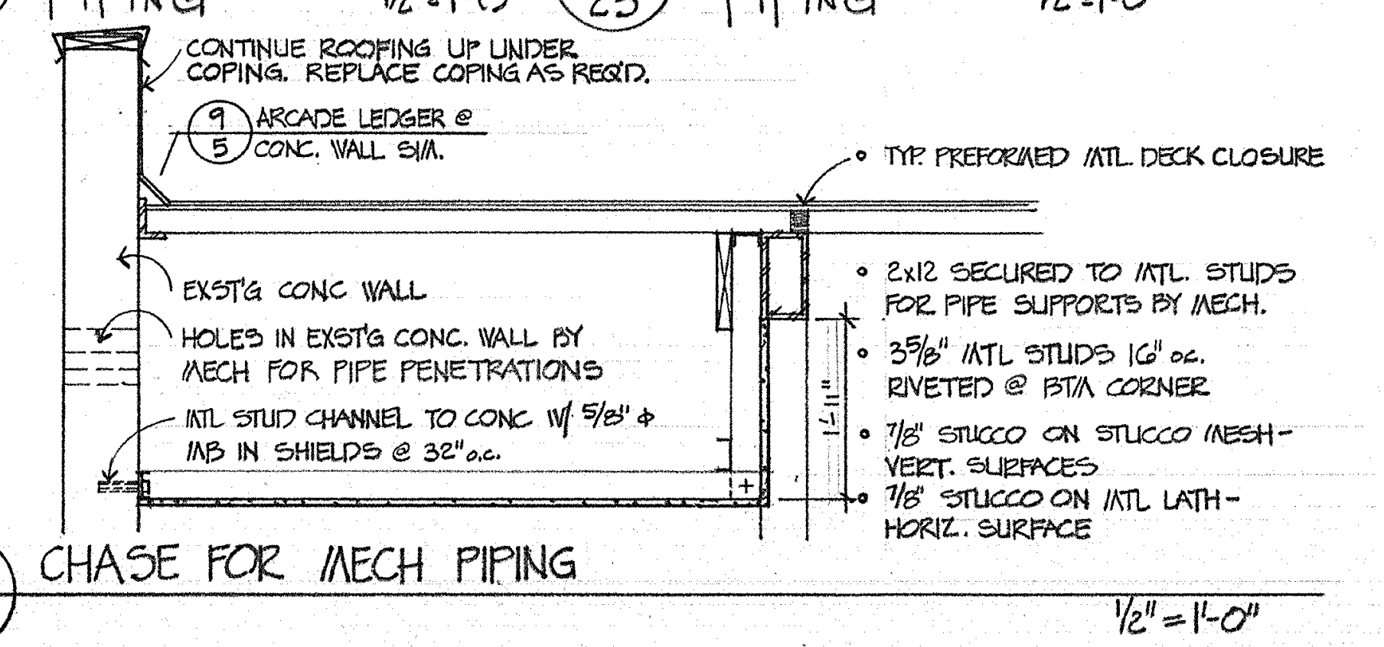
CONTINUE ROOFING UP UNDER COPING. REPLACE COPING AS REQ'D.
9/5 ARCADE LEDGER @ CONC. WALL S/M.
○ TYP. PREFORMED MTL. DECK CLOSURE
EXST'G CONC WALL
HOLES IN EXST'G CONC. WALL BY MECH FOR PIPE PENETRATIONS
MTL STUD CHANNEL TO CONC W/ 5/8" ⌀ MB IN SHIELDS @ 32"o.c.
○ 2x12 SECURED TO MTL. STUDS FOR PIPE SUPPORTS BY MECH.
○ 3 5/8" MTL STUDS 16" o.c. RIVETED @ BTM CORNER
○ 7/8" STUCCO ON STUCCO MESH - VERT. SURFACES
○ 7/8" STUCCO ON MTL LATH - HORIZ. SURFACE
1'-11"

5/25 CHASE FOR MECH PIPING 1/2" = 1'-0"

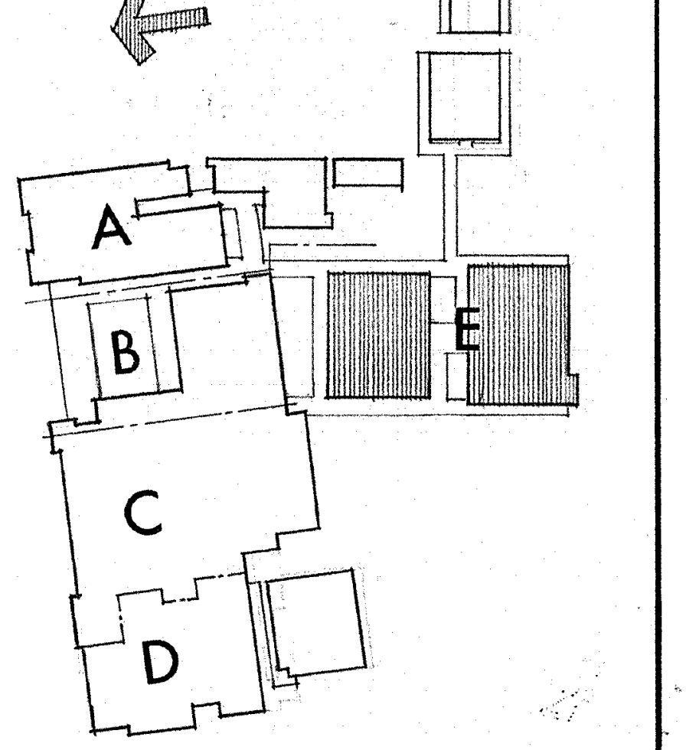

ROOF FRAMING PLAN – SECTOR E

SWEET HOME HIGH SCHOOL
ADDITIONS AND ALTERATIONS 1974
DISTRICT 55 LINN COUNTY, OREGON

ARCHITECTS
HAMLIN, MARTIN,
SCHULTZ & GEYER
AIA
159 W. 12TH EUGENE, OREGON 97401

A
25
JOB NO.

REGISTERED ARCHITECT
CLARE K. HAMLIN
Clare K Hamlin
EUGENE, OREGON
STATE OF OREGON

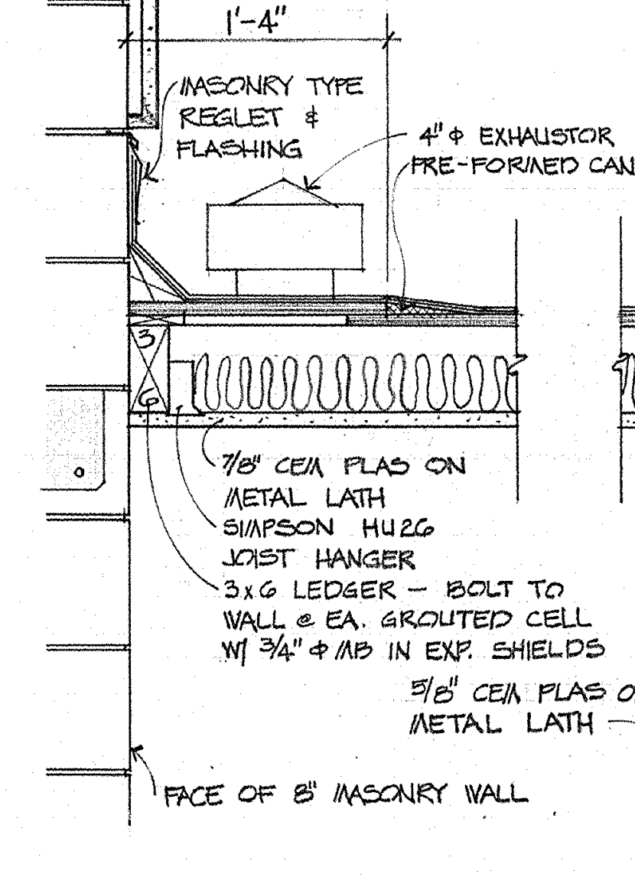
1'-4"
MASONRY TYPE REGLET & FLASHING
4" ϕ EXHAUSTOR
7/8" CEM PLAS ON METAL LATH
SIMPSON HU2G JOIST HANGER
3x6 LEDGER - BOLT TO WALL @ EA. GROUTED CELL W/ 3/4" ϕ A.B. IN EXP. SHIELDS
5/8" CEM PLAS ON METAL LATH
FACE OF 8" MASONRY WALL

1/26 JOIST SUPPORT @ N. WALL 1"=1'-0"

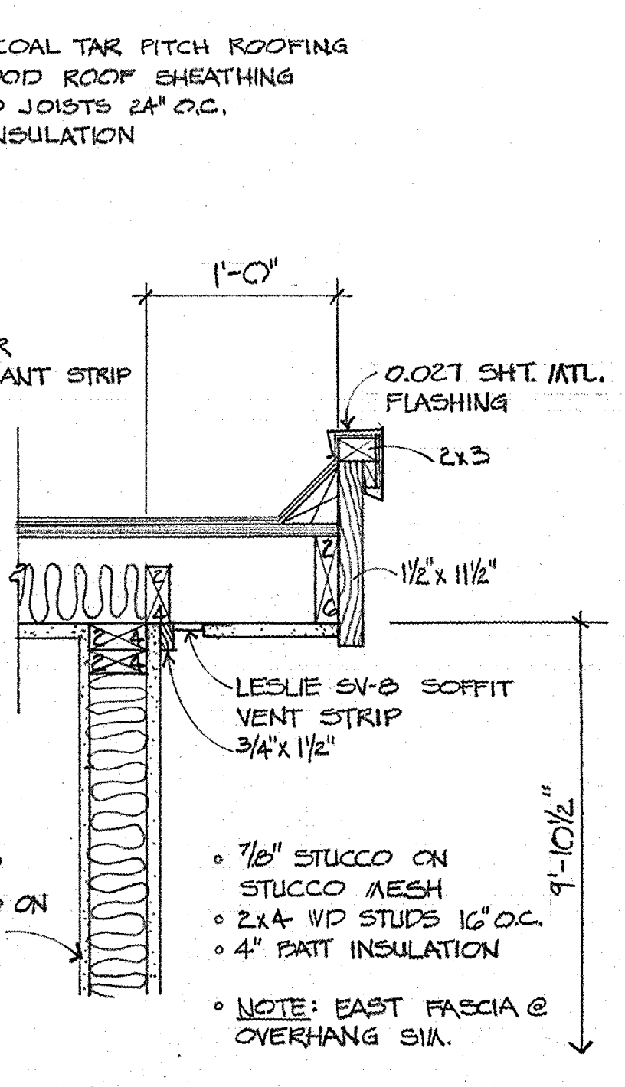
BUILT-UP COAL TAR PITCH ROOFING
3/4" PLYWOOD ROOF SHEATHING
2x6 WOOD JOISTS 24" O.C.
4" BATT INSULATION
1'-0"
PRE-FORMED CANT STRIP
0.027 SH'T. MTL. FLASHING
2x3
1 1/2" x 11 1/4"
LEDLIE SV-8 SOFFIT VENT STRIP
3/4" x 1 1/4"
7/8" STUCCO ON STUCCO MESH
2x4 WD STUDS 16" O.C.
4" BATT INSULATION
NOTE: EAST FASCIA @ OVERHANG SIM.
9'-10 1/2"

2/26 FASCIA @ SOUTH WALL 1"=1'-0"

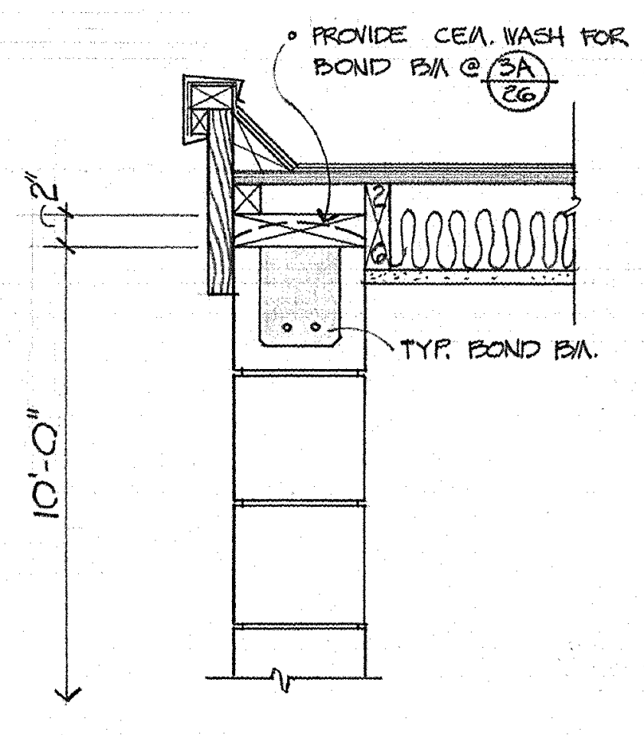
PROVIDE CEM. WASH FOR BOND BM.
TYP. BOND BM.
10'-0"

3/26 FASCIA @ WEST WALL 1"=1'-0"

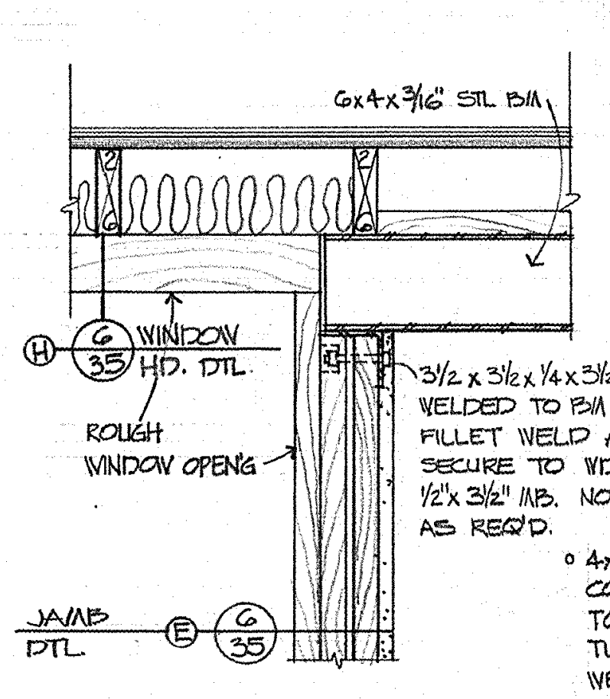
6x4x3/16 STL BM.
WINDOW HD. DTL
ROUGH WINDOW OPENG
JAMB DTL
3 1/2 x 3 1/2 x 1/4 x 5 1/2 STL ∠ WELDED TO BM. W/ 3/16" FILLET WELD ALL SIDES. SECURE TO WD. COL. W/ 1/2 x 3 1/2" M.B. NOTCH COL. AS REQ'D.
4x4x1/4 STL TUBE COL. SHOP WELD TO 4x6x3/16 STL TUBE BM. GRIND WELDS SMOOTH.

4/26 STL BEAM @ WD. STUD WALL 1"=1'-0"

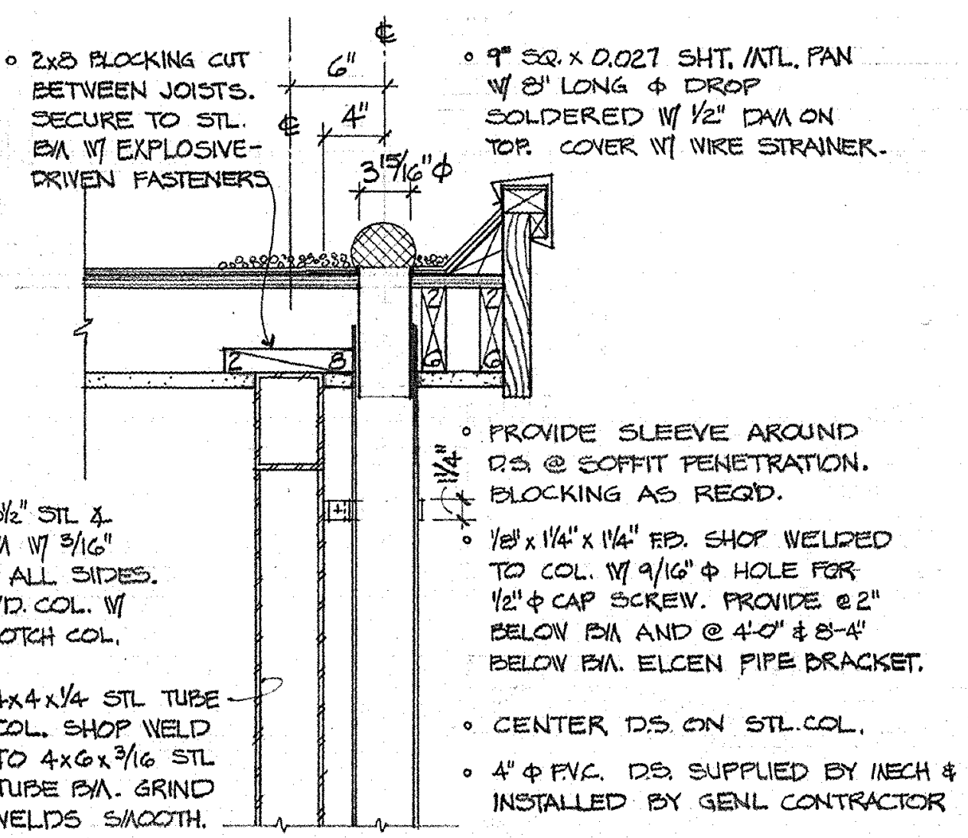
2x8 BLOCKING CUT BETWEEN JOISTS. SECURE TO STL BM W/ EXPLOSIVE-DRIVEN FASTENERS
9" SQ. x 0.027 SHT. MTL. PAN W/ 8" LONG ϕ DROP SOLDERED W/ 1/2" DIA ON TOP. COVER W/ WIRE STRAINER.
PROVIDE SLEEVE AROUND D.S. @ SOFFIT PENETRATION. BLOCKING AS REQ'D.
1/8 x 1 1/4 x 1 1/4" FB. SHOP WELDED TO COL. W/ 9/16" ϕ HOLE FOR 1/2" ϕ CAP SCREW. PROVIDE @ 2" BELOW BM. AND @ 4'-0" & 8'-6" BELOW BM. ELCEN PIPE BRACKET.
CENTER D.S. ON STL COL.
4" P.V.C. D.S. SUPPLIED BY MECH & INSTALLED BY GEN'L CONTRACTOR

5/26 DOWNSPOUT DTL @ WD. JOISTS 1"=1'-0"

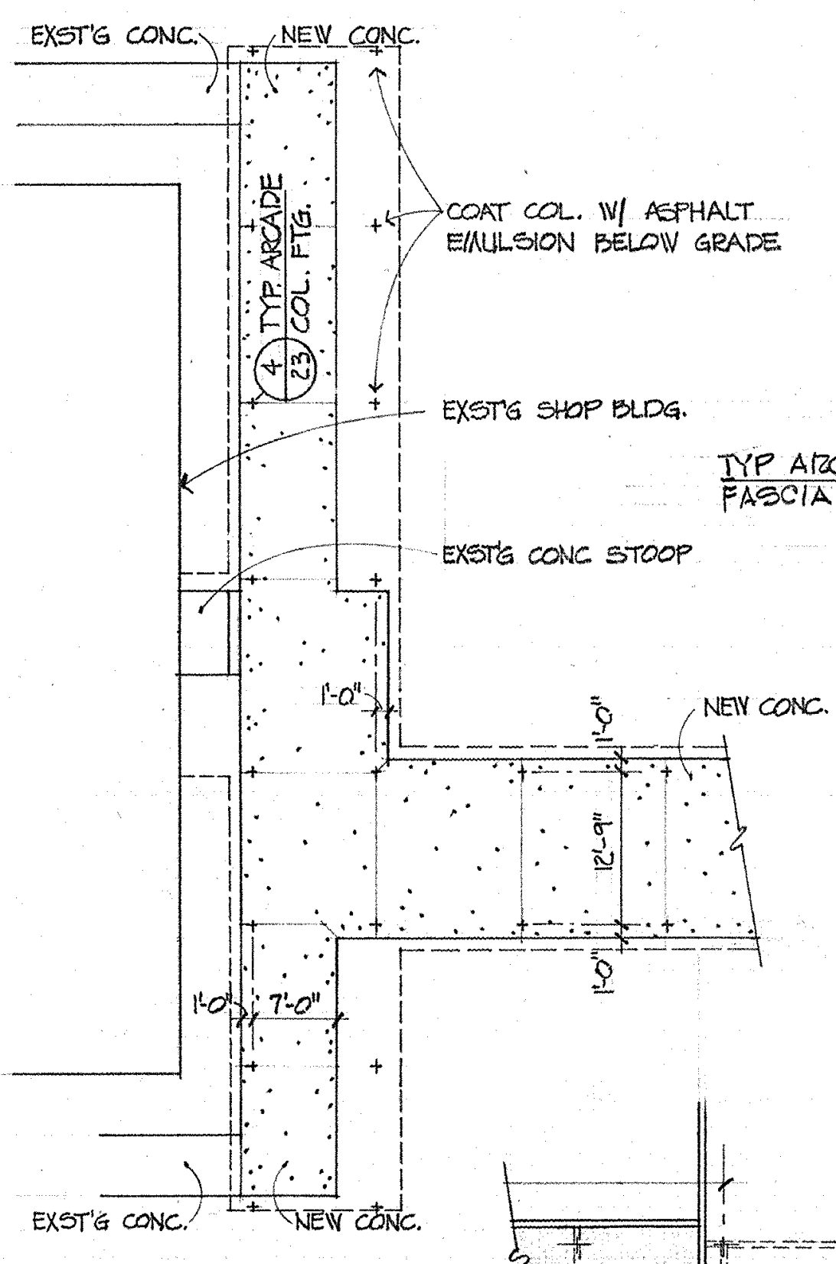
EXST'G CONC.
NEW CONC.
COAT COL. W/ ASPHALT EMULSION BELOW GRADE
EXST'G SHOP BLDG.
EXST'G CONC STOOP
NEW CONC.
CONNECTION DTL.
EXST'G CONC.
NEW CONC.

B FLATWORK PLAN

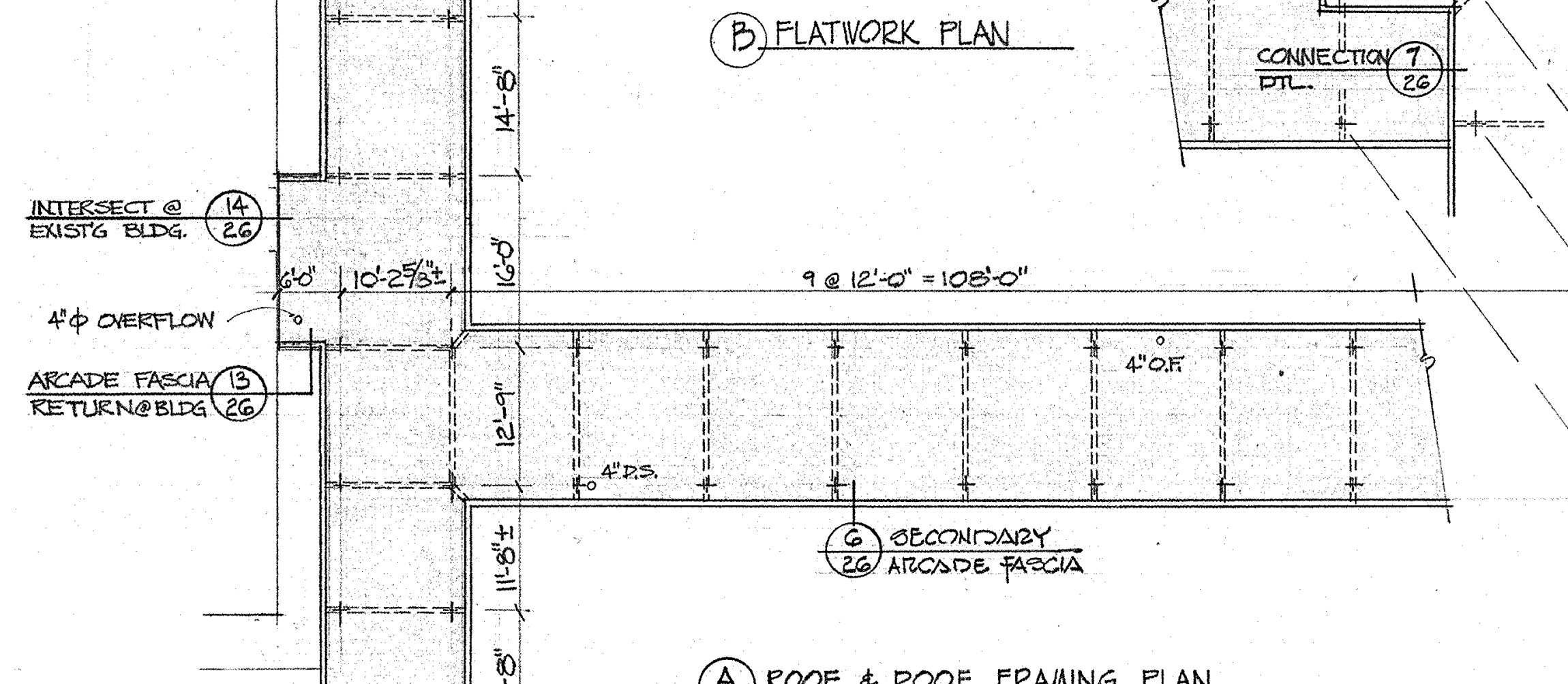
ARCADE FASCIA RETURN
INTERSECT @ EXST'G BLDG.
4"ϕ OVERFLOW
ARCADE FASCIA RETURN @ BLDG.
9 @ 12'-0" = 108'-0"
4" D.S.
SECONDARY ARCADE FASCIA

A ROOF & ROOF FRAMING PLAN

CONNECTING ARCADE TO EXST'G SHOP BLDG.
ADD. ALTERNATE E 1/16"=1'-0"

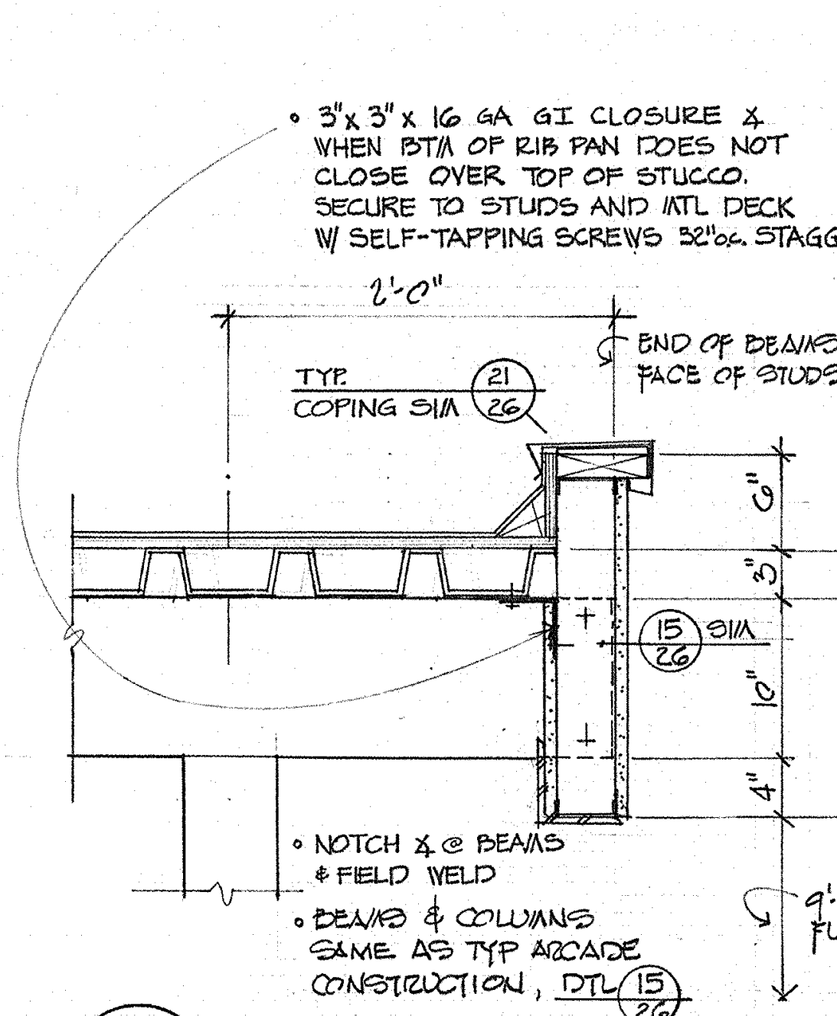
3"x3"x16 GA GI CLOSURE & WHEN BTM OF RIB PAN DOES NOT CLOSE OVER TOP OF STUCCO. SECURE TO STUDS AND MTL DECK W/ SELF-TAPPING SCREWS 32" O.C. STAGGERED
2'-0"
TYP. COPING SIM.
END OF BEAMS, FACE OF STUDS
NOTCH ℄ @ BEAMS & FIELD WELD
BEAMS & COLUMNS SAME AS TYP ARCADE CONSTRUCTION, DTL 15
9'-9" TO NEW CLASSROOM FLOOR ELEVATION

6/26 SECONDARY ARCADE FASCIA

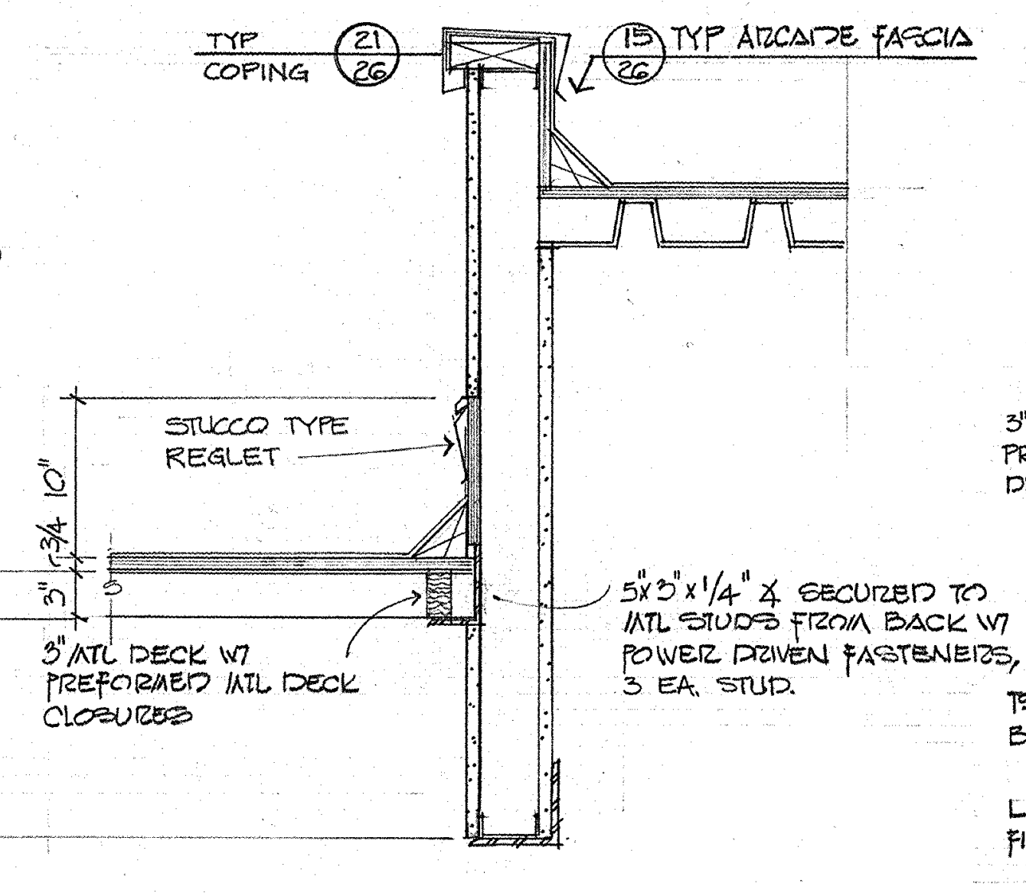
TYP. COPING
TYP ARCADE FASCIA
STUCCO TYPE REGLET
3" MTL DECK W/ PREFORMED MTL DECK CLOSURES
3"x3"x1/4" ∠ SECURED TO MTL STUDS FROM BACK W/ POWER DRIVEN FASTENERS, 3 EA STUD.

7/26 SECONDARY FASCIA CONN TO TYP ARCADE

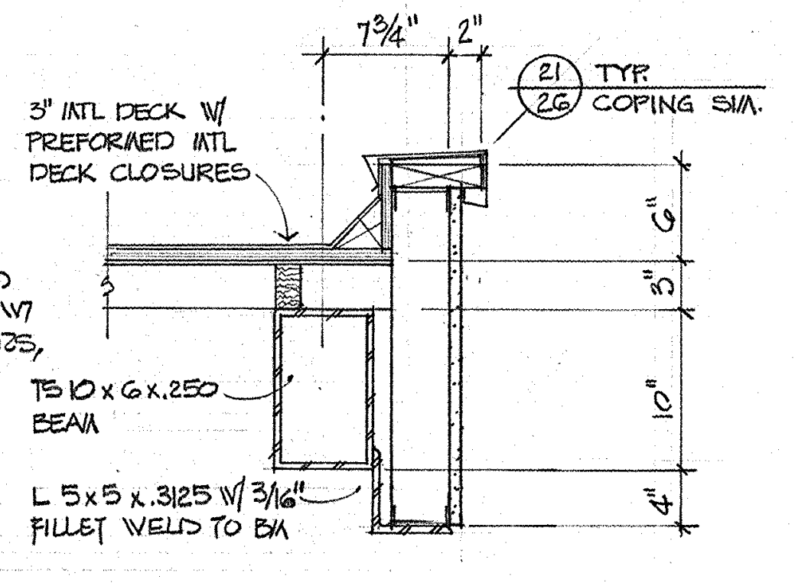
3" MTL DECK W/ PREFORMED MTL DECK CLOSURES
TYP. COPING SIM.
TS 10x6x.250 BEAM
L 5x3x.3125 W/ 3/16" FILLET WELD TO BM

8/26 FASCIA @ END OF SECONDARY ARCADE

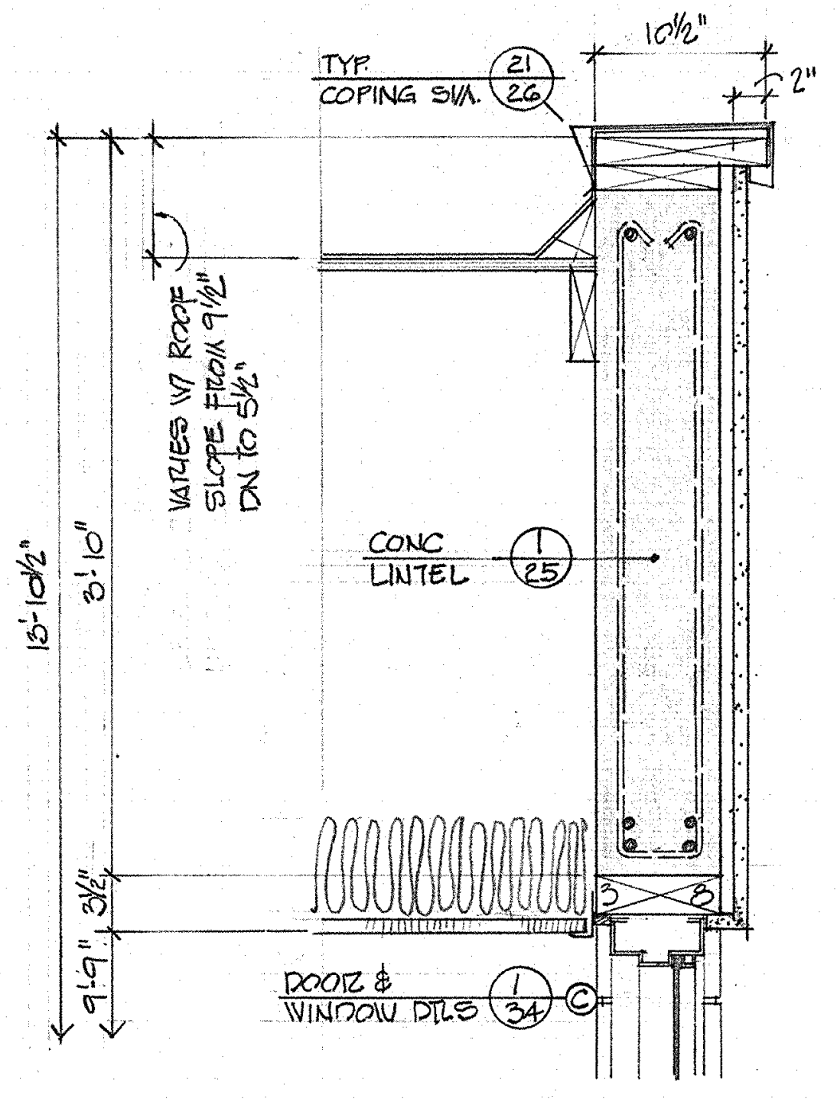
TYP. COPING SIM.
VARIES W/ ROOF SLOPE FROM 9 1/2" ON TO 5 1/2"
CONC LINTEL
DOOR & WINDOW DTLS

9/26 TYP PARAPET @ LINTEL @ SLOPING ROOF

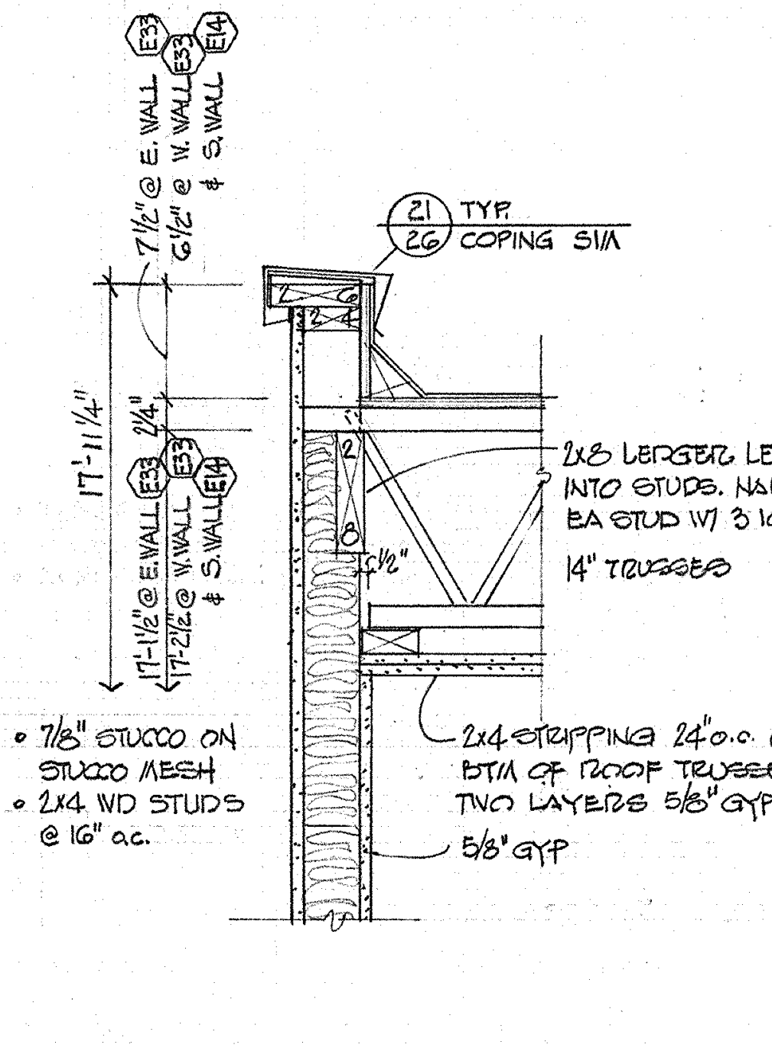
TYP. COPING SIM.
2x8 LEDGERS LET INTO STUDS. NAIL TO EA STUD W/ 3 16d.
14" TRUSSES
2x4 STRIPPING 24" O.C. ON BTM OF ROOF TRUSSES. TWO LAYERS 5/8" GYP BD.
7/8" STUCCO ON STUCCO MESH
2x6 WD STUDS @ 16" o.c.

10/26 PARAPET @ MECH RM TRUSS SUPPORT

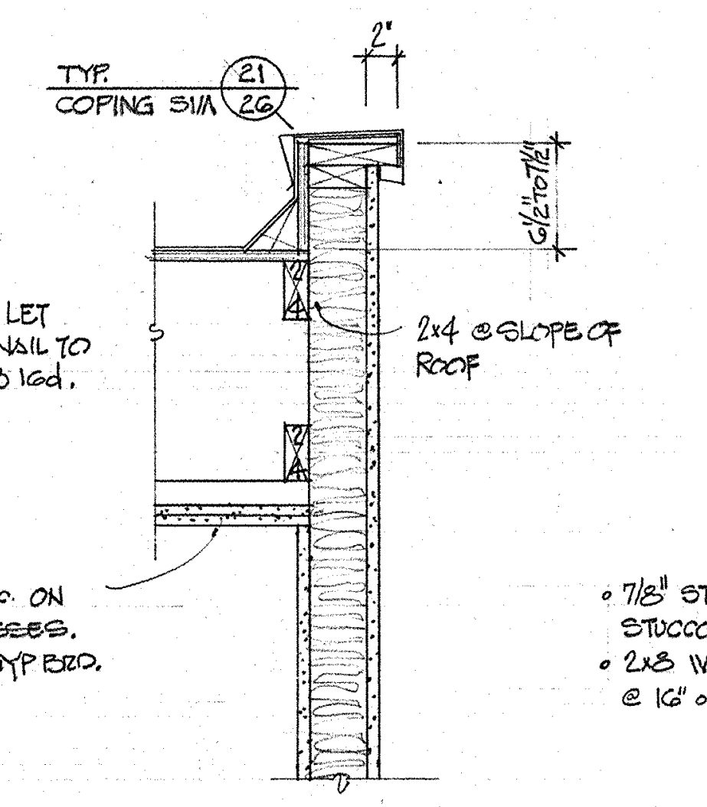
TYP. COPING SIM.
2x4 @ SLOPE OF ROOF
5/8" GYP

11/26 PARAPET @ MECH ROOM

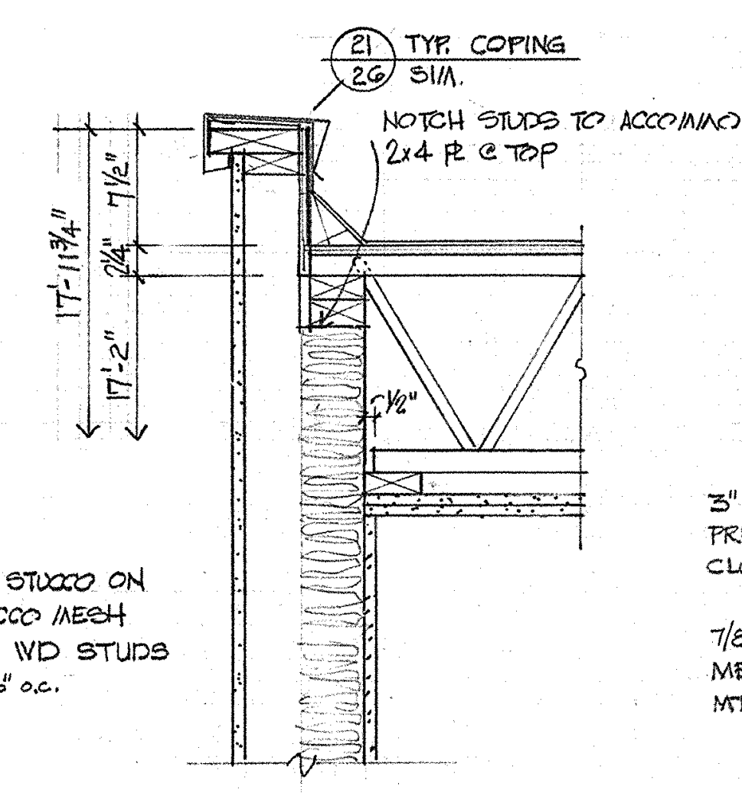
TYP. COPING SIM.
NOTCH STUDS TO ACCOMMODATE 2x4 R @ TOP
7/8" STUCCO ON STUCCO MESH
2x6 WD STUDS @ 16" o.c.

12/26 PARAPET NORTH WALL MECH RM 514

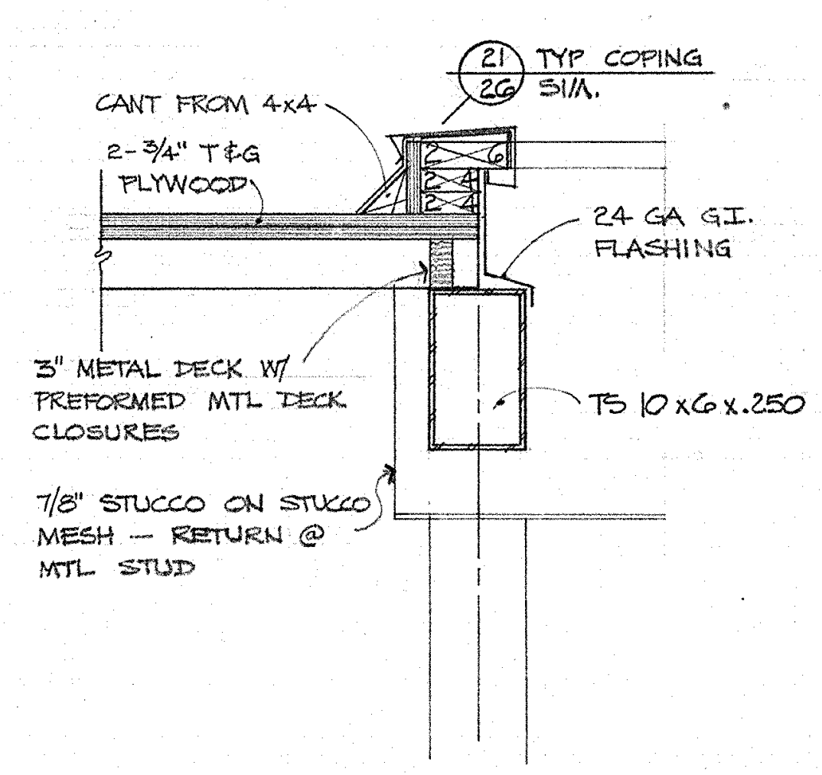
TYP COPING SIM.
CANT FROM 4x4
2-3/4" T&G PLYWOOD
24 GA G.I. FLASHING
3" METAL DECK W/ PREFORMED MTL DECK CLOSURES
TS 10x6x.250 BM
7/8" STUCCO ON STUCCO MESH - RETURN @ MTL STUD

13/26 FASCIA RETURN @ EXST'G SHOP BLDG.

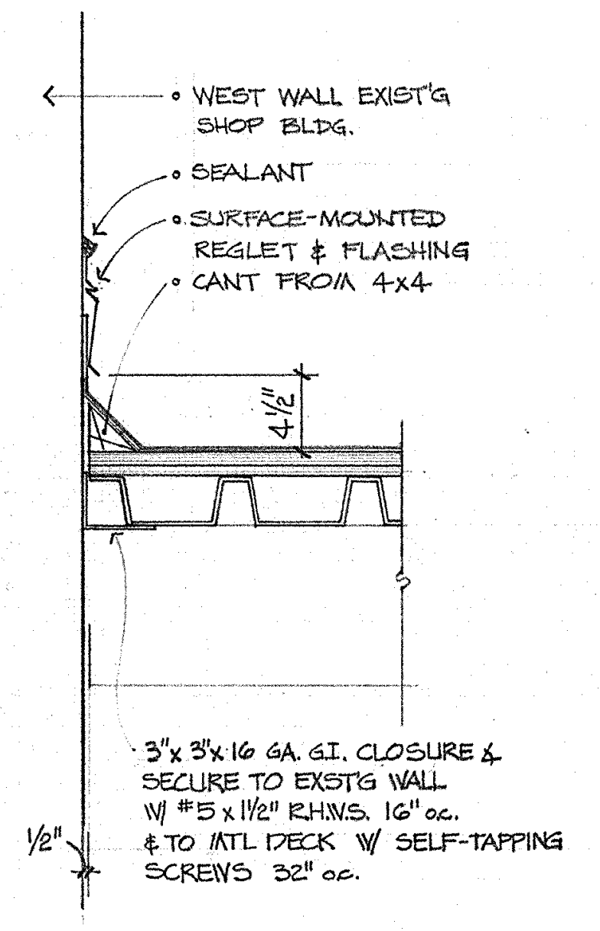
WEST WALL EXST'G SHOP BLDG.
SEALANT
SURFACE-MOUNTED REGLET & FLASHING
CANT FROM 4x4
3"x3"x16 GA G.I. CLOSURE & SECURE TO EXST'G WALL W/ #5 x 1 1/2" RHMS. 16" o.c. & TO MTL DECK W/ SELF-TAPPING SCREWS 32" o.c.

14/26 INTERSECTION DTL. @ EXST'G SHOP BLDG.

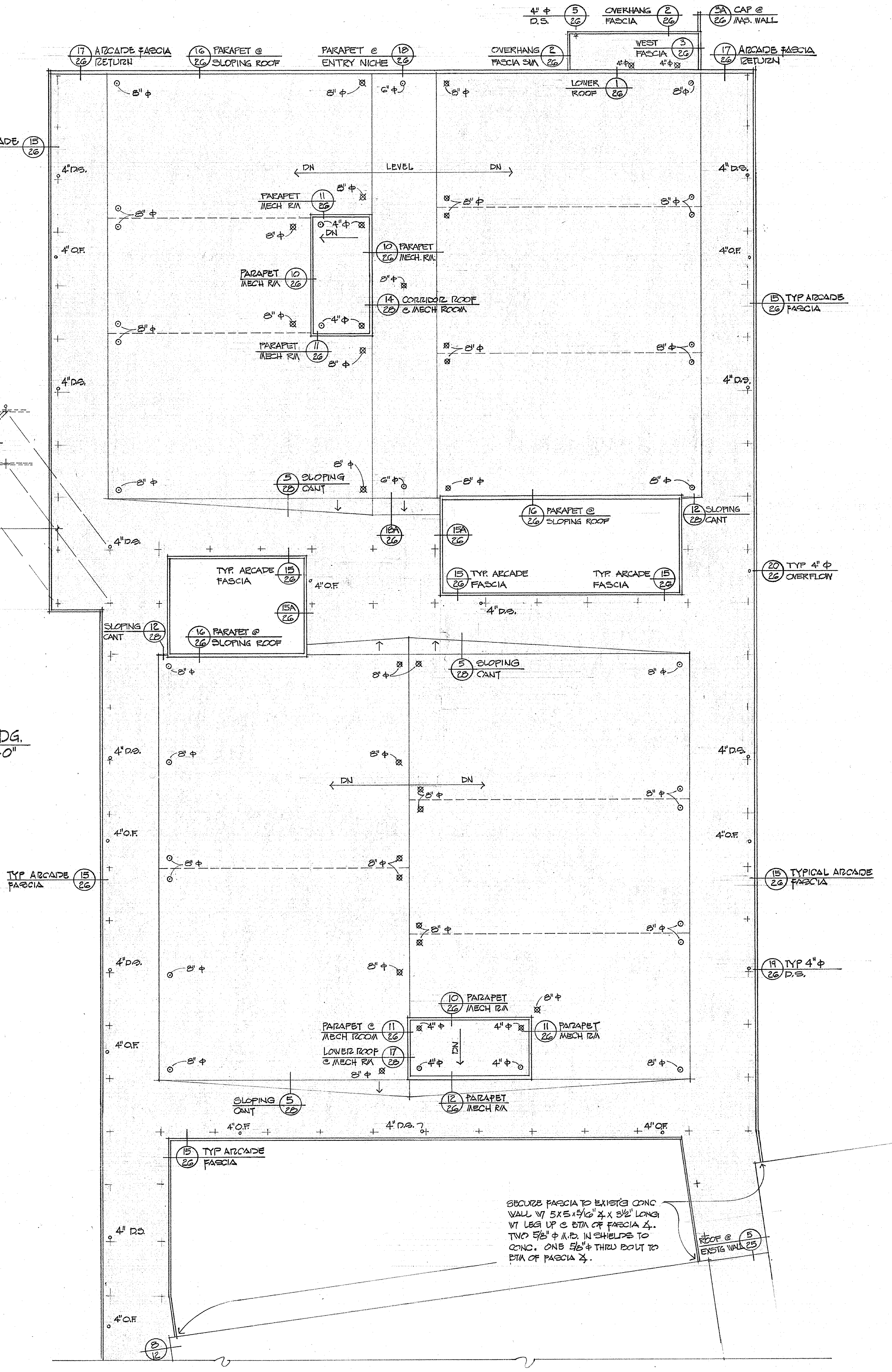
ARCADE FASCIA RETURN
PARAPET @ SLOPING ROOF
PARAPET @ ENTRY NICHE
OVERHANG FASCIA SIM.
LOWER ROOF
4" ϕ O.S.
OVERHANG FASCIA
CAP @ ADJ. WALL
WEST FASCIA
ARCADE FASCIA RETURN
TYP ARCADE FASCIA
DN
LEVEL
DN
PARAPET MECH RM
PARAPET MECH RM
CORRIDOR ROOF @ MECH ROOM
TYP ARCADE FASCIA
SLOPING CANT
PARAPET @ SLOPING ROOF
TYP ARCADE FASCIA
TYP 4" ϕ OVERFLOW
TYP ARCADE FASCIA
SLOPING CANT
PARAPET @ SLOPING ROOF
4" D.S.
4" O.F.
TYPICAL ARCADE FASCIA
TYP 4" ϕ D.S.
PARAPET MECH RM
PARAPET @ MECH RM
LOWER ROOF @ MECH RM
SLOPING CANT
PARAPET MECH RM
TYP ARCADE FASCIA
SECURE FASCIA TO EXST'G CONC WALL W/ 5x3x5/16 ∠ x 3 1/2" LONG W/ LEG UP @ BTM OF FASCIA ∠. TWO 3/8" ϕ A.B. N SHIELDS TO CONC. ONE 5/8" ϕ THRU BOLT TO BTM OF FASCIA ∠.
@ EXST'G WALL

ROOF PLAN
SECTOR E 1/16"=1'-0"
⊗ ROOF EXHAUSTOR
⊙ ROOF JACK
N

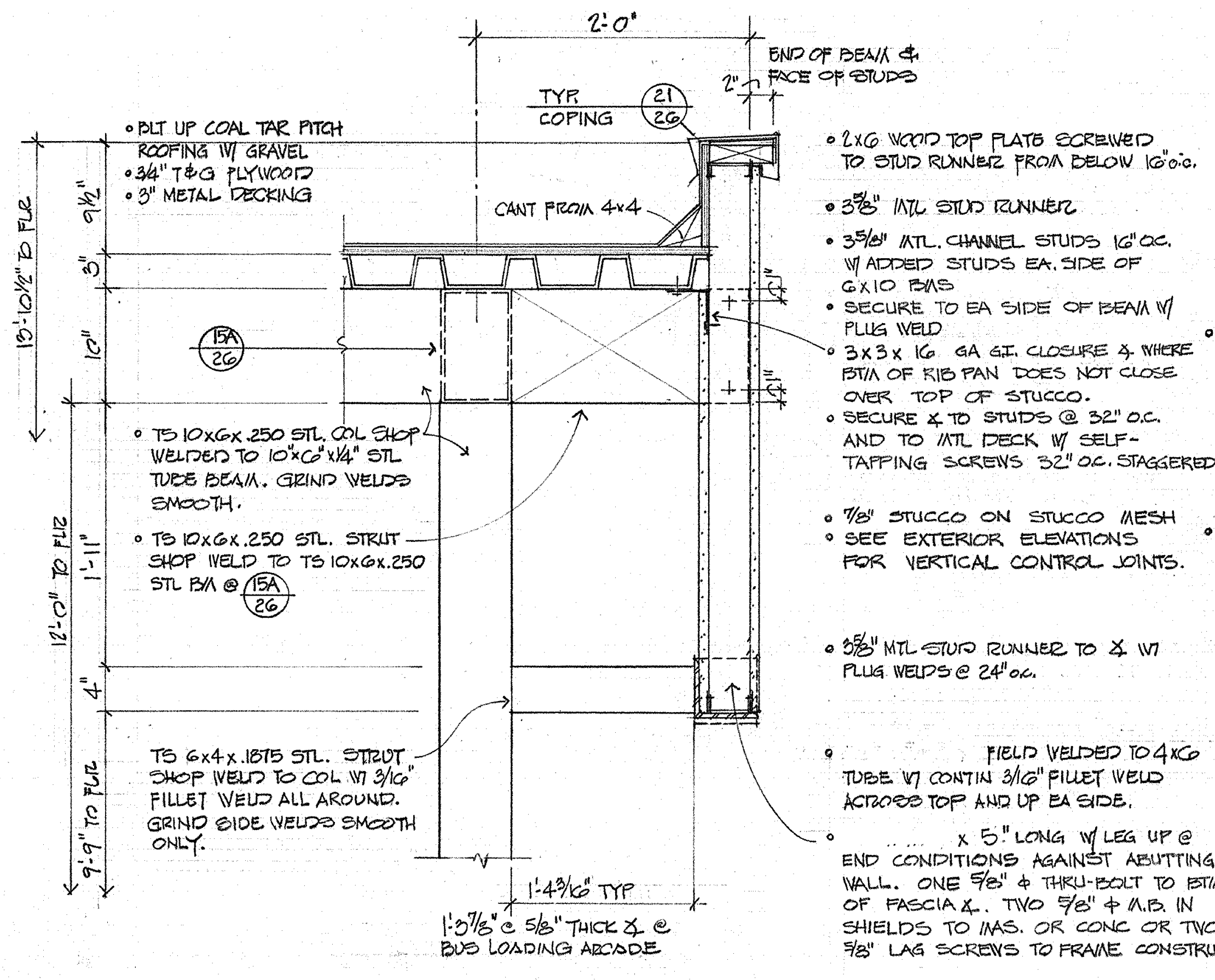
2'-0"
TYP. COPING
END OF BEAM & FACE OF STUDS
BLT UP COAL TAR PITCH ROOFING W/ GRAVEL
3/4" T&G PLYWOOD
3" METAL DECKING
CANT FROM 4x4
2x6 WOOD TOP PLATE SCREWED TO STUD RUNNER FROM BELOW 12" o.c.
3 5/8" MTL STUD RUNNER
3 5/8" MTL CHANNEL STUDS 12" OC W/ ADDED STUDS EA. SIDE OF 6x10 BMS
SECURE TO EA SIDE OF BEAM W/ PLUG WELD
3x3x16 GA GI CLOSURE & WHERE BTM OF RIB PAN DOES NOT CLOSE OVER TOP OF STUCCO.
SECURE & TO STUDS @ 32" O.C. AND TO MTL DECK W/ SELF-TAPPING SCREWS 32" O.C. STAGGERED
7/8" STUCCO ON STUCCO MESH
SEE EXTERIOR ELEVATIONS FOR VERTICAL CONTROL JOINTS.
3 5/8" MTL STUD RUNNER TO ∠ W/ PLUG WELDS @ 24" o.c.
TS 10x6x.250 STL COL SHOP WELDED TO 10x6x1/4 STL TUBE BEAM. GRIND WELDS SMOOTH.
TS 10x6x.250 STL STRUT SHOP WELD TO 10x6x.250 STL BM
TS 6x4x.1875 STL STRUT SHOP WELD TO COL W/ 3/16" FILLET WELD ALL AROUND. GRIND SIDE WELDS SMOOTH ONLY.
FIELD WELDED TO 4x6 TUBE W/ CONTIN 3/16" FILLET WELD ACROSS TOP AND UP EA SIDE.
∠ x 5" LONG W/ LEG UP @ END CONDITIONS AGAINST ABUTTING WALL. ONE 5/8" ϕ THRU-BOLT TO BTM OF FASCIA ∠. TWO 3/8" ϕ A.B. IN SHIELDS TO MAS. OR CONC OR TWO 3/8" LAG SCREWS TO FRAME CONSTRUCTION.
1'-4 3/16" TYP
1'-5 7/8" TO 5/8" THICK ∠ @ BUS LOADING ARCADE
9'-9" TO FLR
12'-0" TO FLR

15/26 TYPICAL ARCADE FASCIA DTLS 1"=1'-0"

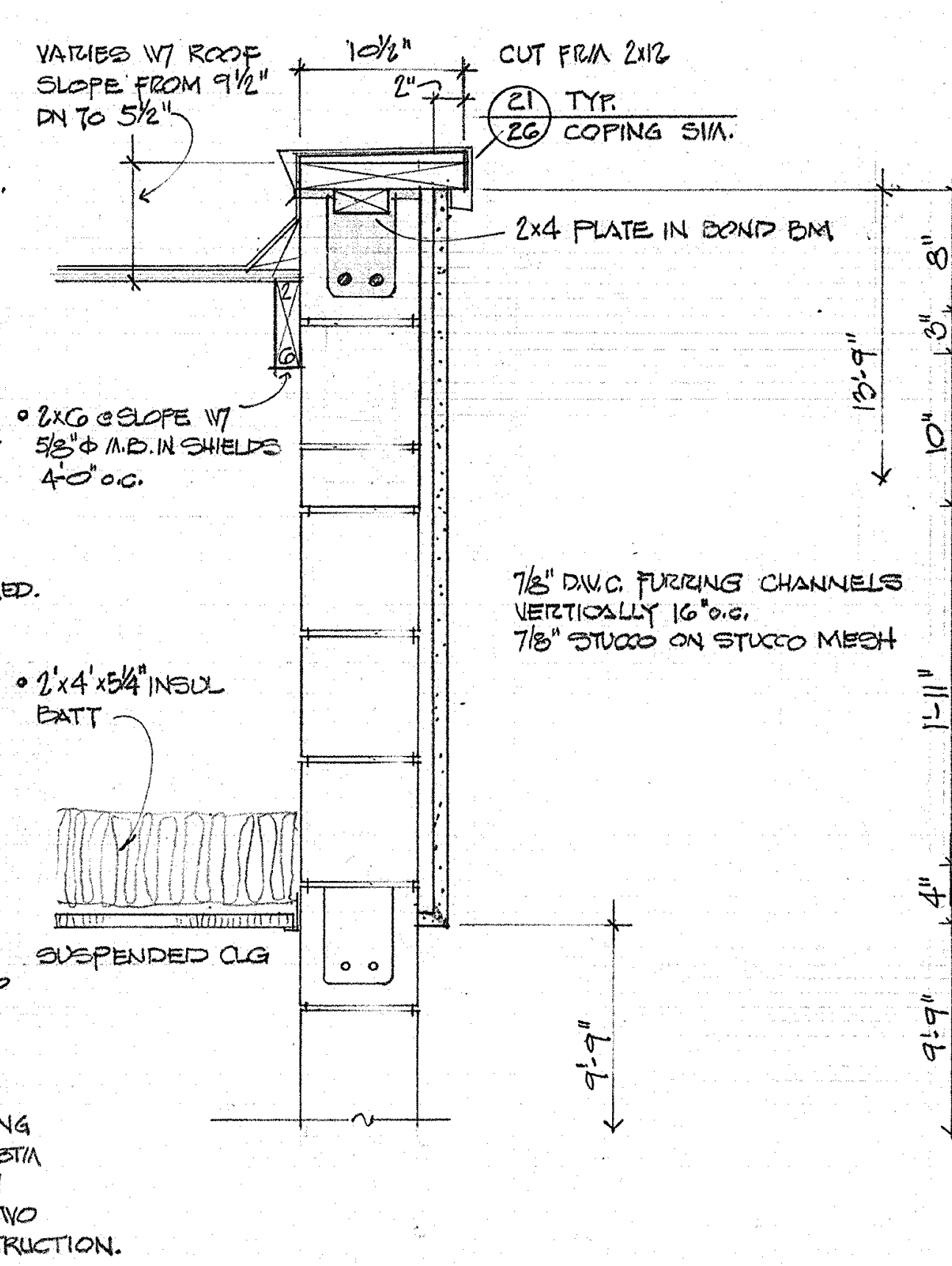
VARIES W/ ROOF SLOPE FROM 9 1/2" ON TO 5 1/2"
CUT FROM 2x12
TYP. COPING SIM.
2x4 PLATE IN BOND BM
2x6 @ SLOPE W/ 5/8" ϕ A.B. IN SHIELDS 4'-0" o.c.
7/8" D.W.C. FURRING CHANNELS VERTICALLY 16" O.C.
7/8" STUCCO ON STUCCO MESH
2"x4"x48" INSUL BATT
SUSPENDED CLG

16/26 PARAPET @ SLOPING ROOF 1"=1'-0"

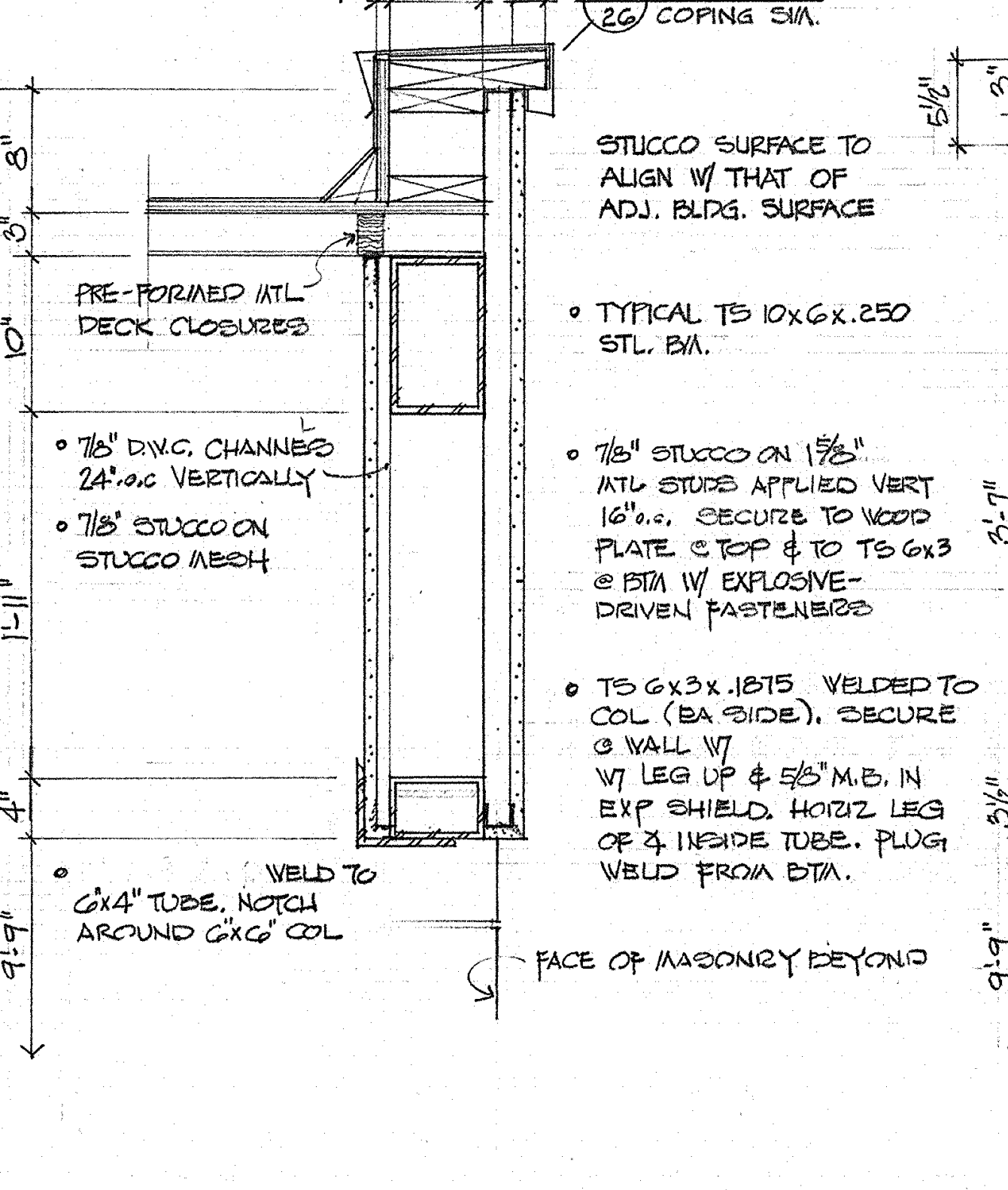
TYP. COPING SIM.
STUCCO SURFACE TO ALIGN W/ THAT OF ADJ. BLDG. SURFACE
PRE-FORMED MTL DECK CLOSURES
TYPICAL TS 10x6x.250 STL. BM.
7/8" D.W.C. CHANNELS 24" o.c. VERTICALLY
7/8" STUCCO ON STUCCO MESH
7/8" STUCCO ON 1 5/8" MTL STUDS APPLIED VERT 16" o.c. SECURE TO WOOD PLATE @ TOP & TO TS 6x3 @ BTM W/ EXPLOSIVE-DRIVEN FASTENERS
TS 6x3x.1875 WELDED TO COL. (EA SIDE). SECURE @ WALL W/ ∠ W/ LEG UP & 5/8" M.B. IN EXP. SHIELD. HORIZ LEG OF ∠ INSIDE TUBE. PLUG WELD FROM BTM.
6x4" TUBE, NOTCH AROUND 6x6 COL
WELD TO
FACE OF MASONRY BEYOND

17/26 FASCIA RETURN @ SOUTH END OF ARCADE 1"=1'-0"

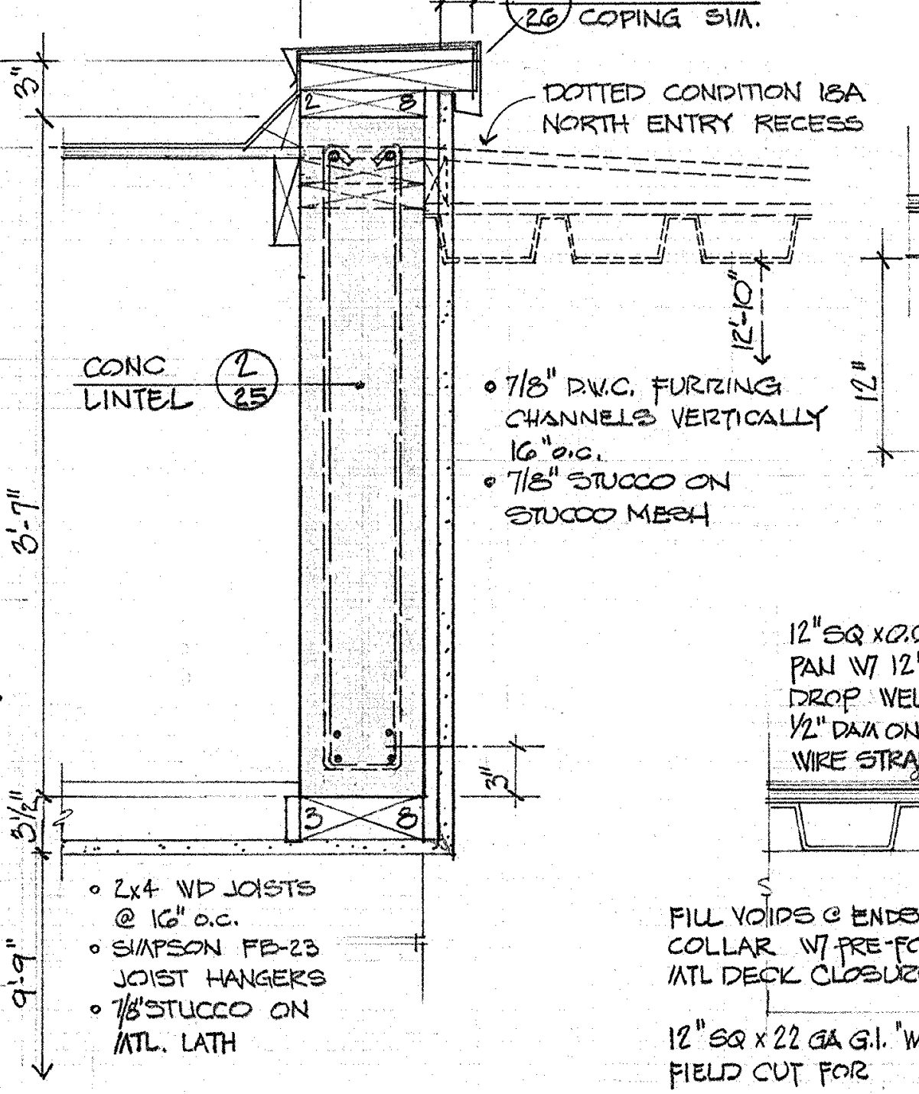
TYP. COPING SIM.
DOTTED CONDITION @ NORTH ENTRY RECESS
CONC LINTEL
7/8" D.W.C. FURRING CHANNELS VERTICALLY 16" o.c.
7/8" STUCCO ON STUCCO MESH
2x4 WD JOISTS @ 16" o.c.
SIMPSON PF-13 JOIST HANGERS
7/8" STUCCO ON MTL LATH

18/26 PARAPET & SOFFIT @ ENTRY RECESS 1"=1'-0"

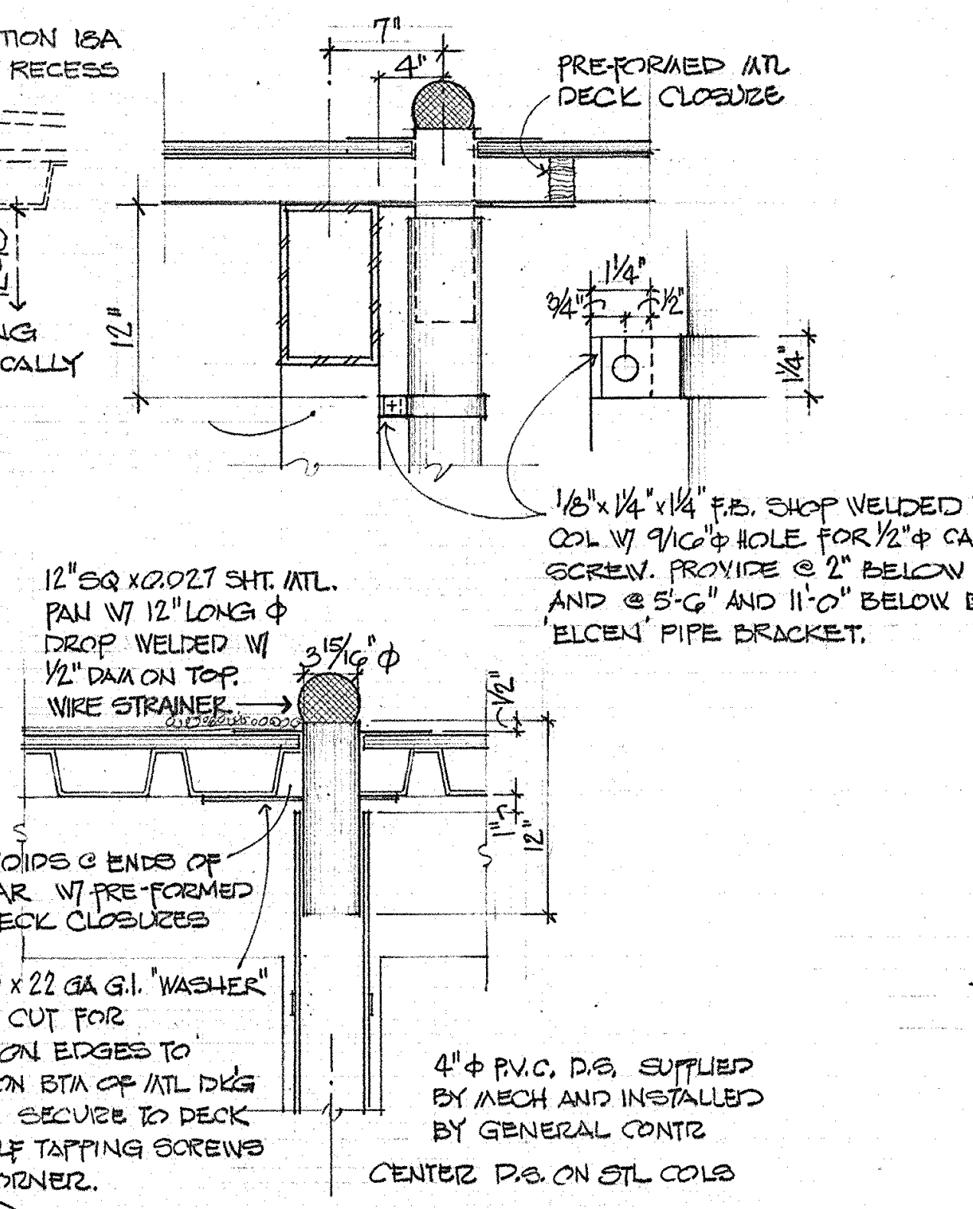
PREFORMED MTL DECK CLOSURE
3/16" ϕ
1/8" x 1 1/4" x 1 1/4" F.B. SHOP WELDED TO COL W/ 9/16" ϕ HOLE FOR 1/2" ϕ CAP SCREW. PROVIDE @ 2" BELOW BM. AND @ 5'-6" AND 11'-0" BELOW BM. ELCEN PIPE BRACKET.
12" SQ x 0.027 SHT. MTL. PAN W/ 12" LONG ϕ DROP WELDED W/ 1/2" DIA ON TOP. WIRE STRAINER
FILL VOIDS @ ENDS OF COLLAR W/ PRE-FORMED MTL DECK CLOSURES
12" SQ x 22 GA G.I. "WASHER" FIELD CUT FOR POSITION EDGES TO FALL ON BTM OF MTL DECK RIBS. SECURE TO DECK W/ SELF TAPPING SCREWS EA CORNER.
4" ϕ P.V.C. D.S. SUPPLIED BY MECH AND INSTALLED BY GENERAL CONTR.
CENTER D.S. ON STL COLS

19/26 DOWNSPOUT DTL @ MTL DECKING 1"=1'-0"

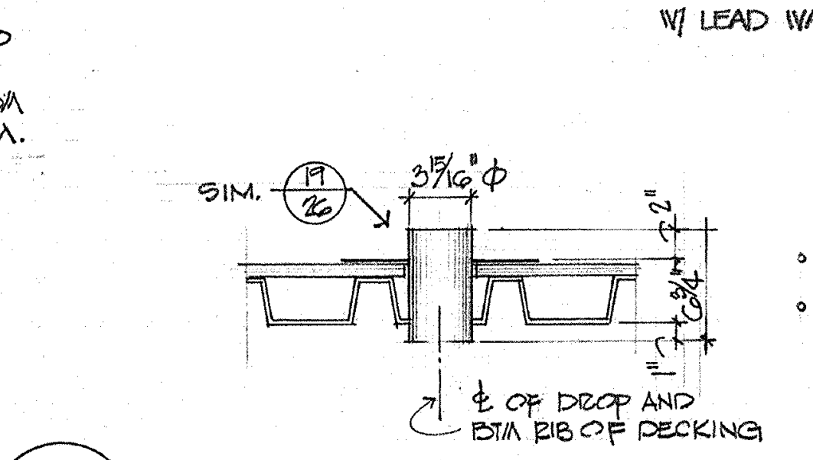
SIM.
3 3/16" ϕ
℄ OF DROP AND BTM RIB OF DECKING

20/26 OVERFLOW DTL @ MTL DECKING 1"=1'-0"

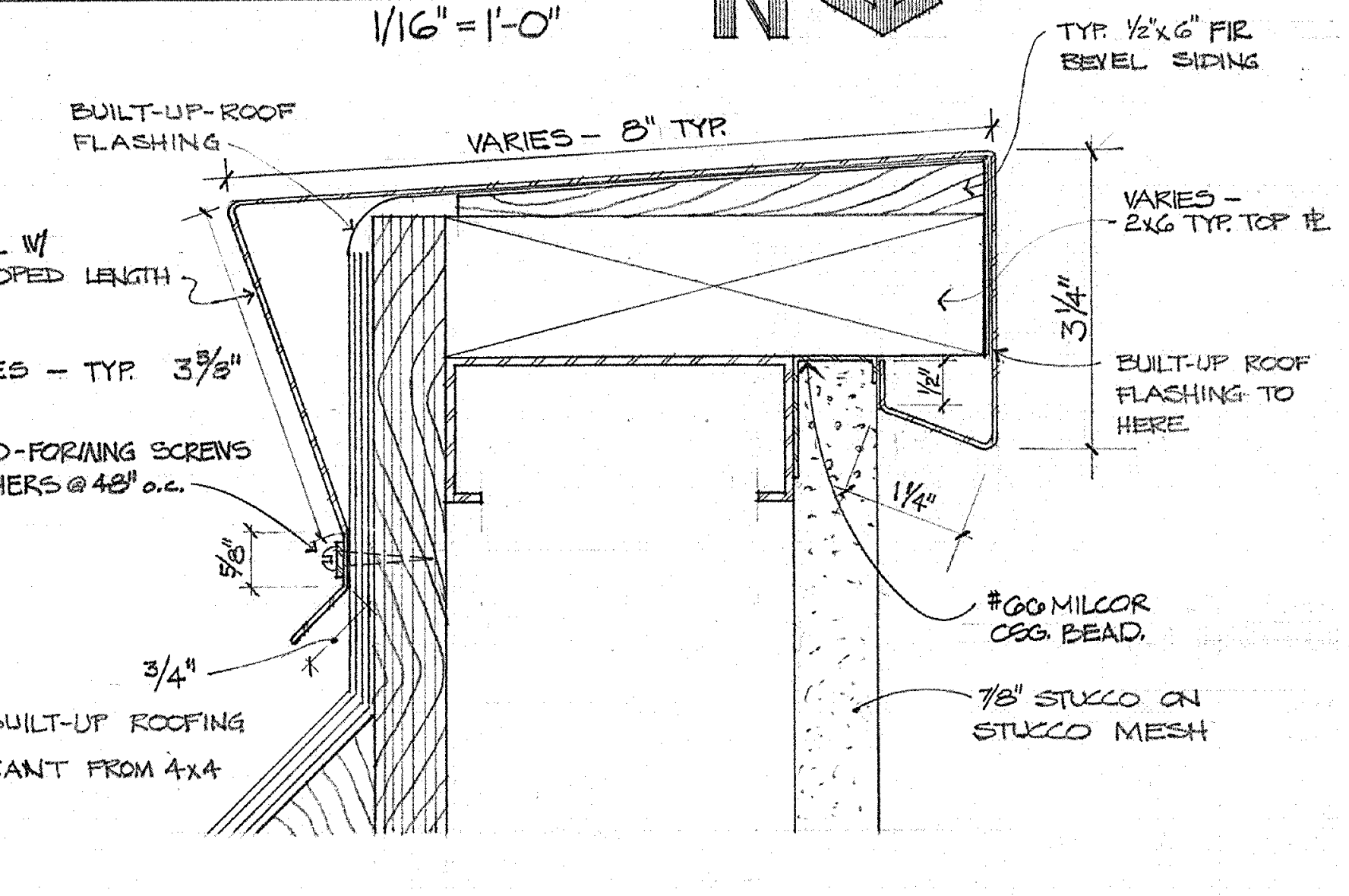
TYP. 1/2 x 6" FIR BEVEL SIDING
BUILT-UP-ROOF FLASHING
VARIES - 8" TYP
VARIES - 2x6 TYP. TOP ℄
0.027 SHT. MTL. W/ TYP. 15" DEVELOPED LENGTH
VARIES - TYP. 3 7/8"
#8 x 1" THREAD-FORMING SCREWS W/ LEAD WASHERS @ 48" o.c.
BUILT-UP ROOF FLASHING TO HERE
#60 MILCOR CSG BEAD
7/8" STUCCO ON STUCCO MESH
BUILT-UP ROOFING
CANT FROM 4x4

21/26 TYP. COPING DETAIL 6"=1'-0"

ROOF PLAN, DETAILS - SECTOR E
SWEET HOME HIGH SCHOOL
ADDITIONS AND ALTERATIONS 1974
DISTRICT 55 LINN COUNTY, OREGON

ARCHITECTS
HAMLIN, MARTIN,
SCHULTZ & GEYER
AIA
159 W. 12TH EUGENE, OREGON 97401

A
26
JOB NO.

REGISTERED ARCHITECT
CLARE K. HAMLIN
Clare K Hamlin
EUGENE, OREGON
STATE OF OREGON

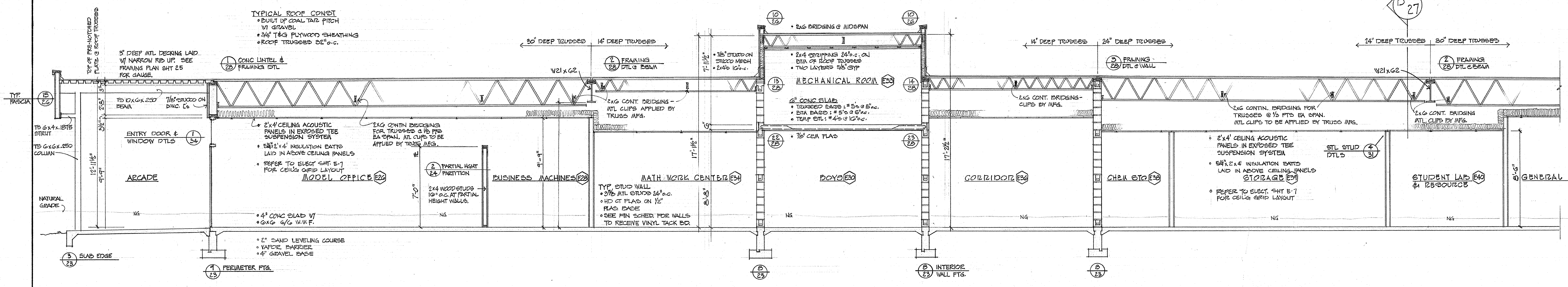
TYPICAL ROOF CONST
• BUILT UP COAL TAR PITCH W/ GRAVEL
• 3/4" T&G PLYWOOD SHEATHING
• ROOF TRUSSES 32" o.c.
TOP OF PRE-NOTCHED PLATE @ ROOF TRUSSES
3" DEEP MTL DECKING LAID W/ NARROW RIB UP. SEE FRAMING PLAN SHT 25 FOR GAUGE.
1/28 CONC LINTEL & FRAMING DTL
TYP. FASCIA 15/26
TS 10x6x.250 BEAM
7/8" STUCCO ON DWC. C's
TS 6x4x.1875 STRUT
TS 6x6x.250 COLUMN
ENTRY DOOR & WINDOW DTLS 1/34
• 2'x4' CEILING ACOUSTIC PANELS IN EXPOSED TEE SUSPENSION SYSTEM
• 5 1/4"x2'x4' INSULATION BATTS LAID IN ABOVE CEILING PANELS
• REFER TO ELECT SHT. E-7 FOR CEIL'G GRID LAYOUT
2x6 CONTIN BRIDGING FOR TRUSSES @ 1/3 PTS EA SPAN. MTL CLIPS TO BE APPLIED BY TRUSS MFG.
30" DEEP TRUSSES
14" DEEP TRUSSES
W21x62
2/28 FRAMING DTL @ BEAM
2x6 CONT. BRIDGING - MTL CLIPS APPLIED BY TRUSS MFG.
2/24 PARTIAL HGHT PARTITION
2x4 WOOD STUDS 16" o.c. AT PARTIAL HEIGHT WALLS.
ARCADE
MODEL OFFICE E26
BUSINESS MACHINES E28
MATH WORK CENTER E34
TYP. STUD WALL
• 3 5/8 MTL STUDS 24" o.c.
• HD CT PLAS ON 1/2" PLAS BASE
• SEE FIN SCHED. FOR WALLS TO RECEIVE VINYL TACK BD.
NATURAL GRADE
NG
12'-11 1/2"
9'-9"
2'-8"
3'-1/2"
7'-0"
9'-9"
7'-11 1/2"
17'-1 1/2"
8'-8"
• 4" CONC SLAB W/ 6x6 6/6 W.W.F.
• 2" SAND LEVELING COURSE
• VAPOR BARRIER
• 4" GRAVEL BASE
3/23 SLAB EDGE
9/23 PERIMETER FTG.
• 7/8" STUCCO ON STUCCO MESH
• 2x4's 16" o.c.
10/26
• 2x6 BRIDGING @ MIDSPAN
• 2x4 STRIPPING 24" o.c. ON BTM OF ROOF TRUSSES
• TWO LAYERS 5/8" GYP
13/28
MECHANICAL ROOM E33
14/28
6" CONC SLAB
• TRUSSED BARS: #5's @ 5" o.c.
• BTM BARS: #5's @ 5" o.c.
• TEMP STL: #4's @ 16" o.c.
22/28
• 7/8" CEM PLAS
23/28
BOYS E30
8/23
8/23 INTERIOR WALL FTG.
17'-2 1/2"
14" DEEP TRUSSES
24" DEEP TRUSSES
3/28 FRAMING DTL @ WALL
2x6 CONT. BRIDGING - CLIPS BY MFG.
CORRIDOR E36
CHEM STO E38
2x6 CONTIN. BRIDGING FOR TRUSSES @ 1/3 PTS EA SPAN. MTL CLIPS TO BE APPLIED BY TRUSS MFG.
• 2'x4' CEILING ACOUSTIC PANELS IN EXPOSED TEE SUSPENSION SYSTEM
• 5 1/4"x2'x4' INSULATION BATTS LAID IN ABOVE CEILING PANELS
• REFER TO ELECT. SHT E-7 FOR CEIL'G GRID LAYOUT
STORAGE E39
STL STUD DTLS 4/31
B 27
24" DEEP TRUSSES
30" DEEP TRUSSES
W21x62
2/28 FRAMING DTL @ BEAM
2x6 CONT. BRIDGING MTL CLIPS BY MFG.
STUDENT LAB & RESOURCE E40
8'-6"
GENERAL SCIENCE E48
4/28 FRAMING DTL EXT WALL
6/28 BEAM SUPPORT
ARCADE
9/23 PERIMETER FTG
SLAB EDGE 3/23

SECTION LOOKING SOUTH THRU MATH ~ SCIENCE BLDG

1/4" = 1'-0"

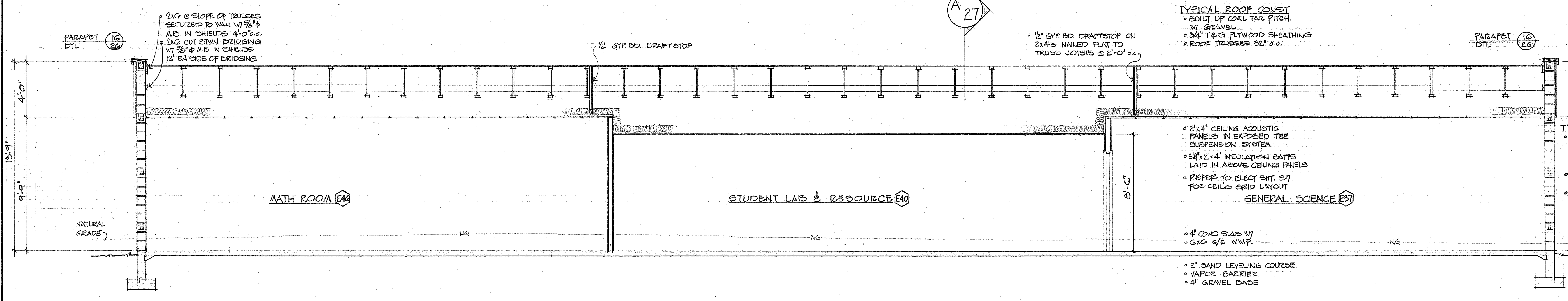
PARAPET DTL 16/26
• 2x6 @ SLOPE OF TRUSSES SECURED TO WALL W/ 5/8"φ M.B. IN SHIELDS 4'-0" o.c.
• 2x6 CUT BTWN BRIDGING W/ 5/8"φ M.B. IN SHIELDS 12" EA SIDE OF BRIDGING
1/2" GYP. BD. DRAFTSTOP
A 27
• 1/2" GYP. BD. DRAFTSTOP ON 2x4's NAILED FLAT TO TRUSS JOISTS @ 2'-0" o.c.
TYPICAL ROOF CONST
• BUILT UP COAL TAR PITCH W/ GRAVEL
• 3/4" T&G PLYWOOD SHEATHING
• ROOF TRUSSES 32" o.c.
PARAPET DTL 16/26
4'-0"
13'-9"
9'-9"
8'-6"
NATURAL GRADE
MATH ROOM E46
STUDENT LAB & RESOURCE E40
• 2'x4' CEILING ACOUSTIC PANELS IN EXPOSED TEE SUSPENSION SYSTEM
• 5 1/4"x2'x4' INSULATION BATTS LAID IN ABOVE CEILING PANELS
• REFER TO ELECT SHT. E-7 FOR CEIL'G GRID LAYOUT
GENERAL SCIENCE E37
• 4" CONC SLAB W/ 6x6 6/6 W.W.F.
• 2" SAND LEVELING COURSE
• VAPOR BARRIER
• 4" GRAVEL BASE
NG
TYP BEARING BLOCK WALL
• BOND BMS W/ TWO #4 BARS CONTINUOUS. SPACE AS DRAWN OR NOT TO EXCEED 48" o.c.
• 9 GA. TRUSSED HORIZ REINF @ MID COURSING BTWN BMS.
• REINF VERTICALLY W/ TWO #4's IN GROUTED CELLS 48" o.c. AND @ OPENINGS, CORNERS, AND FREE ENDS.

SECTION LOOKING EAST THRU MATH ~ SCIENCE BLDG

1/4" = 1'-0"

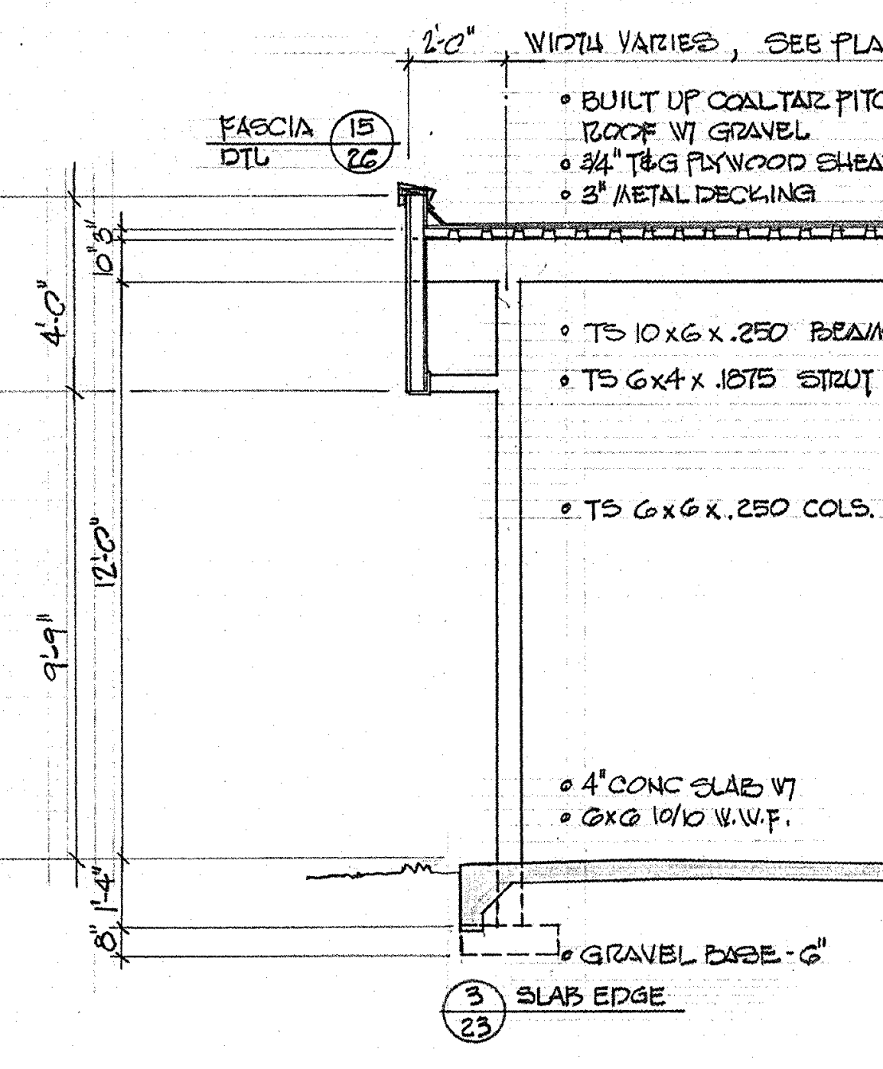
2'-0"
WIDTH VARIES, SEE PLANS
2'-0"
FASCIA DTL 15/26
• BUILT UP COALTAR PITCH ROOF W/ GRAVEL
• 3/4" T&G PLYWOOD SHEATHING
• 3" METAL DECKING
• TS 10x6x.250 BEAMS
• TS 6x4x.1875 STRUT
• TS 6x6x.250 COLS.
• 4" CONC SLAB W/ 6x6 10/10 W.W.F.
• GRAVEL BASE - 6"
0'-8"
4'-0"
12'-0"
9'-9"
1'-4"
8"
3/23 SLAB EDGE
4/23 ARCADE COL. FTG.

TYPICAL ARCADE

1/4" = 1'-0"

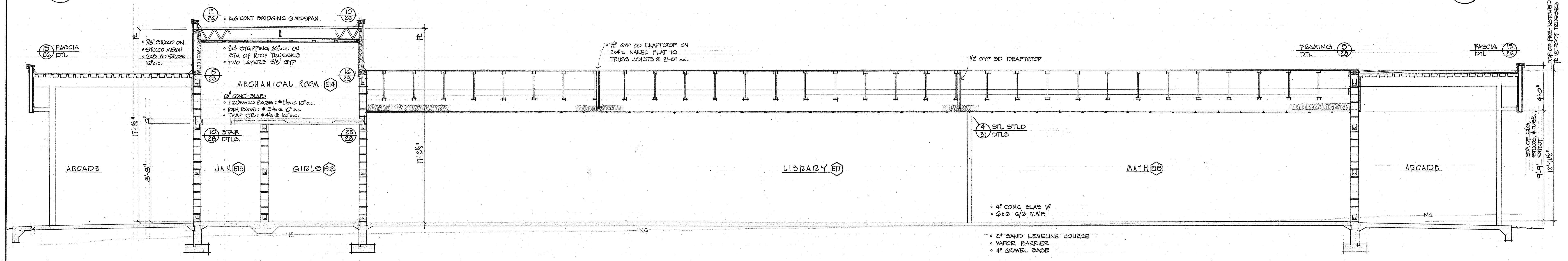
15/26 FASCIA DTL
12/26
• 2x6 CONT BRIDGING @ MIDSPAN
10/26
• 7/8" STUCCO ON
• STUCCO MESH
• 2x8 WD STUDS 16" o.c.
• 2x4 STRIPPING 24" o.c. ON BTM OF ROOF TRUSSES
• TWO LAYERS 5/8" GYP
15/28
MECHANICAL ROOM E14
16/28
6" CONC SLAB
• TRUSSED BARS: #5's @ 10" o.c.
• BTM BARS: #5's @ 10" o.c.
• TEMP STL: #4's @ 16" o.c.
10/28 STAIR DTLS.
25/28
17'-1 1/8"
8'-8"
17'-2 1/2"
ARCADE
JAN E13
GIRLS E12
• 1/2" GYP BD DRAFTSTOP ON 2x4's NAILED FLAT TO TRUSS JOISTS @ 2'-0" o.c.
1/2" GYP BD DRAFTSTOP
4/31 STL STUD DTLS
LIBRARY E17
MATH E18
• 4" CONC SLAB W/ 6x6 6/6 W.W.F.
• 2" SAND LEVELING COURSE
• VAPOR BARRIER
• 4" GRAVEL BASE
NG
FRAMING DTL 5/28
FASCIA DTL 15/26
TOP OF PRE-NOTCHED PL @ ROOF TRUSSES
BTM OF CLG, STUCCO, & TUBE STRUT
4'-0"
9'-9"
12'-11 1/2"
ARCADE

SECTION LOOKING EAST THRU LIBRARY ~ HOME ECONOMICS BLDG

1/4" = 1'-0"

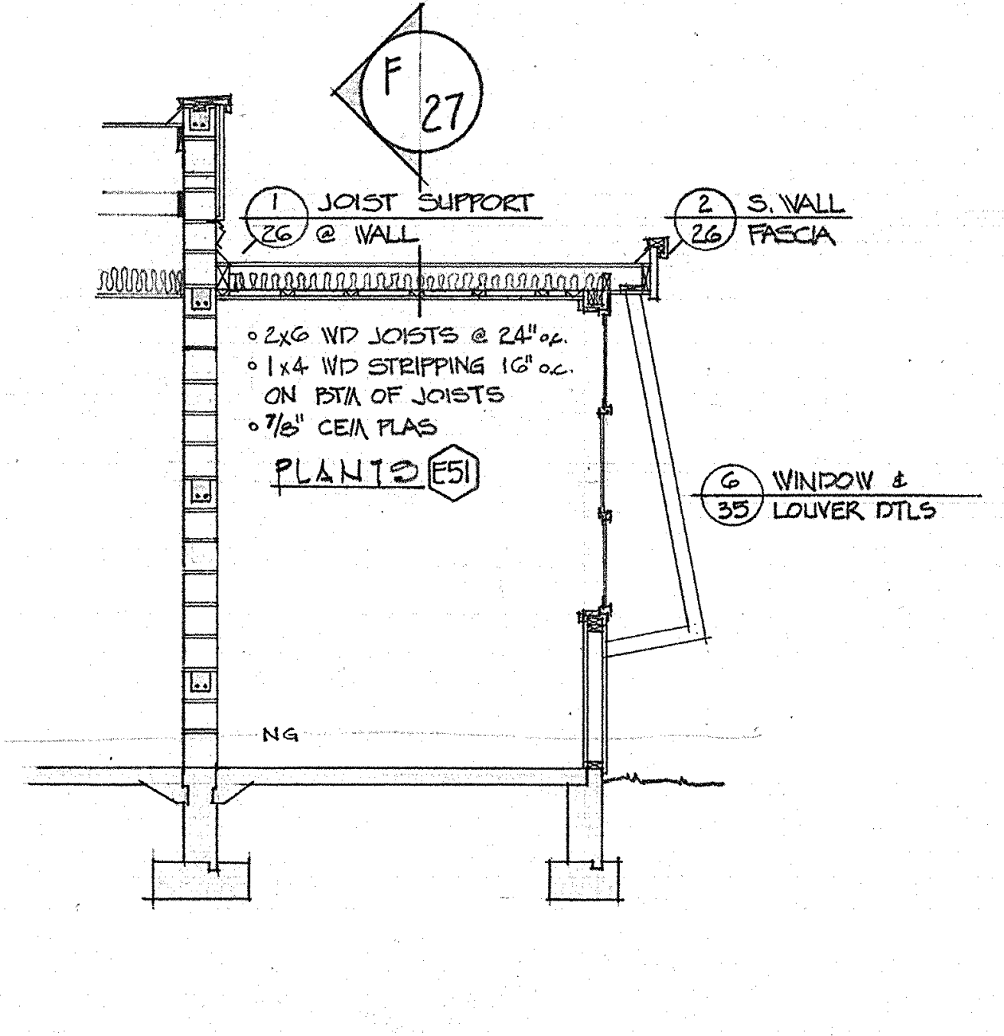
F 27
1/26 JOIST SUPPORT @ WALL
2/26 S. WALL FASCIA
• 2x6 WD JOISTS @ 24" o.c.
• 1x4 WD STRIPPING 16" o.c. ON BTM OF JOISTS
• 7/8" CEM PLAS
PLANTS E51
6/35 WINDOW & LOUVER DTLS
NG

LOOKING EAST THRU PLANT ROOM

E 27

1/4" = 1'-0"

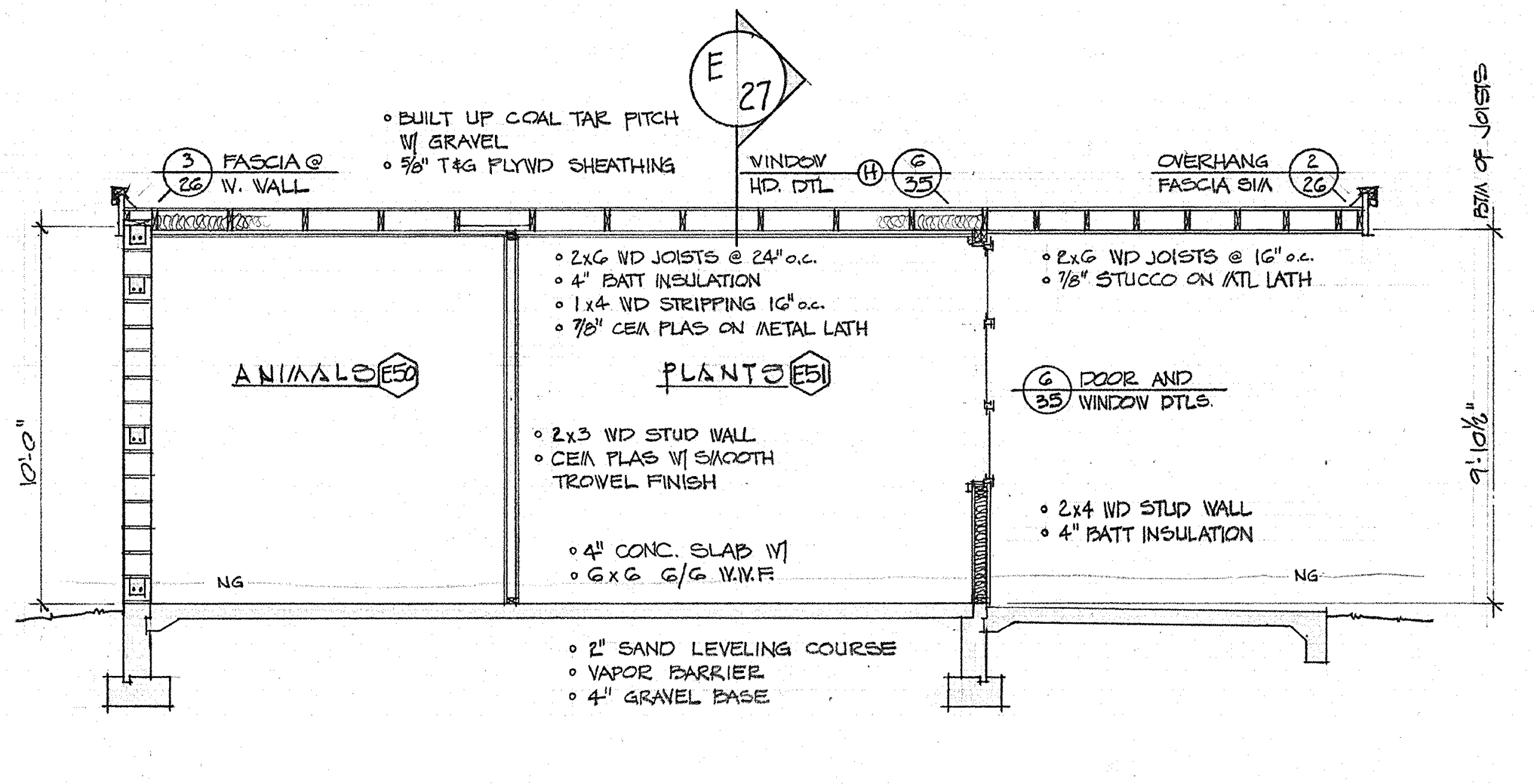
• BUILT UP COAL TAR PITCH W/ GRAVEL
• 5/8" T&G PLYWD SHEATHING
E 27
3/26 FASCIA @ W. WALL
WINDOW HD. DTL H 6/35
OVERHANG FASCIA SIM 2/26
BTM OF JOISTS
• 2x6 WD JOISTS @ 24" o.c.
• 4" BATT INSULATION
• 1x4 WD STRIPPING 16" o.c.
• 7/8" CEM PLAS ON METAL LATH
• 2x6 WD JOISTS @ 16" o.c.
• 7/8" STUCCO ON MTL LATH
10'-0"
ANIMALS E50
PLANTS E51
6/35 DOOR AND WINDOW DTLS.
9'-10 1/2"
• 2x3 WD STUD WALL
• CEM PLAS W/ SMOOTH TROWEL FINISH
• 2x4 WD STUD WALL
• 4" BATT INSULATION
• 4" CONC. SLAB W/ 6x6 6/6 W.W.F.
• 2" SAND LEVELING COURSE
• VAPOR BARRIER
• 4" GRAVEL BASE
NG

LOOKING NORTH THRU PLANT & ANIMAL ROOMS

F 27

1/4" = 1'-0"

SECTIONS - SECTOR E

SWEET HOME HIGH SCHOOL
ADDITIONS AND ALTERATIONS 1974
DISTRICT 55 LINN COUNTY, OREGON

ARCHITECTS
HAMLIN, MARTIN, SCHULTZ & GEYER
AIA
159 W. 12TH EUGENE, OREGON 97401

A
27
JOB NO.

REGISTERED ARCHITECT
CLARE K. HAMLIN
Clare K Hamlin
EUGENE, OREGON
STATE OF OREGON

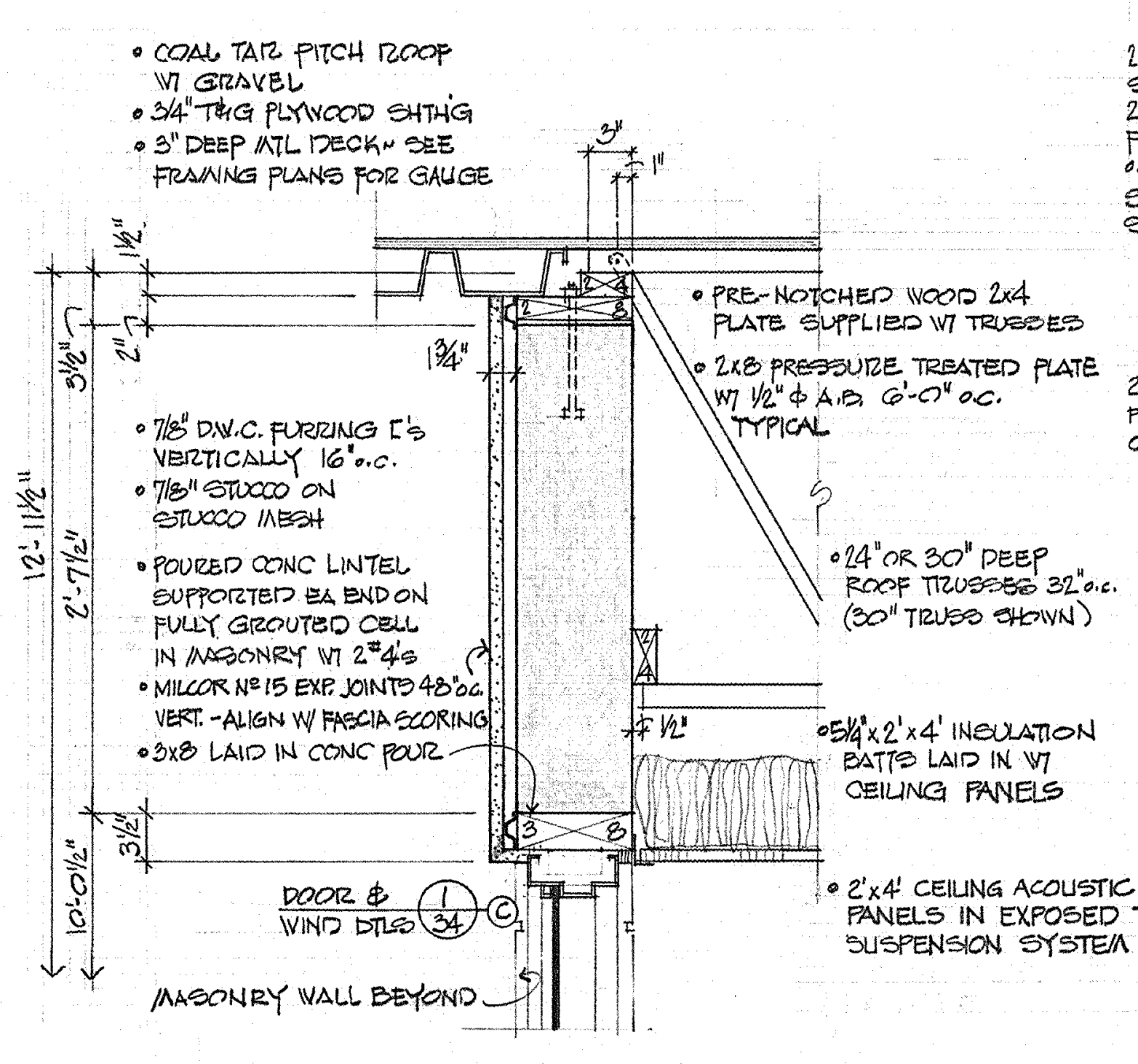
• COAL TAR PITCH ROOF W/ GRAVEL
• 3/4" T&G PLYWOOD SHTH'G
• 3" DEEP MTL DECK – SEE FRAMING PLANS FOR GAUGE
• PRE-NOTCHED WOOD 2x4 PLATE SUPPLIED W/ TRUSSES
• 2x8 PRESSURE TREATED PLATE W/ 1/2" ϕ A.B. 6'-0" o.c. TYPICAL
• 7/8" D.W.C. FURRING C's VERTICALLY 16" o.c.
• 7/8" STUCCO ON STUCCO MESH
• POURED CONC LINTEL SUPPORTED EA END ON FULLY GROUTED CELL IN MASONRY W/ 2 #4's
• MILCOR Nº 15 EXP. JOINTS 48" o.c. VERT. – ALIGN W/ FASCIA SCORING
• 3x8 LAID IN CONC POUR
• 24" OR 30" DEEP ROOF TRUSSES 32" o.c. (30" TRUSS SHOWN)
• 5 1/4" x 2' x 4' INSULATION BATTS LAID IN W/ CEILING PANELS
• 2' x 4' CEILING ACOUSTIC PANELS IN EXPOSED TEE SUSPENSION SYSTEM
DOOR & WIND DTLS 1/34 C
MASONRY WALL BEYOND
12'-11 1/2"
2'-7 1/2"
10'-0 1/2"
3 1/2"
1 3/4"

1/28 LINTEL @ LEVEL PERIMETER WALL 1" = 1'-0"

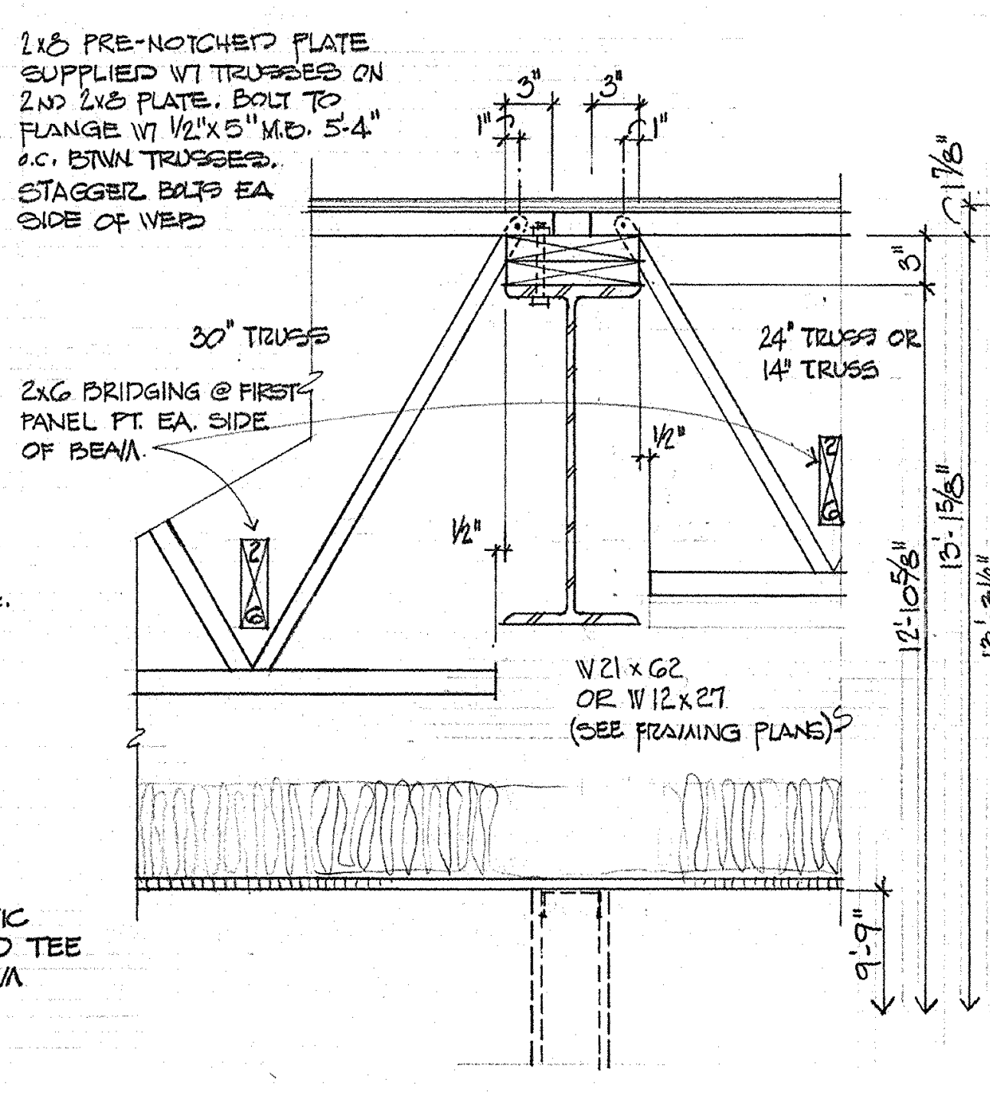
2x8 PRE-NOTCHED PLATE SUPPLIED W/ TRUSSES ON 2ND 2x8 PLATE. BOLT TO FLANGE W/ 1/2" x 5" M.B. 5'-4" o.c. BTWN TRUSSES. STAGGER BOLTS EA SIDE OF WEB
30" TRUSS
24" TRUSS OR 14" TRUSS
2x6 BRIDGING @ FIRST PANEL PT. EA. SIDE OF BEAM
W21 x 62 OR W12 x 27 (SEE FRAMING PLANS)
12'-10 5/8"
13'-1 5/8"
13'-3 1/2"
9'-9"

2/28 TRUSS SUPPORT @ STEEL BEAM 1" = 1'-0"

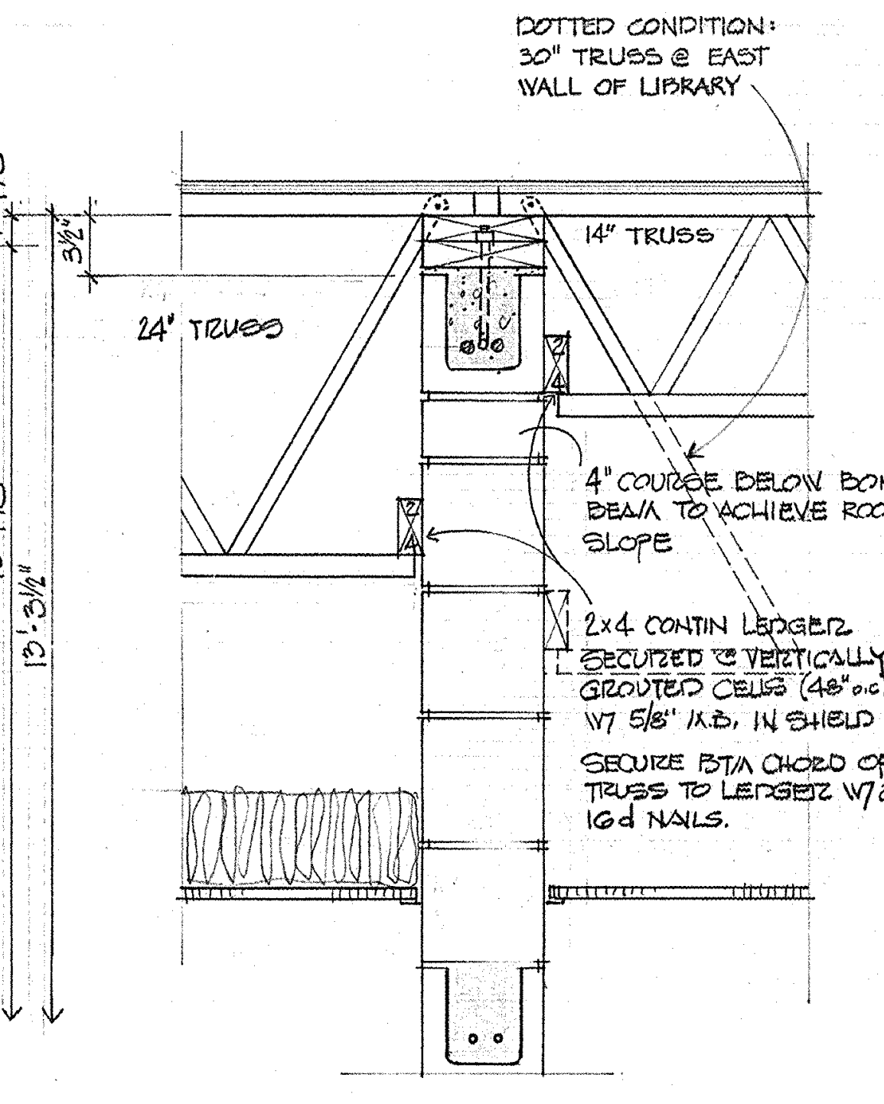
DOTTED CONDITION: 30" TRUSS @ EAST WALL OF LIBRARY
14" TRUSS
24" TRUSS
4" COURSE BELOW BOND BEAM TO ACHIEVE ROOF SLOPE
2x4 CONTIN LEDGER SECURED @ VERTICALLY GROUTED CELLS (48" o.c.) W/ 5/8" M.B. IN SHIELD
SECURE BTM CHORD OF TRUSS TO LEDGER W/ 2 16d NAILS.

3/28 TRUSS SUPPORT @ CORRIDOR WALL 1" = 1'-0"

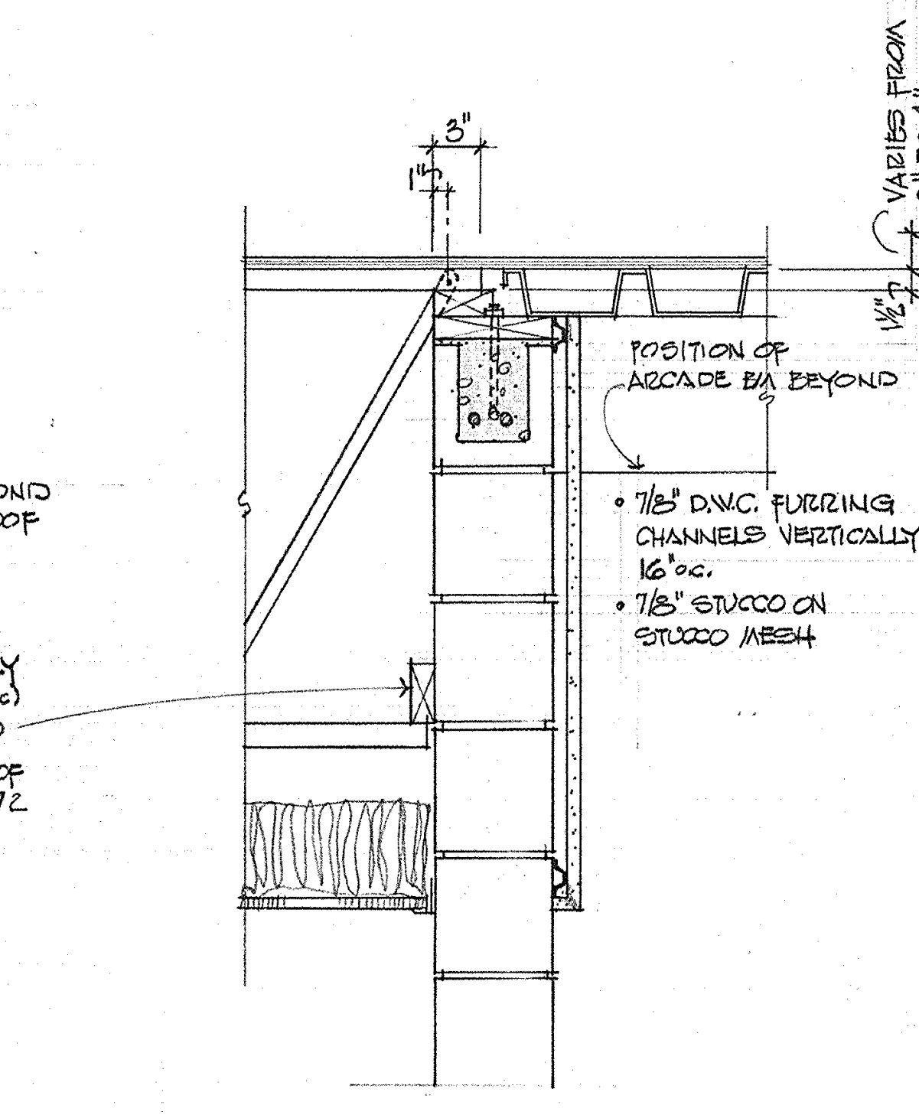
POSITION OF ARCADE BM BEYOND
• 7/8" D.W.C. FURRING CHANNELS VERTICALLY 16" o.c.
• 7/8" STUCCO ON STUCCO MESH
VARIES FROM 0" TO 4"
12'-11 1/2"
9'-9"

4/28 ROOF @ LEVEL PERIMETER WALL 1" = 1'-0"

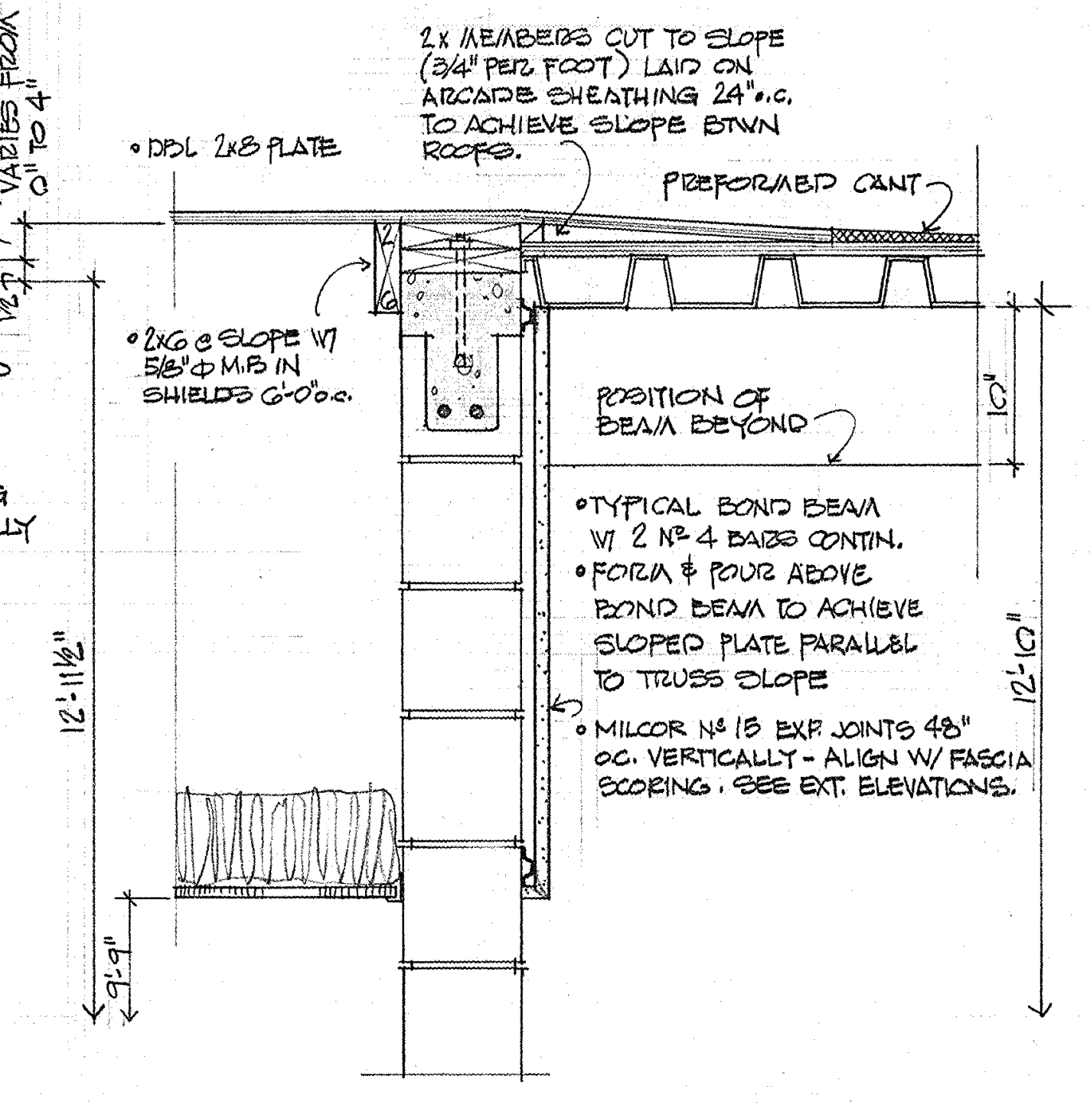
• DBL 2x8 PLATE
2x MEMBERS CUT TO SLOPE (3/4" PER FOOT) LAID ON ARCADE SHEATHING 24" o.c. TO ACHIEVE SLOPE BTWN ROOFS.
PREFORMED CANT
• 2x6 @ SLOPE W/ 5/8" ϕ M.B IN SHIELDS 6'-0" o.c.
POSITION OF BEAM BEYOND
• TYPICAL BOND BEAM W/ 2 Nº 4 BARS CONTIN.
• FORM & POUR ABOVE BOND BEAM TO ACHIEVE SLOPED PLATE PARALLEL TO TRUSS SLOPE
• MILCOR Nº 15 EXP. JOINTS 48" o.c. VERTICALLY – ALIGN W/ FASCIA SCORING. SEE EXT. ELEVATIONS.
12'-10"

5/28 ROOF @ SLOPED PERIMETER WALL 1" = 1'-0"

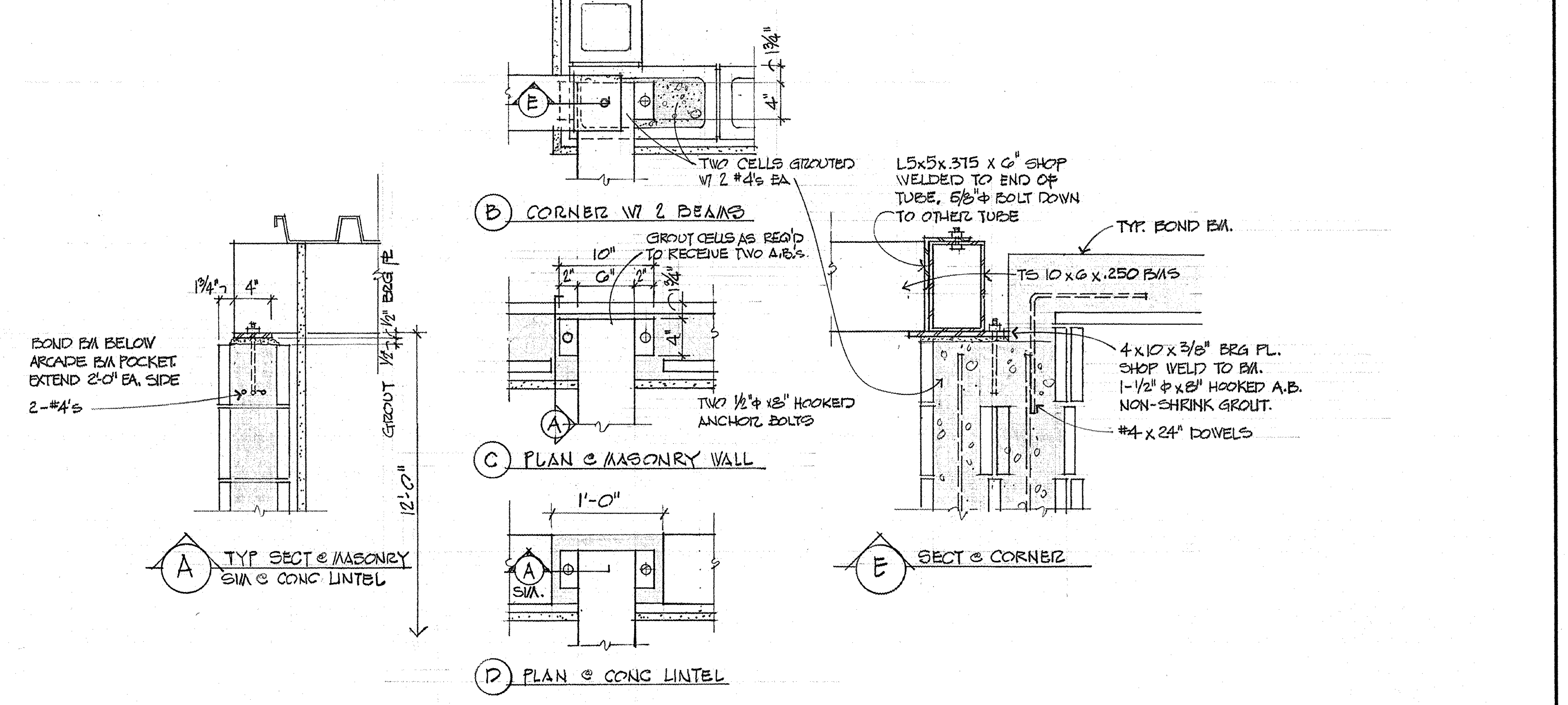
BOND BM BELOW ARCADE BM POCKET. EXTEND 2'-0" EA. SIDE
2-#4's
GROUT 1 1/2" BRG PL
12'-0"
A TYP SECT @ MASONRY SIM @ CONC LINTEL
TWO CELLS GROUTED W/ 2 #4's EA
B CORNER W/ 2 BEAMS
GROUT CELLS AS REQ'D TO RECEIVE TWO A.B.'s
TWO 1/2" ϕ x 8" HOOKED ANCHOR BOLTS
C PLAN @ MASONRY WALL
SIM.
D PLAN @ CONC LINTEL
L5x5x.375 x 6" SHOP WELDED TO END OF TUBE, 5/8" ϕ BOLT DOWN TO OTHER TUBE
TYP. BOND BM.
TS 10 x 6 x .250 BMS
4 x 10 x 3/8" BRG PL. SHOP WELD TO BM. 1-1/2" ϕ x 8" HOOKED A.B. NON-SHRINK GROUT.
#4 x 24" DOWELS
E SECT @ CORNER

6/28 ARCADE BM SUPPORT @ MASONRY WALLS & CONCRETE LINTELS 1" = 1'-0"

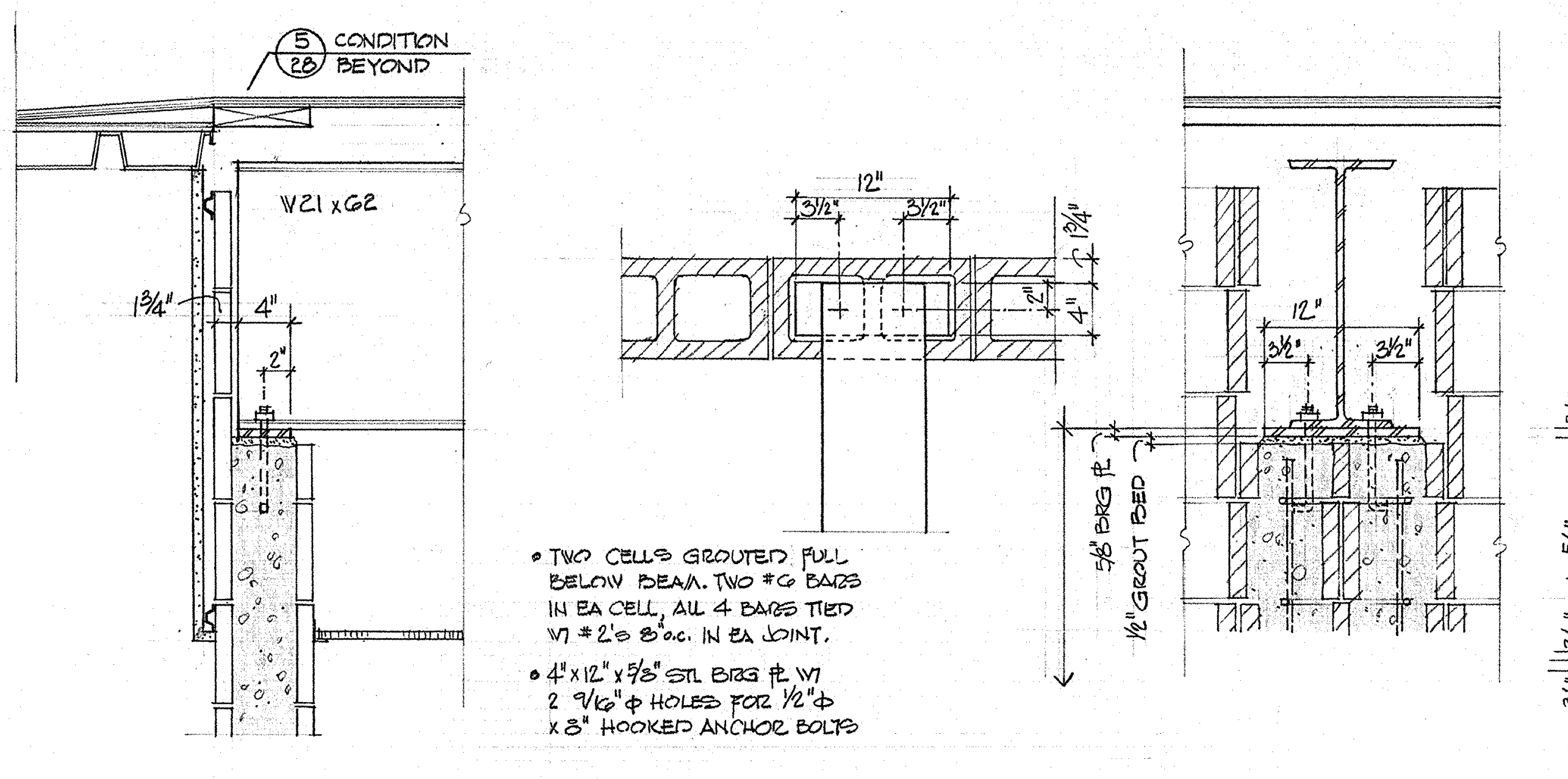
5/28 CONDITION BEYOND
W21 x 62
• TWO CELLS GROUTED FULL BELOW BEAM. TWO #6 BARS IN EA CELL, ALL 4 BARS TIED W/ #2's 8" o.c. IN EA JOINT.
• 4" x 12" x 5/8" STL BRG PL W/ 2 9/16" ϕ HOLES FOR 1/2" ϕ x 8" HOOKED ANCHOR BOLTS
5/8" BRG PL
1/2" GROUT BED

7/28 STEEL BEAM SUPPORT IN MASONRY WALLS 1" = 1'-0"

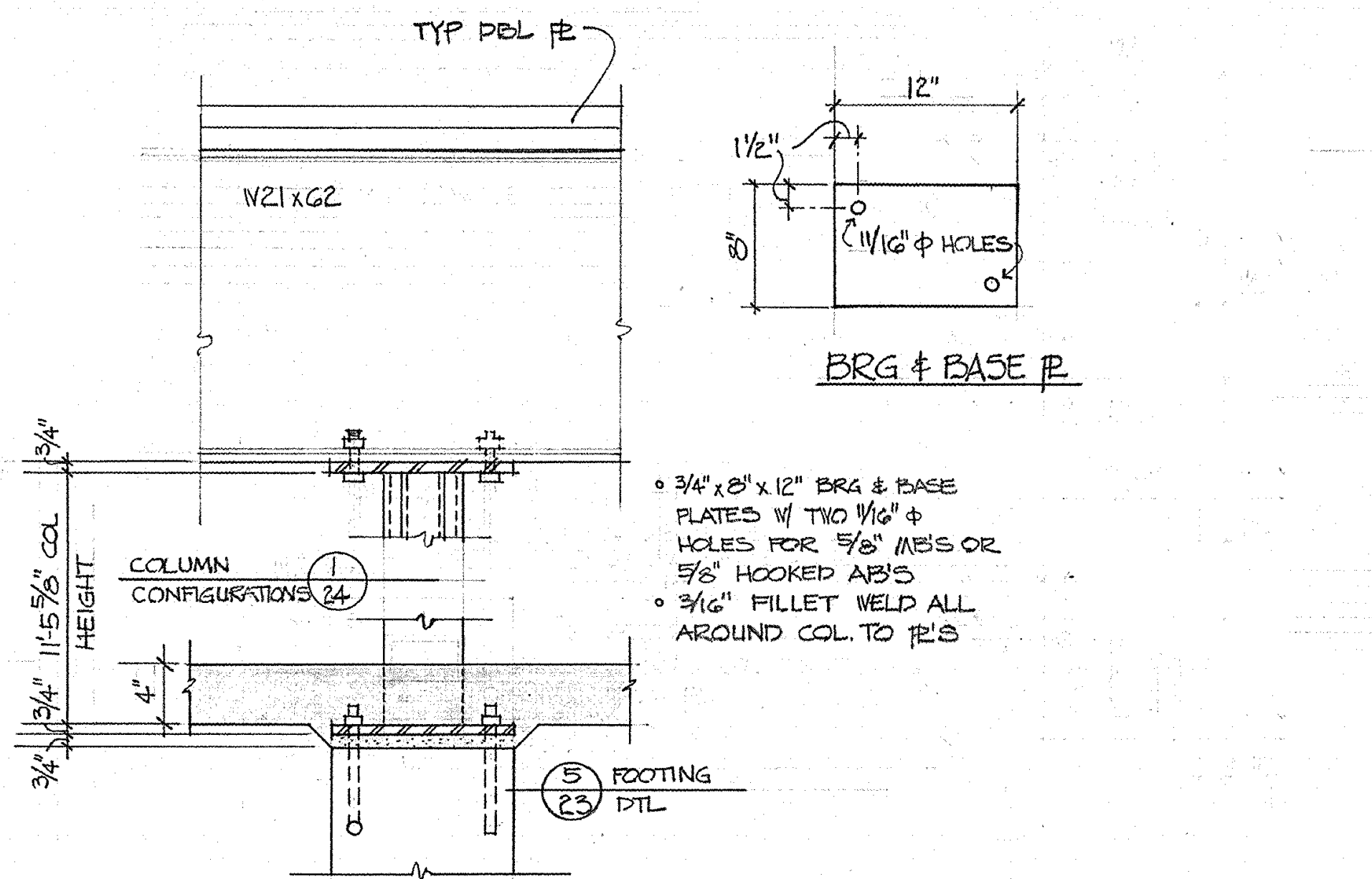
TYP DBL PL
W21 x 62
BRG & BASE PL
11/16" ϕ HOLES
COLUMN CONFIGURATIONS 1/24
11'-5 5/8" COL HEIGHT
5/23 FOOTING DTL
• 3/4" x 8" x 12" BRG & BASE PLATES W/ TWO 11/16" ϕ HOLES FOR 5/8" MB'S OR 5/8" HOOKED AB'S
• 3/16" FILLET WELD ALL AROUND COL. TO PL'S

8/28 STEEL BEAM SUPPORT @ COLUMNS 1" = 1'-0"

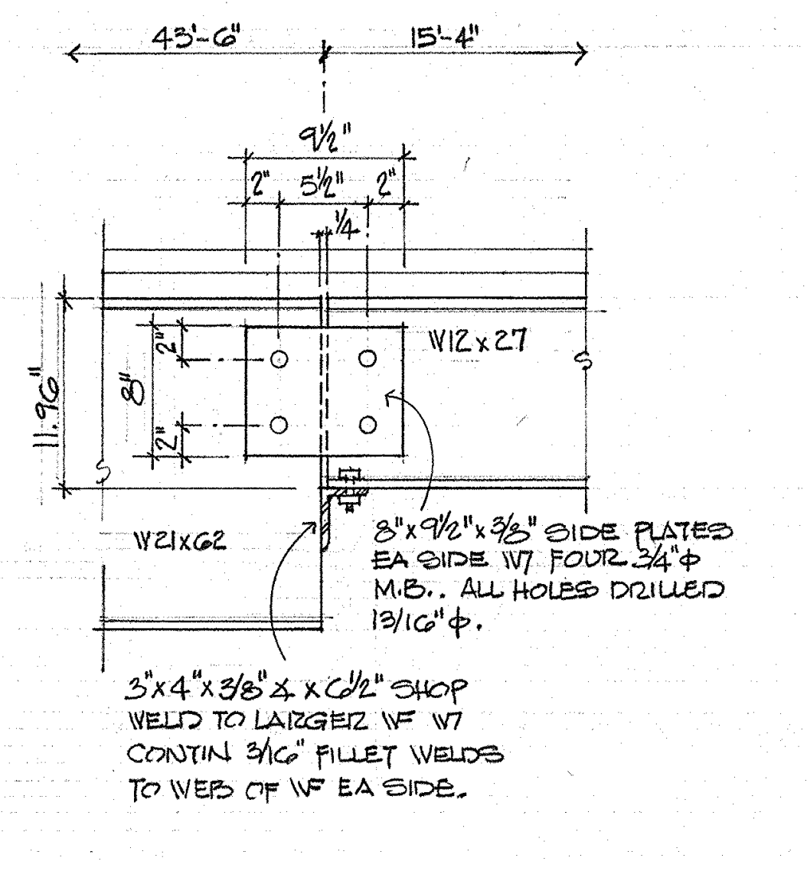
43'-6"
15'-4"
W12 x 27
W21x62
11.96"
8"x9 1/2"x3/8" SIDE PLATES EA SIDE W/ FOUR 3/4" ϕ M.B.. ALL HOLES DRILLED 13/16" ϕ.
3"x4"x3/8" ∠ x 6 1/2" SHOP WELD TO LARGER WF W/ CONTIN 3/16" FILLET WELDS TO WEB OF WF EA SIDE.

9/28 BEAM TO BEAM SUPPORT 1" = 1'-0"

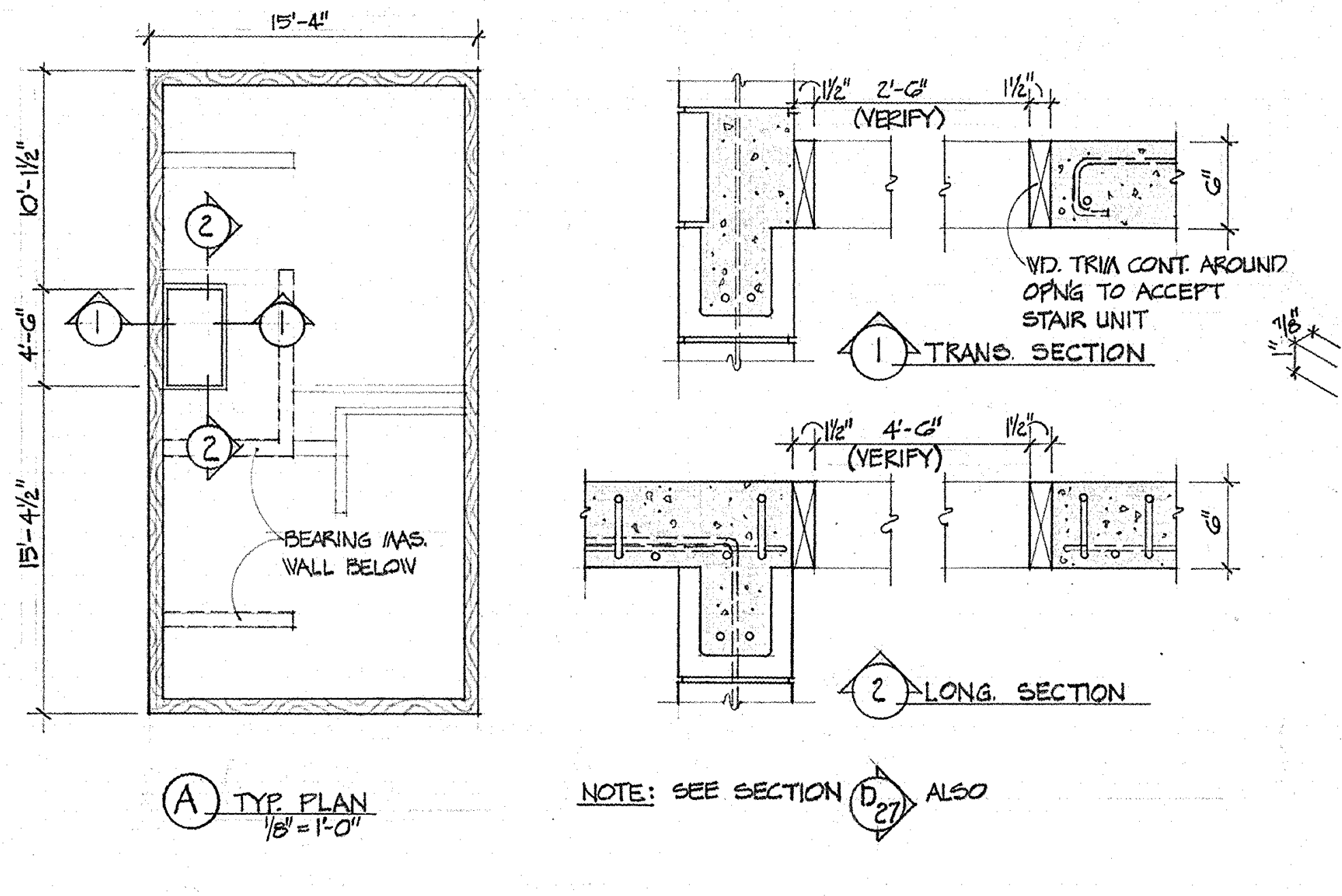
15'-4"
BEARING MAS. WALL BELOW
A TYP. PLAN 1/8" = 1'-0"
WD. TRIM CONT. AROUND OPN'G TO ACCEPT STAIR UNIT
1 TRANS. SECTION
2 LONG. SECTION
(VERIFY)

NOTE: SEE SECTION D/27 ALSO

10/28 FOLDING STAIR FRAMING @ MECH. RMS. E14 & E33 1" = 1'-0"

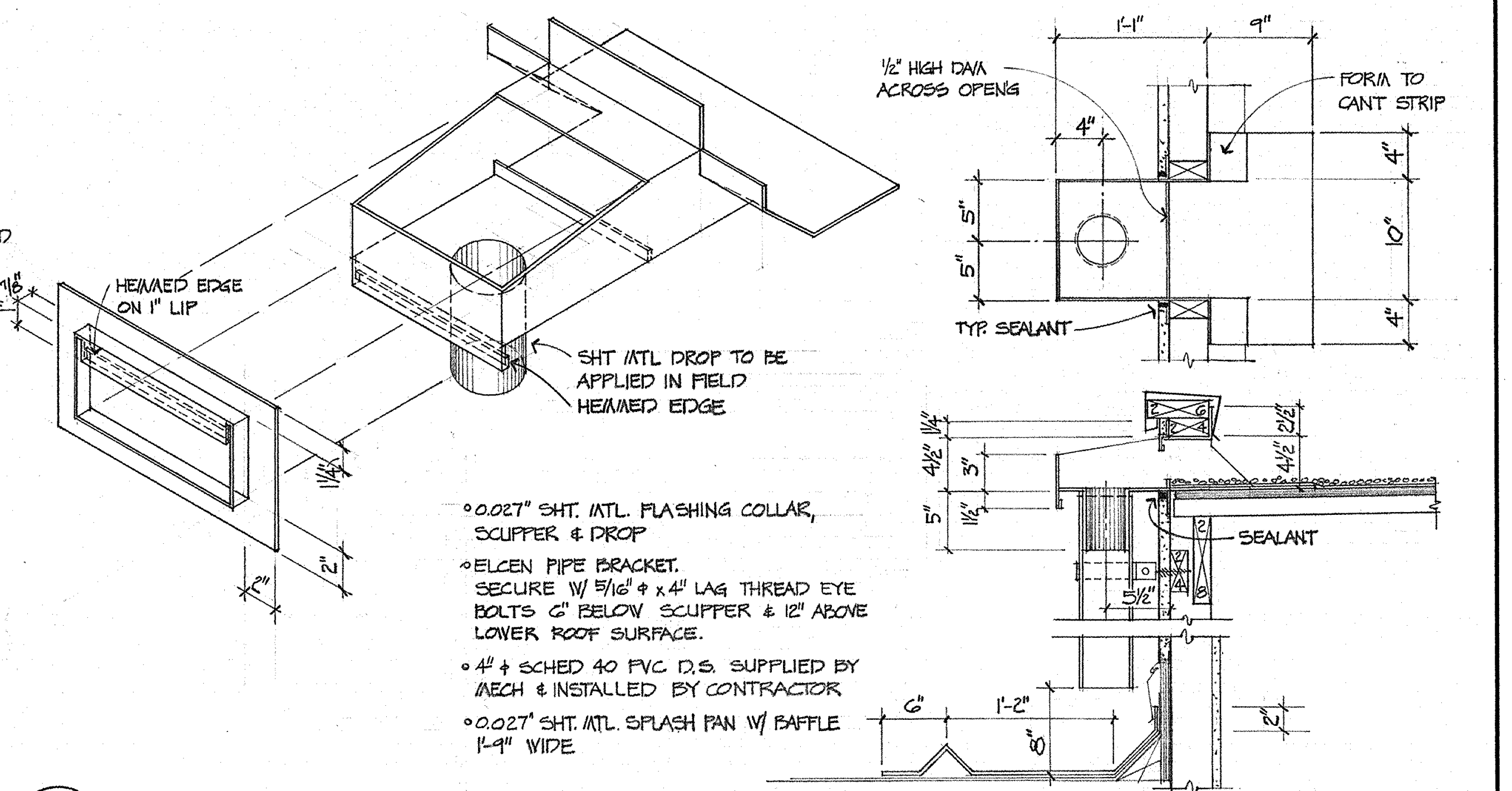
HEMMED EDGE ON 1" LIP
SHT MTL DROP TO BE APPLIED IN FIELD HEMMED EDGE
1/2" HIGH DAM ACROSS OPEN'G
FORM TO CANT STRIP
TYP. SEALANT
SEALANT

- 0.027" SHT. MTL. FLASHING COLLAR, SCUPPER & DROP
- ELCEN PIPE BRACKET. SECURE W/ 5/16" ϕ x 4" LAG THREAD EYE BOLTS 6" BELOW SCUPPER & 12" ABOVE LOWER ROOF SURFACE.
- 4" ϕ SCHED 40 PVC D.S. SUPPLIED BY MECH & INSTALLED BY CONTRACTOR
- 0.027" SHT. MTL. SPLASH PAN W/ BAFFLE 1'-9" WIDE

11/28 SCUPPER & D.S. DETAILS @ MECH. RMS. E14 & E33 1" = 1'-0"

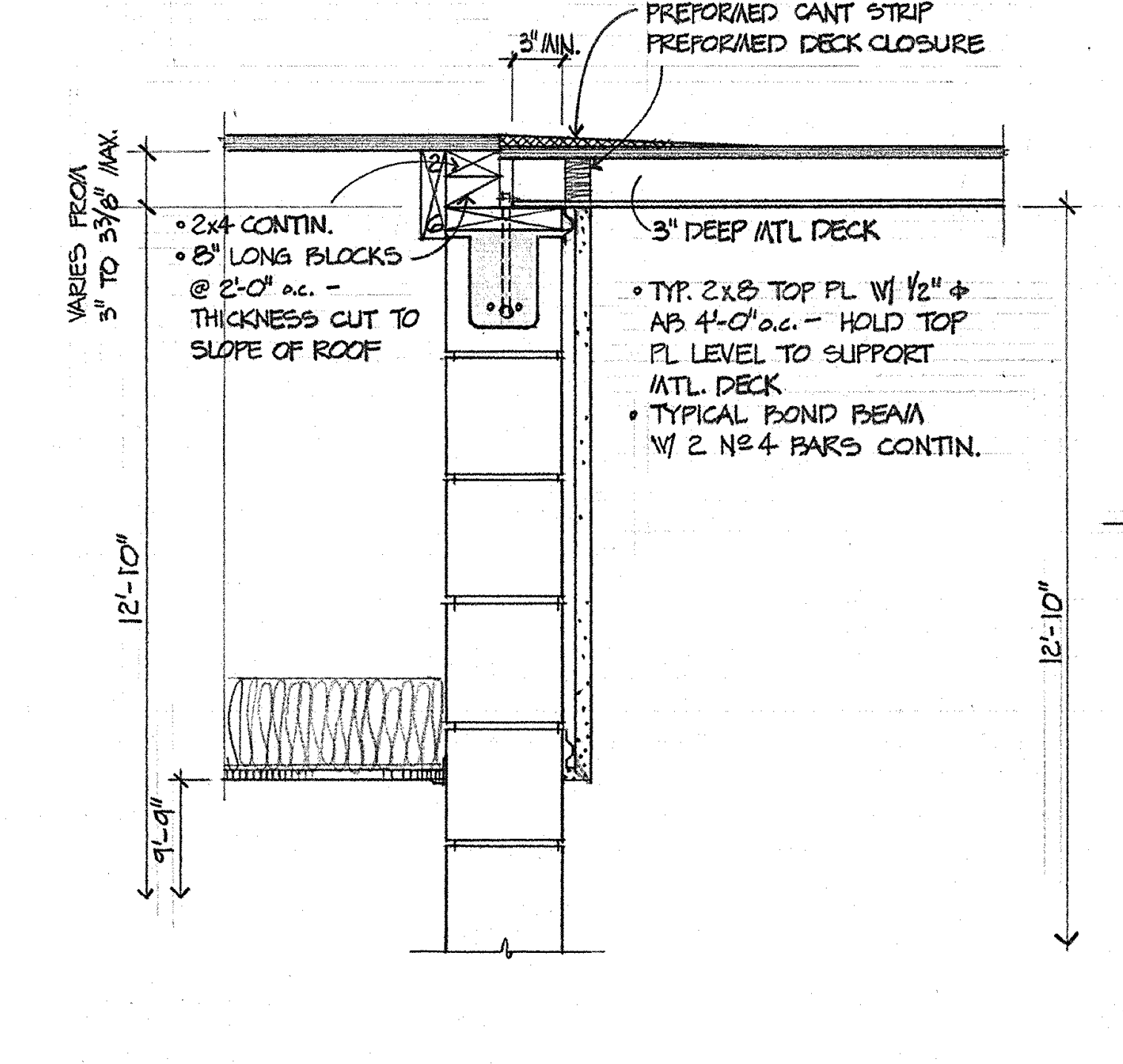
PREFORMED CANT STRIP PREFORMED DECK CLOSURE
3" MIN.
VARIES FROM 3" TO 3 3/8" MAX.
• 2x4 CONTIN.
• 8" LONG BLOCKS @ 2'-0" o.c. – THICKNESS CUT TO SLOPE OF ROOF
3" DEEP MTL DECK
• TYP. 2x8 TOP PL W/ 1/2" ϕ AB 4'-0" o.c. – HOLD TOP PL LEVEL TO SUPPORT MTL. DECK
• TYPICAL BOND BEAM W/ 2 Nº 4 BARS CONTIN.
12'-10"
9'-9"

12/28 ROOF @ SLOPED PERIMETER WALL 1" = 1'-0"

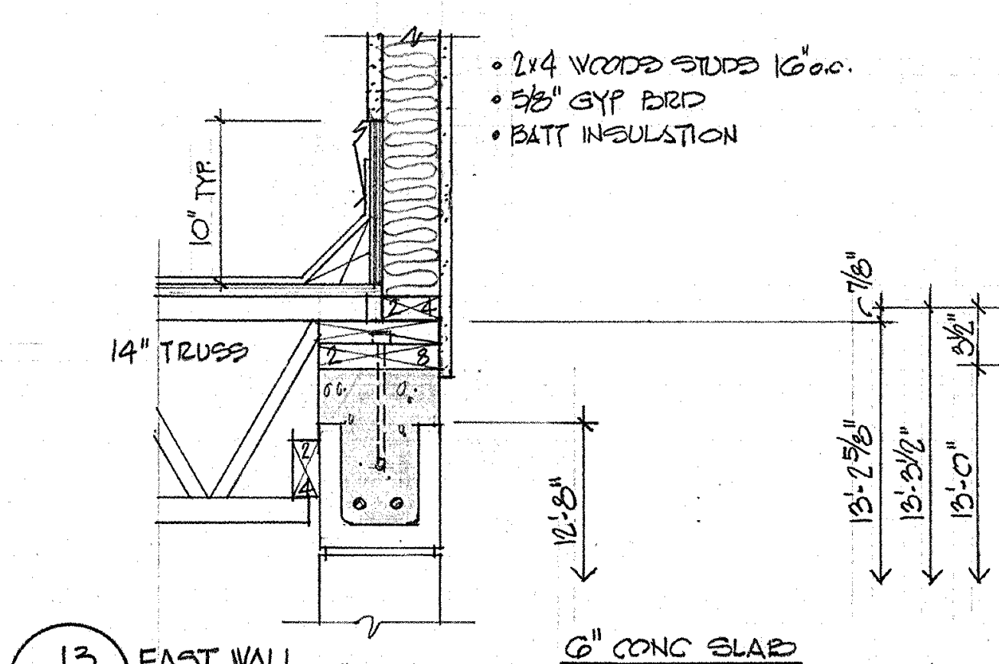
• 2x4 WOOD STUDS 16" o.c.
• 5/8" GYP BRD
• BATT INSULATION
10" TYP.
14" TRUSS
12'-8"
13'-2 5/8"
13'-3 1/2"
13'-0"

13/28 EAST WALL RM E33

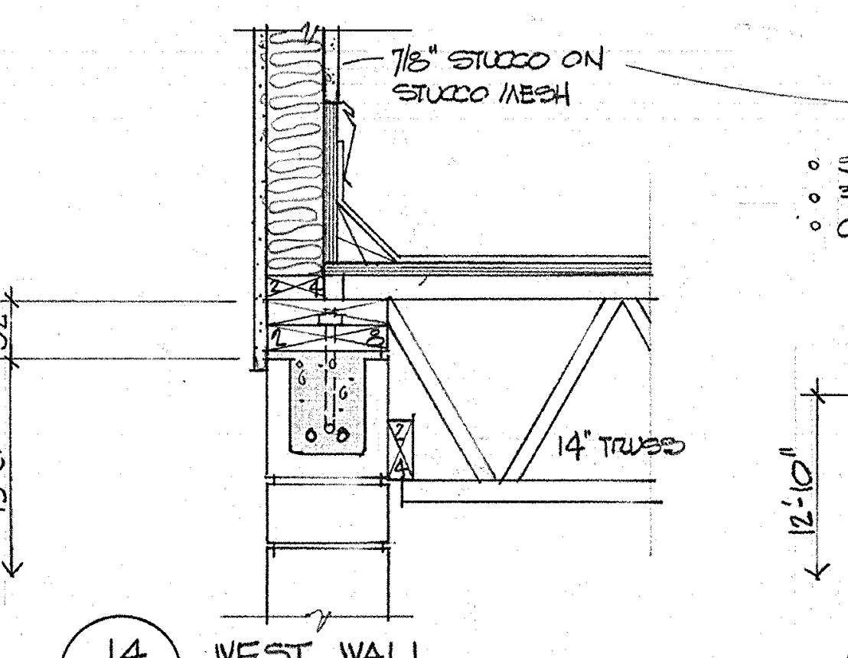
7/8" STUCCO ON STUCCO MESH
14" TRUSS

14/28 WEST WALL ROOM E33 1" = 1'-0"

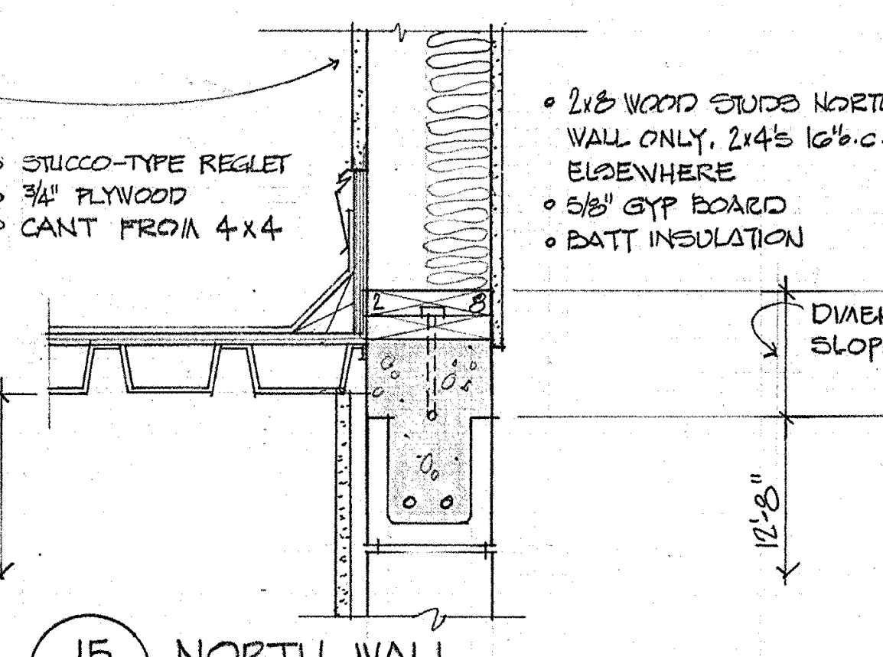
• STUCCO-TYPE REGLET
• 3/4" PLYWOOD
• CANT FROM 4x4
• 2x8 WOOD STUDS NORTH WALL ONLY, 2x4's 16" o.c. ELSEWHERE
• 5/8" GYP BOARD
• BATT INSULATION
DIMEN. VARIES W/ SLOPE OF ROOF
12'-10"
12'-8"

15/28 NORTH WALL MECH RM E14 1" = 1'-0"

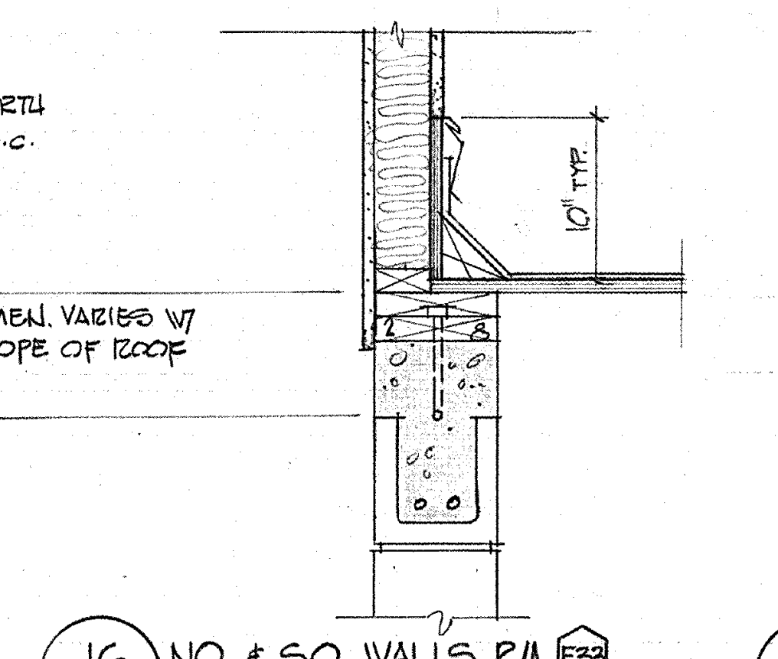

16/28 NO. & SO. WALLS RM. E33 SO. WALL RM E14 1" = 1'-0"

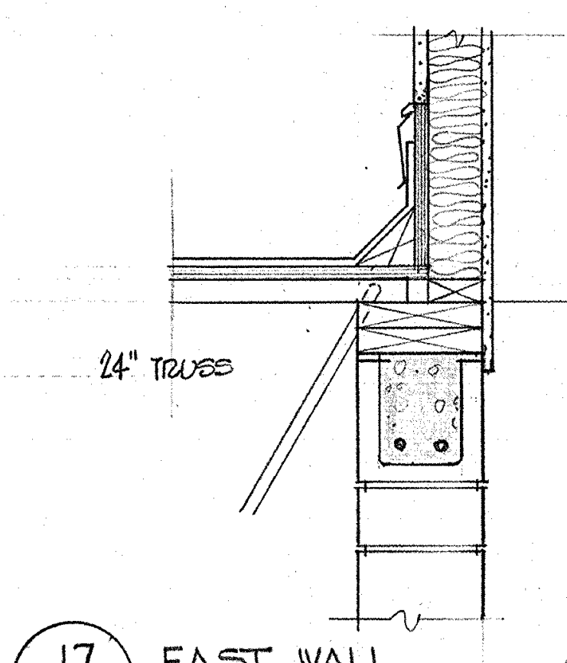

17/28 EAST WALL RM E14 1" = 1'-0"

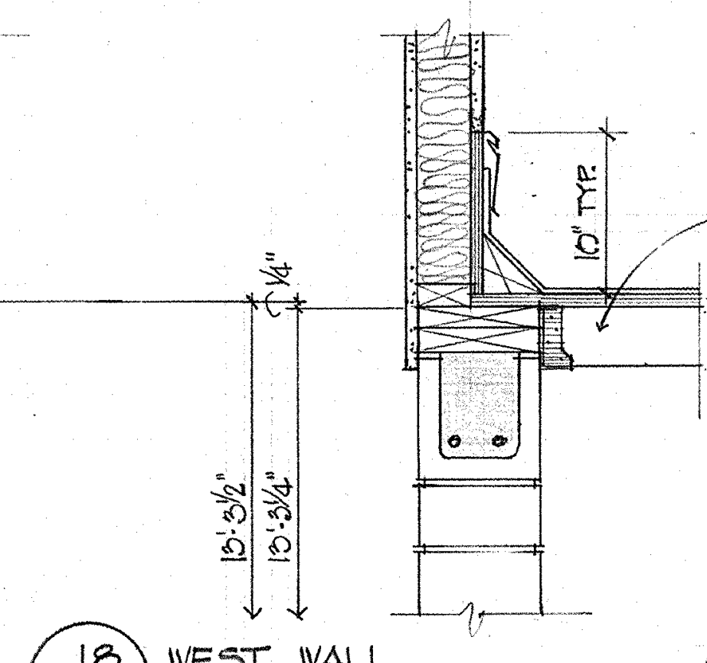
13'-3 1/2"
13'-3 3/4"
10" TYP.

18/28 WEST WALL RM E14

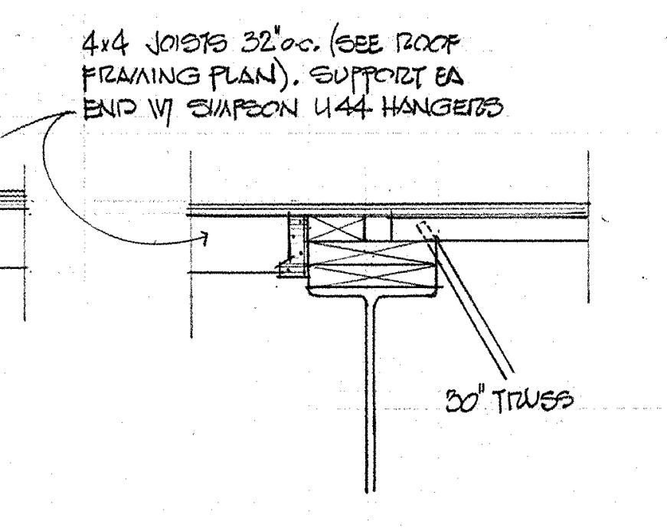
4x4 JOISTS 32" o.c. (SEE ROOF FRAMING PLAN). SUPPORT EA END W/ SIMPSON U44 HANGERS
30" TRUSS

19/28 NORTH-SOUTH BM OVER CONF RM E16 1" = 1'-0"

20/28 UNASSIGNED

21/28 UNASSIGNED

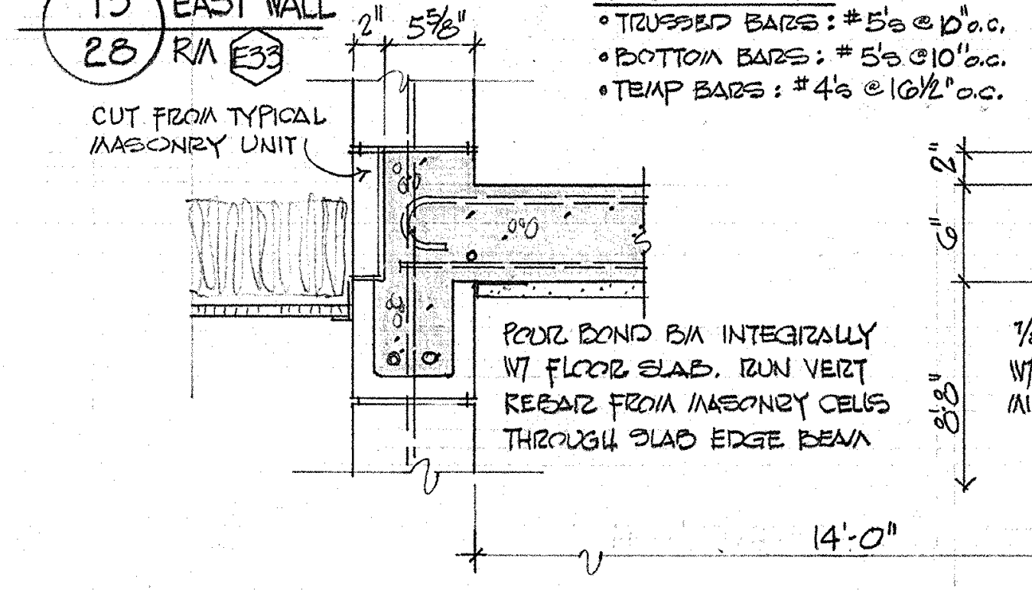
CUT FROM TYPICAL MASONRY UNIT
6" CONC SLAB
• TRUSSED BARS: #5's @ 10" o.c.
• BOTTOM BARS: #5's @ 10" o.c.
• TEMP BARS: #4's @ 16 1/2" o.c.
POUR BOND BM INTEGRALLY W/ FLOOR SLAB. RUN VERT REBAR FROM MASONRY CELLS THROUGH SLAB EDGE BEAM
14'-0"

22/28 EAST WALL RM E33 1" = 1'-0"

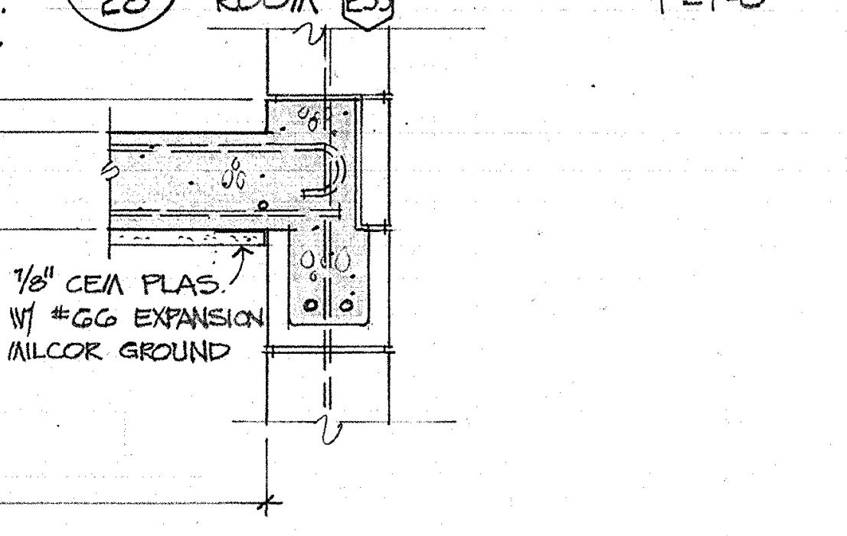
7/8" CEM PLAS. W/ #66 EXPANSION MILCOR GROUND
8'-8"

23/28 WEST WALL RM E33 1" = 1'-0"

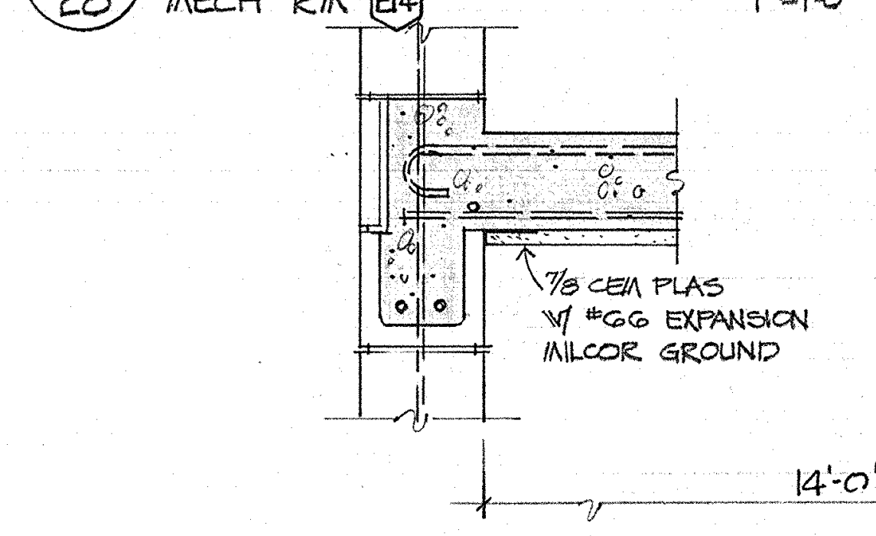
7/8 CEM PLAS W/ #66 EXPANSION MILCOR GROUND
14'-0"

24/28 NORTH WALL MECH RM E14 1" = 1'-0"

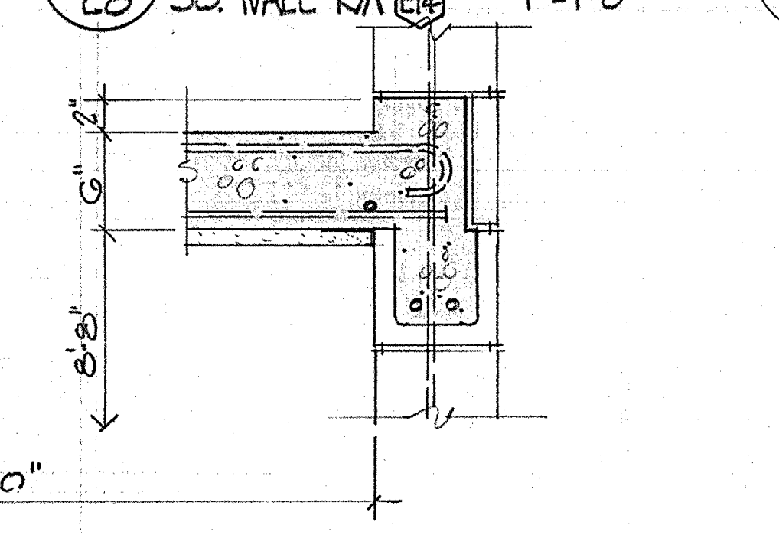

25/28 SOUTH WALL RM E14 1" = 1'-0"

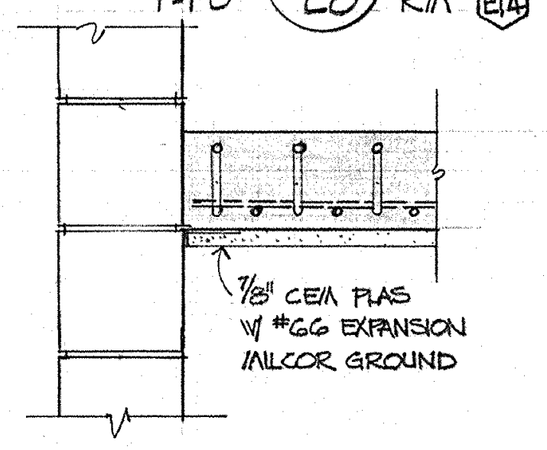
7/8" CEM PLAS W/ #66 EXPANSION MILCOR GROUND

26/28 EAST WALL RM E14 WEST WALL RM E14 1" = 1'-0"

FRAMING DETAILS - SECTOR E
SWEET HOME HIGH SCHOOL
ADDITIONS AND ALTERATIONS 1974
DISTRICT 55 LINN COUNTY, OREGON

ARCHITECTS
HAMLIN, MARTIN, SCHULTZ & GEYER
AIA
159 W. 12TH EUGENE, OREGON 97401

A
28
JOB NO.

CLARE K. HAMLIN
Clare K Hamlin
EUGENE, OREGON

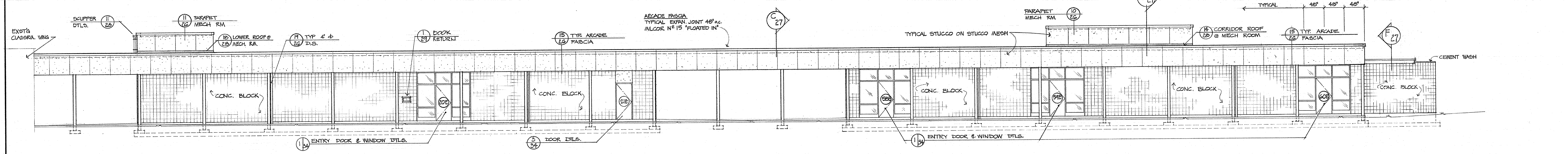
EXST'G CLASSRM. WING
SCUPPER DTLS. 11/28
11/26 PARAPET MECH RM
18/28 LOWER ROOF @ MECH. RM.
19/26 TYP 4" ⌀ D.S.
1/29 BOOK RETURN
15/26 TYP. ARCADE FASCIA
ARCADE FASCIA
TYPICAL EXPAN. JOINT 48" o.c.
MILCOR Nº 15 "FLOATED IN"
C/27
TYPICAL STUCCO ON STUCCO MESH
PARAPET MECH RM 10/26
A/27
14/28 CORRIDOR ROOF @ MECH ROOM
TYPICAL 48" 48" 48"
F/27
CEMENT WASH
CONC. BLOCK
20E
21E
58E
59E
60E
1/34 ENTRY DOOR & WINDOW DTLS.
3/34 DOOR DTLS.

1/29 WEST ELEVATION - SECTOR E 1/8" = 1'-0"

EQ. 48" 48"
PARAPET MECH. RM 10/26
A/27
11/28 SCUPPER DTLS
15/26 TYP. ARCADE FASCIA
F/27
SIM H
L
E
F G
K
63E
M
48" 48" EQ. 48" 48" 48"
17/28 LOWER ROOF @ MECH. ROOM
11/26 PARAPET MECH RM
CONC. BLOCK
27E
26E
25E
3E
2E
6/35 WINDOW, DR & SUN LOUVER DTLS
1/34 ENTRY DOOR & WINDOW DTLS.

2/29 EAST ELEVATION - SECTOR E 1/8" = 1'-0"

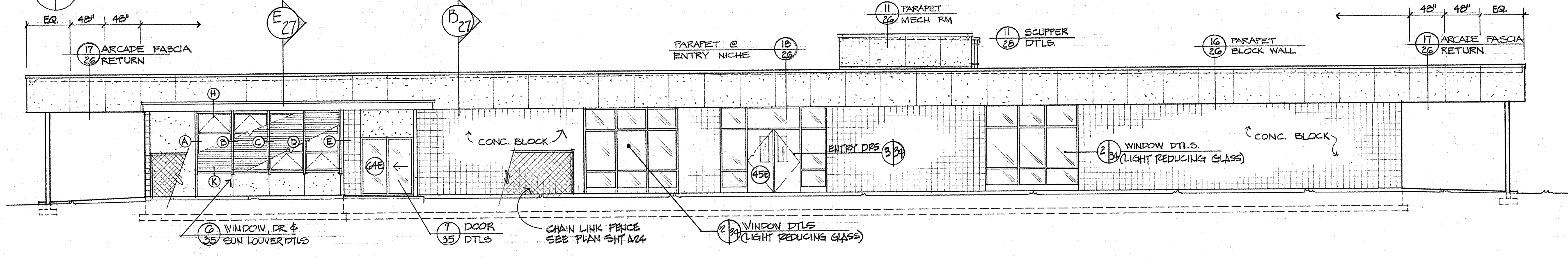
EQ. 48" 48"
17/26 ARCADE FASCIA RETURN
E/27
B/27
PARAPET @ ENTRY NICHE 18/26
11/26 PARAPET MECH RM
11/28 SCUPPER DTLS.
16/26 PARAPET BLOCK WALL
48" 48" EQ.
17/26 ARCADE FASCIA RETURN
H
A
B
C
D
E
K
64E
CONC. BLOCK
ENTRY DRS 3/34
45E
2/34 WINDOW DTLS. (LIGHT REDUCING GLASS)
6/35 WINDOW, DR & SUN LOUVER DTLS
7/35 DOOR DTLS
CHAIN LINK FENCE SEE PLAN SHT A24
2/34 WINDOW DTLS (LIGHT REDUCING GLASS)

3/29 SOUTH ELEVATION - MATH-SCIENCE BLDG - SECTOR E 1/8" = 1'-0"

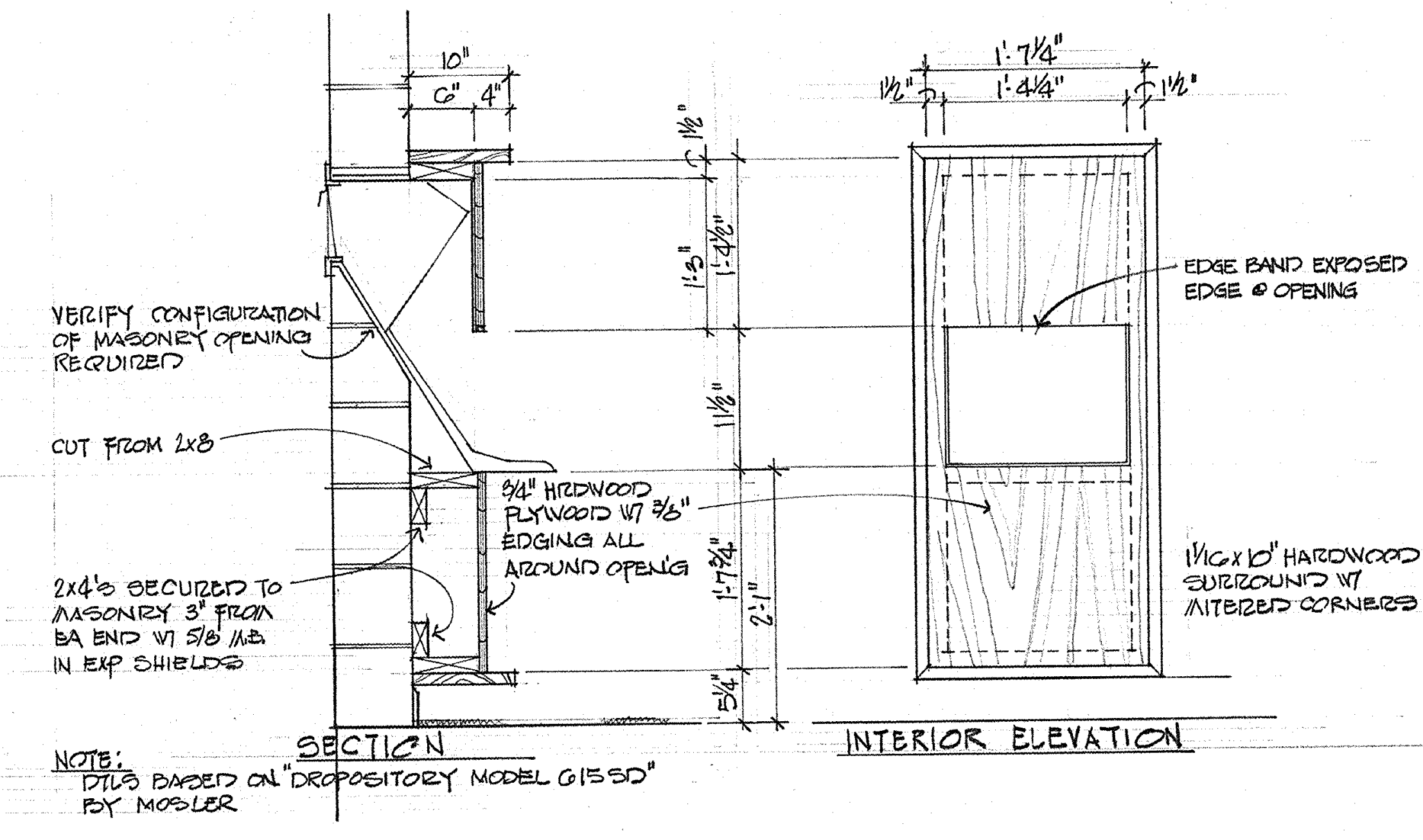
10"
6" 4"
1½"
1'-3"
1'-4½"
11⅛"
1'-7¾"
2'-1"
5¼"
VERIFY CONFIGURATION OF MASONRY OPENING REQUIRED
CUT FROM 2x8
¾" HRDWOOD PLYWOOD W/ ⅜" EDGING ALL AROUND OPEN'G
2x4's SECURED TO MASONRY 3" FROM EA END W/ 5/8 M.B. IN EXP SHIELDS
SECTION
1'-7¼"
1½"
1'-4¼"
1½"
EDGE BAND EXPOSED EDGE @ OPENING
1¹⁄₁₆x10" HARDWOOD SURROUND W/ MITERED CORNERS
INTERIOR ELEVATION

NOTE:
DTLS BASED ON "DROPOSITORY MODEL G155D" BY MOSLER

1/29 BOOK RETURN DEPOSITORY 3/4" = 1'-0"

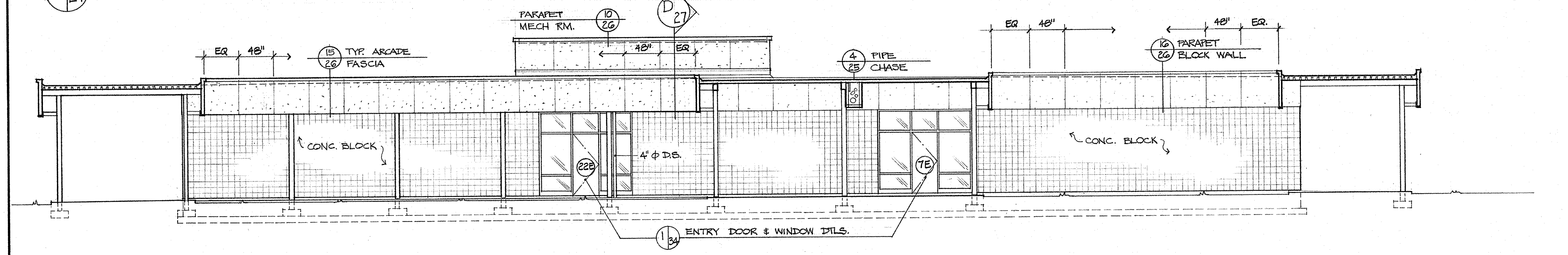
PARAPET MECH RM. 10/26
D/27
EQ 48"
15/26 TYP. ARCADE FASCIA
48" EQ
4/25 PIPE CHASE
EQ 48"
48" EQ.
16/26 PARAPET BLOCK WALL
CONC. BLOCK
4" ⌀ D.S.
22E
7E
1/34 ENTRY DOOR & WINDOW DTLS.

4/29 SOUTH ELEVATION - LIBRARY-HOME ECONOMICS BLDG - SECTOR E 1/8" = 1'-0"

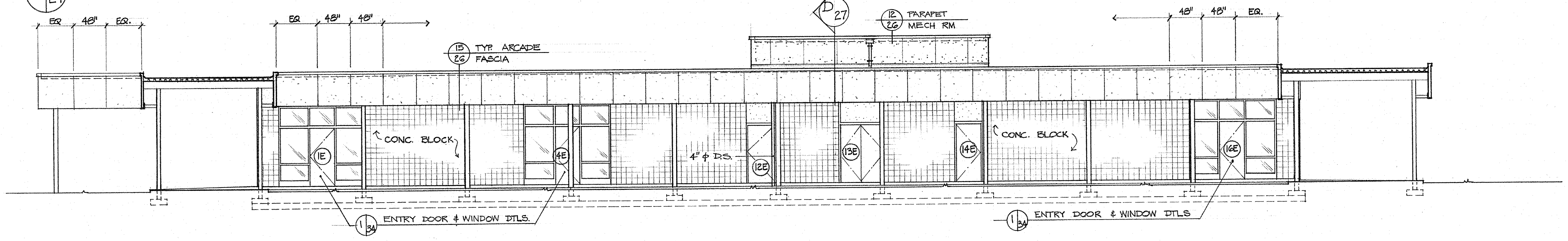
EQ 48" EQ.
EQ 48" 48"
15/26 TYP. ARCADE FASCIA
D/27
12/26 PARAPET MECH RM
48" 48" EQ.
CONC. BLOCK
4" ⌀ D.S.
1E
4E
12E
13E
14E
16E
1/34 ENTRY DOOR & WINDOW DTLS.
1/34 ENTRY DOOR & WINDOW DTLS

5/29 NORTH ELEVATION - LIBRARY-HOME ECONOMICS BLDG - SECTOR E 1/8" = 1'-0"

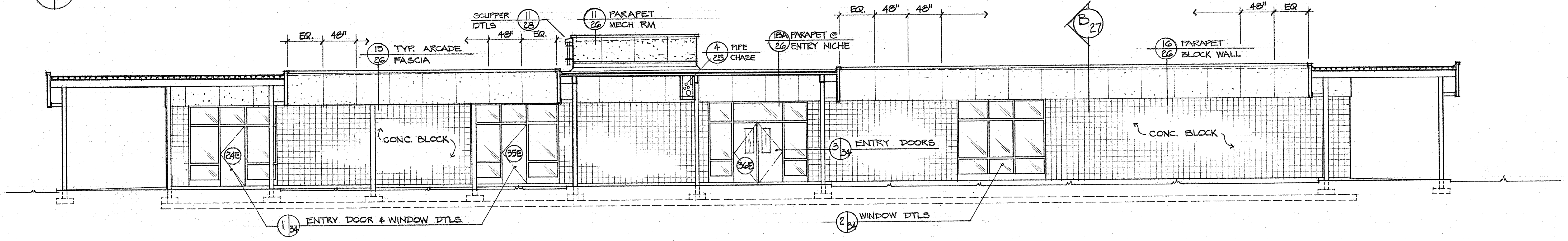
SCUPPER DTLS 11/28
11/26 PARAPET MECH RM
EQ. 48"
15/26 TYP. ARCADE FASCIA
48" EQ.
4/25 PIPE CHASE
18A/26 PARAPET @ ENTRY NICHE
EQ. 48" 48"
B/27
16/26 PARAPET BLOCK WALL
48" EQ
CONC. BLOCK
24E
35E
36E
3/34 ENTRY DOORS
1/34 ENTRY DOOR & WINDOW DTLS.
2/34 WINDOW DTLS

6/29 NORTH ELEVATION - MATH-SCIENCE BLDG - SECTOR E 1/8" = 1'-0"

EXTERIOR ELEVATIONS - SECTOR E
SWEET HOME HIGH SCHOOL
ADDITIONS AND ALTERATIONS 1974
DISTRICT 55 LINN COUNTY, OREGON

ARCHITECTS
HAMLIN, MARTIN,
SCHULTZ & GEYER
AIA
159 W. 12TH EUGENE, OREGON 97401

A
29
JOB NO.

CLARE K. HAMLIN
Clare K Hamlin
EUGENE, OREGON

ROOM FINISH SCHEDULE

SECTOR A

ROOM NAME	NO.	CEILINGS MATERIAL, HEIGHT, & APPLICATION-SEE ①			WALLS NORTH	EAST	SOUTH	WEST	FLOOR	BASE	ELEV	REMARKS
TICKET OFFICE	A1	AC TILE	9'-6"	B	HD. CT. PLAS.	HD. CT. PLAS.	HD. CT. PLAS.	HD. CT. PLAS.	CARPET ④	4" RBR	13/36	
COAT ROOM	A2	AC TILE *	10-5"	B	HD. CT. PLAS.	HD. CT. PLAS.	HD. CT. PLAS./OPEN	HD. CT. PLAS.	CARPET ④	4" RBR		*CEMENT FIBER PLANK CEILG IN EXIST. CORRIDOR TO BE REMOVED
FOYER	A3	AC TILE **	10-5"	B	HD. CT. PLAS.	HD. CT. PLAS.	EXIST'G. *	HD. CT. PLAS.	CARPET ④	4" RBR ⑥		*HD. CT. PLAS. & VINYL TACK BD. AT RECESSED OPENING - SEE FLOOR PLAN SHT. A-4 **CEM. FIBER PLANK CLG. REMOVED
GIRLS	A4	AC TILE	9'-6"	B	EPOXY COATING **	EPOXY COATING **	EPOXY COATING **	EPOXY COATING **	SHT. VINYL ⑤	SHT. VINYL *	1/36	*BASE TO BE SELF-COVING **EPOXY ON HD. CT. PLAS.
JANITOR	A5	EXST'G-PATCH AS REQ'D.			HD. CT. PLAS.	HD. CT. PLAS.	PATCH EXIST'G PLAS.	HD. CT. PLAS.	SHT. VINYL ⑤	4" RBR ⑥		CLEATS ABOVE MOP BASIN - SEE 16/35
BOYS	A6	AC TILE	9'-6"	B	EPOXY COATING **	EPOXY COATING **	EPOXY COATING **	EPOXY COATING **	SHT. VINYL ⑤	SHT. VINYL *	2/36	*BASE TO BE SELF-COVING **EPOXY ON HD. CT. PLAS.
PRACTICE ROOM	A7	AC TILE	11'-6"	B	HD. CT. PLAS.	HD. CT. PLAS.	PATCH EXIST'G PLAS.	HD. CT. PLAS.	CARPET ④	4" RBR ⑥		
PRACTICE ROOM	A8	AC TILE	11'-6"	B	HD. CT. PLAS.	HD. CT. PLAS.	HD. CT. PLAS.	HD. CT. PLAS.	CARPET ④	4" RBR		
OFFICE	A9	AC TILE	11'-6"	B	HD. CT. PLAS @ FILLED WNDW. 8/6	HD. CT. PLAS.	HD. CT. PLAS.	HD. CT. PLAS.	CARPET ④	4" RBR ⑥		
PRACTICE ROOM	A10	AC TILE	11'-6"	B	HD. CT. PLAS. @ FILLED WNDW. 8/6	HD. CT. PLAS.	HD. CT. PLAS.	HD. CT. PLAS.	CARPET ④	4" RBR ⑥		
PRACTICE ROOM	A11	AC TILE	11'-6"	B	HD. CT. PLAS @ FILLED WNDW. 8/6	HD. CT. PLAS.	HD. CT. PLAS.	HD. CT. PLAS	CARPET ④	4" RBR ⑥		
PRACTICE ROOM	A12	AC TILE	11'-6"	B	EXIST'G.	EXIST'G.	HD. CT. PLAS.	HD. CT. PLAS.	CARPET ④	4" RBR ⑥		
BAND ROOM	A13	EXST'G-PATCH AS REQ'D **			HD. CT. PLAS/AC TILE	PLAS. AT FILLED OPEN'G.	HD. CT. PLAS/AC TILE	HD. CT. PLAS. *	CARPET ④	4" RBR ⑥	3/33 14/36	*AC TILE ON WEST WALL OF ENTRY ABOVE DRS. 9A & 10A **FIBER PLANK CLG TO BE REMOVED FROM EXIST. COR. - PLASTER
INSTRUMENT STORAGE	A14	EXST'G-PATCH AS REQ'D *			HD. CT. PLAS	HD. CT. PLAS.	EXIST'G	MATCH PLAS. @ FILLED OPEN'G	CARPET ④	4" RBR ⑥	14/36	*CEM. FIBER PLANK CLG. IN EXIST. CORRIDOR TO BE REMOVED - PLASTER.
CORRIDOR	A15	AC TILE *	10-5"	B	PATCH EXIST'G. PLAS.	PATCH EXIST'G PLAS.	HD. CT. PLAS/OPEN	PLAS. AT FILLED OPEN'G	CARPET ④	4" RBR ⑥		*CEM. FIBER PLANK CLG. IN EXIST. CORRIDOR TO BE REMOVED
CORRIDOR	A16	AC TILE	11'-0"*	B	HD. CT. PLAS./OPEN	CEM. PLAS.	DOOR 23A	CEM. PLAS.	CARPET	4" RBR		*REMOVE EXIST'G 3/8" PLYWOOD CEIL'G.
STORAGE	A17	5/8" GYP. BD.	—	E	HD. CT. PLAS.	EXST'G	MATCH PLAS @ FILLED OPEN'G	BLOCK @ FILLED OPEN'G 19/33	EXST'G	4" RBR ⑥		*EXIST'G CEM. FIBER PLANK CLG TO BE REMOVED.
STORAGE	A18	EXIST'G.	—	—	EXIST'G.	EXIST'G	EXIST'G	EXIST'G.	EXIST'G	EXIST'G		
BOILER ROOM	A19	EXST'G	—	—	EXST'G.	EXST'G	MATCH PLAS. @ FILLED OPEN'G	DR. & GRILLE @ FILLED OPENING 5/35	EXST'G	EXIST'G		
LAUNDRY	A20	EXST'G	—	—	MATCH PLAS @ FILLED OPEN'G	EXST'G	EXST'G	EXST'G	EXST'G	EXST'G		
AUDITORIUM	A21	EXST'G	—	—	EXST'G.	EXST'G	EXST'G	EXST'G	CARPET *	EXST'G		*4'-0" STRIP DOWN AISLES - SEE FLOOR PLAN SHEET A-4
STAGE	A22	EXST'G	—	—	EXST'G.	EXST'G	MATCH PLAS. @ FILLED OPEN'G	EXST'G	EXST'G	EXST'G		
CHORAL ROOM	A23	EXST'G	—	—	MATCH PLAS @ FILLED OPEN'G	EXST'G	EXST'G	EXST'G	EXST'G	EXST'G		
OFFICE	A24	EXST'G	—	—	EXST'G.	EXST'G	EXST'G	EXST'G	EXST'G	EXST'G		
PRACTICE ROOM	A25	EXST'G	—	—	EXST'G.	EXST'G	EXST'G	EXST'G	EXST'G	EXST'G		
STORAGE	A26	PATCH PLAS. AT REMOVED WALLS	—	—	HD. CT. PLAS.	EXST'G/HD. CT. PLAS.	HD. CT. PLAS.	HD. CT. PLAS.	V.A. TILE ⑤	4" RBR. ⑥		
STAIRS	A27	OPEN/EXIST'G.	—	—	PLAS. AT FILLED OPEN'G.	MATCH PLAS @ FILLED OPEN'G	OPEN	HD. CT. PLAS.	WD. TREADS	NONE		
MECHANICAL ROOM	A28	5/8" GYP. BD.	—	E	5/8" GYP. BD.	5/8" GYP.	5/8" GYP. BD.	5/8" GYP. BD.	PLYWD.	NONE		
STORAGE	A29	5/8" GYP. BD. *	—	E	MATCH PLAS @ FILLED OPEN'G	EXST'G	HD. CT. PLAS.	EXST'G/BLOCK @ FILLED OPEN'G 5/35	EXST'G.	4" RBR. ⑥		*EXIST'G CEM. FIBER PLANK CLG TO BE REMOVED.

SECTOR B

ROOM NAME	NO.	CEILINGS MATERIAL, HEIGHT, & APPLICATION-SEE ①			WALLS NORTH	EAST	SOUTH	WEST	FLOOR	BASE	ELEV	REMARKS
ENGLISH	B1	AC. PANEL	9'-9"	A	MASONRY	MASONRY	VINYL TACK BD. 2/31	HD. CT. PLAS.	V.A. TILE *	4" RBR		TILE CONTINUOUS UNDER FOLDING STAGE
ENGLISH	B2	AC PANEL	9'-9"	A	HD. CT. PLAS.	MASONRY	HD. CT. PLAS.	VINYL TACK BD. 2/31	CARPET	4" RBR		
ENGLISH	B3	AC PANEL	9'-9"	A	MASONRY	VINYL TACK BD. 2/31	HD. CT. PLAS.	HD. CT. PLAS.	V.A. TILE	4" RBR		
BOOKS	B4	AC TILE	8'-0"	B	HD. CT. PLAS.	HD. CT. PLAS.	HD. CT. PLAS.	HD. CT. PLAS.	V.A. TILE	4" RBR		
OFFICE	B5	AC TILE	8'-0"	B	HD. CT. PLAS.	HD. CT. PLAS.	HD. CT. PLAS.	HD. CT. PLAS.	CARPET	4" RBR		
ENGLISH WORK CENTER	B6	AC PANEL AC TILE	9'-9" 8'-0"	A B	VINYL TACK BD. 2/31	HD. CT. PLAS	HD. CT. PLAS.	HD. CT. PLAS.	CARPET	4" RBR	2/33	
ENGLISH	B7	AC PANEL	9'-9"	A	MASONRY	HD. CT. PLAS.	VINYL TACK BOARD 2/31	HD. CT. PLAS.	V.A. TILE	4" RBR		
ENGLISH	B8	AC PANEL	9'-9"	A	VINYL TACK BD 2/31	HD. CT. PLAS.	HD. CT. PLAS.	HD. CT. PLAS.	V.A. TILE	4" RBR		
CONCESSION	B9	AC PANEL	9'-9"	A	HD. CT. PLAS.	HD. CT. PLAS.	HD. CT. PLAS.	PATCH PLAS @ NEW DR	V.A. TILE ⑤	4" RBR	12/36	
JOURNALISM	B10	AC PANEL	9'-9"	A	HD. CT. PLAS.	HD. CT. PLAS.	EXST'G	PATCH PLAS @ NEW DR	V.A. TILE ⑤	4" RBR	6/33	
OFFICE	B11	AC PANEL	9'-9"	A	HD. CT. PLAS.	HD. CT. PLAS.	HD. CT. PLAS.	HD. CT. PLAS.	V.A. TILE ⑤	4" RBR		
OFFICE	B12	AC PANEL	9'-9"	A	HD. CT. PLAS.	HD. CT. PLAS.	HD. CT. PLAS.	EXST'G	V.A. TILE ⑤	4" RBR		
SOCIAL STUDIES CTR	B13	AC PANEL	9'-9"	A	EXST'G	VINYL TACK BD. 2/31	EXST'G	EXST'G	CARPET ④	4" RBR		
GYM STORAGE	B14	EXST'G	—	—	EXST'G	HD. CT. PLAS.	EXST'G	PATCH PLAS @ NEW DR	EXST'G	EXST'G		
BOYS	B15	EXST'G	—	—	EXST'G	EXST'G	EXST'G	EXST'G	EXST'G	EXST'G		
GIRLS	B16	EXST'G	—	—	EXST'G	EXST'G	EXST'G	EXST'G	EXST'G	EXST'G		
PUMP	B17	EXST'G	—	—	EXST'G	EXST'G	EXST'G	EXST'G	EXST'G	EXST'G		
JANITOR	B18	EXST'G	—	—	EXST'G	EXST'G	EXST'G	EXST'G	EXST'G	EXST'G		
CORRIDOR	B19	AC TILE **	9'-10" 11'-9¼	C B	HD. CT. PLAS.	EXIST'G	EXIST'G.	EXIST'G ***	EXIST'G	EXIST'G *		*NEW 6" RBR BASE @ NORTH END, ***NEW WAINSCOT AT SOUTH END OF COR.- APPROX. 31'- SEE FL. PLAN A-14 **REMOVE EXIST'G CEIL'G TILE.
CORRIDOR	B20	AC TILE	9'-10"	C	HD. CT. PLAS.	DOOR	HD. CT. PLAS.	OPEN'G	V.A. TILE ⑤	4" RBR.		
CORRIDOR	B21	AC TILE	9'-6"	D	EXST'G/LAM PLAS WORK @ NEW DRS - SEE DR DTLS	EXST'G	EXST'G	LAM PLAS/GYP BRD	EXIST'G	EXIST'G		
ENGLISH	B22	EXST'G	—	—	EXST'G	EXST'G	EXST'G	EXST'G	EXST'G	EXST'G		
ENGLISH	B23	EXST'G	—	—	EXST'G	EXST'G	EXST'G	EXST'G	EXST'G	EXST'G		
BOYS	B24	EXST'G	—	—	EXST'G	EXST'G	HD. CT. PLAS. AT FILLED OPEN'G	EXST'G	EXST'G	EXST'G		
GIRLS	B25	EXST'G	—	—	EXST'G	EXST'G	HD. CT. PLAS. AT FILLED OPEN'G	EXST'G	EXST'G	EXST'G		
ENGLISH	B26	EXST'G	—	—	EXST'G	EXST'G	EXST'G	EXST'G	EXST'G	EXST'G		
ENGLISH	B27	EXST'G	—	—	EXST'G	EXST'G	EXST'G	EXST'G	EXST'G	EXST'G		
MECHANICAL ROOM	B28	NONE	—	—	EXST'G	WD. STUDS	WD. STUDS	EXST'G	CONC.	NONE		
STORAGE	B29	PLAS @ OPEN'G	—	—	GYP. BD.	EXST'G	GYP. BD.	EXST'G	V.A. TILE	NONE		
MECHANICAL ROOM	B30	GYP. BD.	VARIES	E	GYP. BD.	GYP. BD.	GYP. BD.	GYP. BD.	PLYWD.	NONE		

SECTOR C

ROOM NAME	NO.	CEILINGS MATERIAL, HEIGHT, & APPLICATION-SEE ①			WALLS NORTH	EAST	SOUTH	WEST	FLOOR	BASE	ELEV	REMARKS
MAIN OFFICE	C1	EXIST'G	—	—	EXST'G	EXST'G	EXST'G	EXST'G	EXST'G	EXST'G		
WORK ROOM	C2	EXIST'G	—	—	EXST'G	EXST'G	EXST'G	EXST'G	EXST'G	EXST'G		
VICE PRINCIPAL	C3	EXIST'G	—	—	EXST'G	EXST'G	EXST'G	EXST'G	EXST'G	EXST'G		
STORAGE	C4	EXIST'G	—	—	EXST'G	EXST'G	EXST'G	EXST'G	EXST'G	EXST'G		
WAITING	C5	EXIST'G	—	—	EXST'G	EXST'G	EXST'G	EXST'G	EXST'G	EXST'G		
DIRECTOR D.O.	C6	EXIST'G	—	—	EXST'G	EXST'G	EXST'G	EXST'G	EXST'G	EXST'G		
FILES	C7	EXIST'G	—	—	EXST'G	EXST'G	PLAS. @ FILLED DR. OPENING	EXST'G	EXST'G	6" RBR ⑥		
HALL	C8	EXIST'G	—	—	PATCH PLAS @ FILLED OPN'G	PLAS. AROUND NEW DOOR	EXST'G	HD. CT. PLAS	EXST'G	6" RBR ⑥		
SECRETARY	C9	EXIST'G	—	—	EXST'G	EXST'G	EXST'G	PATCH PLAS @ NEW DOOR	EXST'G	6" RBR ⑥		
WOMEN	C10	EXIST'G	—	—	EXST'G	EXST'G	EXST'G	EXST'G	EXST'G	EXST'G		
TOILET - WOMEN	C11	EXIST'G	—	—	EXST'G	EXST'G	EXST'G	EXST'G	EXST'G	EXST'G		
TOILET - MEN	C12	EXIST'G	—	—	EXST'G	EXST'G	EXST'G	EXST'G	EXST'G	EXST'G		
PRINCIPAL	C13	AC TILE	12'-0"	C	EXST'G	PATCH PLAS @ NEW DOOR	PLAS @ FILLED DR OPEN'G	EXST'G	CARPET * ④	4" RBR ⑥		* PATCH FLOORING @ REMOVED FIXTURES
MEN	C14	EXIST'G	—	—	EXST'G	EXST'G	EXST'G	EXST'G	EXST'G	EXST'G		
CONFERENCE	C15	EXIST'G - PATCH AS REQ'D			HD. CT. PLAS	HD. CT. PLAS	PLAS @ FILLED DR OPEN'G	PATCH PLAS @ N.W. CORNER	EXST'G	4" RBR		
COUNSELOR	C16	EXIST'G - PATCH AS REQ'D			EXST'G	EXST'G	HD. CT. PLAS	EXST'G	EXST'G	4" RBR ⑥		
COUNSELOR	C17	EXIST'G - PATCH AS REQ'D			PLAS. AT FILLED WNDW.	EXST'G	HD. CT. PLAS	HD CT PLAS	EXST'G	6" RBR ⑥		
COUNSELOR	C18	EXIST'G - PATCH AS REQ'D			PLAS. AT FILLED WNDW.	HD. CT. PLAS	HD. CT. PLAS	HD. CT. PLAS	EXST'G	6" RBR	10/35	
COUNSELLING CENTER	C19	EXIST'G - PATCH AS REQ'D			HD. CT. PLAS	REMOVE EXIST'G CHALKBRD. APPLY VINYL TACK BRD.	EXIST'G/VINYL TACK BRD @ ENTRY WAY	REMOVE EXIST'G CORK BRD APPLY VINYL TACK BRD	EXST'G *	4" RBR ⑥	4/33	*PATCH FLOOR @ NEW OPENING
COUNSELOR	C20	EXIST'G - PATCH AS REQ'D			EXST'G	HD. CT. PLAS	HD. CT. PLAS	REMOVE EXIST'G CORK BRD APPLY VINYL TACK BRD	EXST'G	6" RBR ⑥		
OFFICE	C21	EXIST'G - PATCH AS REQ'D			EXST'G	REMOVE EXIST'G CHALKBRD APPLY VINYL TACKBRD	HD. CT. PLAS	HD. CT. PLAS	EXST'G	6" RBR ⑥		
STUDENT STORE	C22	EXIST'G - PATCH AS REQ'D			HD. CT. PLAS	REMOVE EXIST'G CHALKBRD APPLY VINYL TACKBRD	EXST'G	HD. CT. PLAS	EXST'G	6" RBR ⑥	4/33	
OFFICE	C23	EXIST'G - PATCH AS REQ'D			EXST'G	HD. CT. PLAS	HD. CT. PLAS	PLAS @ FILLED WINDOW *	EXST'G	6" RBR ⑥		*FRAME IN EXST'G WINDOWS
STORAGE	C24	EXIST'G - PATCH AS REQ'D			HD. CT. PLAS	HD. CT. PLAS	HD. CT. PLAS	HD. CT. PLAS	EXST'G	6" RBR		
PHOTO	C25	EXIST'G - PATCH AS REQ'D			HD. CT. PLAS	HD. CT. PLAS	HD. CT. PLAS	PLAS @ FILLED OPENINGS *	EXST'G	6" RBR		*FRAME IN EXIST'G WINDOWS & DOOR
STUDENT COUNCIL	C26	EXIST'G - PATCH AS REQ'D			EXST'G	PLAS @ FILLED OPEN'G *	EXST'G	PLAS @ FILLED OPENINGS *	EXST'G	6" RBR ⑥		*FRAME IN EXST'G WINDOWS & DOOR
HEALTH	C27	EXIST'G - PATCH AS REQ'D			EXST'G	PLAS @ FILLED OPEN'G *	EXST'G	EXST'G	EXST'G	6" RBR		*FRAME IN EXST'G WINDOWS & DOOR
JANITOR	C28	EXIST'G	—	—	EXST'G	EXST'G	EXST'G	EXST'G	EXST'G	EXST'G		
BOY'S TOILET	C29	EXIST'G	—	—	EXST'G	EXST'G	EXST'G	EXST'G	EXST'G	EXST'G		
CORRIDOR	C30	AC TILE *	9'-10"	C	PLAS @ FILLED DOORS	OPEN	PLAS. @ FILLED DOORS	OPEN	EXIST'G	EXIST'G		*REMOVE EXIST'G CLG. TILE
GYMNASIUM	C31	AC TILE *	24'-0"	C	EXIST'G	EXIST'G	EXIST'G/HD. CT. PLAS @ BALCONY WALL	EXIST'G.	EXIST'G	EXIST'G	15/36	*REMOVE EXIST'G CLG TILE
GYM BALCONY	C32	EXIST'G	—	—	HD. CT. PLAS./HD. BD. OVER GYP. TO 8'-0"	EXIST'G	EXIST'G	EXIST'G	WOOD *	4" RBR		*RENAIL & REFINISH EXST'G FLOOR - SEE SPECS.
CORRIDOR	C33	AC TILE *	9'-6"	B	OPEN	EXST'G/PATCH PLAS @ FILLED OPEN'G.	OPEN	HD. CT. PLAS.	V.A. TILE ** EXST'G	6" RBR ⑥		*REMOVE EXST. CLG TILE **SAND EXST'G SEAMLESS FLR. @ OLD GIRLS LOCKER AREA TO ACHIEVE SUBSTANTIAL SUBSTRATE FOR NEW TILE.
WEIGHT ROOM	C34	EXIST'G - PATCH AS REQ'D			EXST'G	PATCH PLAS @ NEW DOOR & FILLED OPENING	EXST'G	HD. CT. PLAS	EXST'G	4" RBR ⑥		
STORAGE	C35	EXIST'G - PATCH AS REQ'D			PATCH PLAS @ FILLED OPN'G	HD. CT. PLAS	HD. CT. PLAS	EXST'G	EXST'G	4" RBR ⑥		
TEAM ROOM	C36	EXIST'G - PATCH AS REQ'D			HD. CT. PLAS	HD. CT. PLAS	PATCH PLAS @ NEW DOOR	EXST'G	EXST'G	4" RBR ⑥		REMOVE EXIST'G BASE @ NEW EPOXY FLR. & TURN EPOXY FLOOR UP WALL 4"
GIRLS LOCKERS	C37	AC PANEL * EXIST'G	9'-0"	A	PATCH PLAS @ NEW DOOR	HD. CT. PLAS	MASONRY @ DR 35C	EXST'G	EXST'G EPOXY FLR **	EXST'G.		*CEM. PLAS HEAD **GRIND EXIST'G FLR'G TO PROVIDE SUBSTANTIAL SUBSTRATE FOR EPOXY FLR SYSTEM
DRYING	C38	EXIST'G	—	—	EXST'G	EXST'G	EXST'G	EXST'G	EXST'G	EXST'G		
GIRLS SHOWER	C39	EXIST'G	—	—	EXST'G	EXST'G	EXST'G	EXST'G	EXST'G	EXST'G		
STORAGE	C40	EXIST'G - PATCH AS REQ'D			EXST'G	HD. CT. PLAS	EXST'G	EXST'G	EXST'G	4" RBR ⑥		
MECHANICAL ROOM	C41	EXIST'G	—	—	EXST'G	EXST'G	EXST'G	EXST'G	EXST'G	EXST'G		
TOWELS	C42	EXIST'G	—	—	CEM. PLAS.	EXST'G/PATCH PLAS @ NEW DOOR	EXST'G	HD. CT. PLAS.	V.A. TILE *	4" RBR ⑥		*FILL DEPRESSED FL. W/ CONC. TOPPING SLAB
HALL	C43	EXIST'G	—	—	EXST'G	EXST'G	EXST'G	EXST'G	EPOXY FL. *	EPOXY FL. ③		*GRIND EXIST'G FLR'G TO PROVIDE SUBSTANTIAL SUBSTRATE FOR EPOXY FLR. SYSTEM.
STORAGE	C44	EXIST'G	—	—	MASONRY @ DR 35C	EXST'G	EXST'G	EXST'G	EXST'G	EXST'G		
TOILET	C45	EXIST'G	—	—	EXST'G	PATCH PLAS @ NEW DOOR	EXST'G	EXST'G	EXST'G	EXST'G		
OFFICE	C46	EXIST'G - PATCH AS REQ'D			PATCH PLAS. @ NEW COL	PATCH PLAS @ FILLED OPN'G	PATCH PLAS @ NEW DR	EXST'G	EXST'G	EXST'G		
OFFICE	C47	AC TILE *	8'-0"	B	EXST'G	HD. CT. PLAS	EXST'G	PATCH PLAS @ FILLED OPN'G	V.A. TILE	4" RBR ⑥	9/35	*REMOVE EXIST'G CEILING TILE & GYP. BD.
TRAINING ROOM	C48	AC TILE *	8'-0"	B	PATCH PLAS @ NEW DR **	HD. CT. PLAS.	EXST'G **	PATCH PLAS. @ NEW DOOR	VA TILE ⑤	4" RBR ⑥		*REMOVE EXST'G CEILING TILE **PLAS. OVER EXIST'G GLAZED BLOCK TO FLUSH W/ ADJACENT SURFACE
STAIRS	C49	EXIST'G	—	—	OPEN	EXST'G	EXST'G	EXST'G	EXST'G	EXST'G		
STORAGE	C50	EXIST'G	—	—	EXST'G	EXST'G	EXST'G	EXST'G	EXST'G	EXST'G		
CORRIDOR	C51	AC TILE	9'-6"	B	EXST'G/PATCH PLAS @ NEW WALL	EXST'G/MASONRY	EXST'G/MASONRY	MASONRY	V.A. TILE	4" RBR		
HALL	C52	AC TILE	9'-6"	B	CEM. PLAS @ REMOVED PORTION	DOOR 38C	MASONRY	MASONRY	V.A. TILE *	4" RBR		*REMOVE EXIST'G TILE AT ENTRY TO DOOR 34C
TICKETS	C53	AC TILE	9'-7⅝"	D	EXST'G	MASONRY	MASONRY	EXIST'G	V.A. TILE	4" RBR		
OFFICE	C54	AC TILE	9'-7⅝"	D	MASONRY	MASONRY	MASONRY	EXIST'G	V.A. TILE	4" RBR		
ENTRY	C55	AC TILE	9'-6"	A	MASONRY	MASONRY	MASONRY	MASONRY	V.A. TILE	4" RBR		*CEM. PLAS. HEAD
BOY'S LOCKER ROOM	C56	WR AC PANEL *	9'-6"	A	EPOXY COATING	EPOXY COATING	EPOXY COATING	EPOXY COATING	EPOXY FLR	EPOXY FLR ③		*CEM. PLAS. HEAD
STORAGE	C57	AC TILE	9'-7⅝"	D	MASONRY	MASONRY	MASONRY	CEM. PLAS @ FILLED OPEN'G	V.A. TILE	4" RBR		
TOILET	C58	WR AC PANEL *	9'-7⅝"	D	EPOXY COATING	EPOXY COATING	EPOXY COATING	EPOXY COATING **	EPOXY FLR	EPOXY FLR ③	3/36	*REMOVE EXIST'G TILE, RE-USE EXIST'G GYP. BD. **PATCH PLAS. @ NEW DOOR OPENING
DRYING	C59	WR AC PANEL *	9'-6"	A	EPOXY COATING	OPEN	EPOXY COATING	EPOXY COATING	EPOXY FLR	EPOXY FLR ③		*CEM. PLAS. HEAD
SHOWER	C60	WR AC PANEL	9'-6"	A	EPOXY COATING	EPOXY COATING	EPOXY COATING	OPEN	EPOXY FLR	EPOXY FLR ③		
CORRIDOR	C61	AC TILE AC TILE	9'-6" 9'-7⅝"	B D	MASONRY	MASONRY	EXST'G/MASONRY COL.	EXST'G	V.A. TILE	4" RBR		
CORRIDOR	C62	AC PANEL *	9'-8½"	A	CEM PLAS @ NEW MASONRY	MASONRY	MASONRY	MASONRY	CONC ②	4" RBR		*CEM. PLAS. HEAD
EQUIPMENT ROOM	C63	AC PANEL	9'-8½"	A	MASONRY	MASONRY	WIRE PARTITION	MASONRY	CONC ②	4" RBR		
STORAGE	C64	AC PANEL	9'-8½"	A	WIRE PARTITION	MASONRY	MASONRY	MASONRY	CONC ②	4" RBR		
TEAM ROOM	C65	AC PANEL *	9'-8½"	A	MASONRY/EXIST'G	MASONRY	CEM. PLAS @ FILLED OPN'G	MASONRY	CONC ②	4" RBR		*CEM. PLAS HEAD
TOILET ROOM	C66	AC PANEL	9'-8½"	A	EPOXY COATING	EXST'G	OPEN	EPOXY COATING	CONC ②	4" RBR	4/36	
TRAINING ROOM	C67	AC PANEL	8'-11½"	A	MASONRY/PATCH PLAS @ DOOR 52C	EXST'G	MASONRY	MASONRY	CONC ②	4" RBR		
HALL	C68	WR AC PANEL	8'-11½"	A	EXST'G	EPOXY COATING	CEM PLAS - PATCH @ NEW OPENING	CEM PLAS @ NEW MASNRY AND DOOR 52C	CONC ②	4" RBR		
TEAM ROOM	C69	AC PANEL *	8'-11½"	A	EXST'G	MASONRY	MASONRY	MASONRY	CONC ②	4" RBR		*CEM. PLAS. HEAD
MECH ROOM	C70	GYP. BD. *	9'-2¼"	G	EXST'G	MASONRY	MASONRY	MASONRY	CONC	NONE		*1x4 WD. TRIM @ CEIL'G APPLIED TO WALL
OFFICE	C71	AC PANEL *	9'-8½"	A	CEM PLAS TO FLUSH W/ EXST'G	MASONRY	MASONRY	MASONRY	CONC ②	4" RBR	9/33	*CEM. PLAS. HEAD
COACHES	C72	AC PANEL	9'-8½"	A	MASONRY	MASONRY	MASONRY	MASONRY	CONC ②	4" RBR		
SHOWER	C73	WR AC PANEL	9'-8½"	A	EPOXY COATING	EPOXY COATING	EPOXY COATING/EXIST'G	EPOXY COATING	EPOXY FLR	EPOXY FLR ③	5/36	
TEAM ROOM	C74	AC PANEL *	9'-8½"	A	CEM PLAS @ NEW MASNRY	LOCKERS	EXIST'G	MASONRY	CONC ②	4" RBR		*CEM. PLAS. HEAD
BOYS LOCKER ROOM	C75	AC PANEL	9'-8½"	A	CEM PLAS - PATCH @ NEW OPENING	MASONRY	EXIST'G	LOCKERS	CONC ②	4" RBR		*CEM PLAS HEAD
TOILETS	C76	WR AC PANEL *	8'-11½"	A	EPOXY COATING	EPOXY COATING	OPEN	EPOXY COATING	EPOXY FLR	EPOXY FLR ③	6/36	*CEM. PLAS. HEAD
TEAM SHOWER	C77	WR AC PANEL *	8'-11½	A	EPOXY COATING	EPOXY COATING	OPEN	EPOXY COATING	EPOXY FLR	EPOXY FLR ③		*CEM. PLAS. HEAD
MECHANICAL ROOM	C78	GYP. BD. *	9'-2¼"	G	EXST'G	MASONRY	MASONRY	MASONRY	CONC	NONE		*1x4 WD. TRIM @ CEIL'G APPLIED TO WALL
TOWEL ROOM	C79	GYP. BD. *	9'-2¼"	G	MASONRY	MASONRY	MASONRY	MASONRY	CONC.	4" RBR		*1x4 WD. TRIM @ CEIL'G APPLIED TO WALL
BOYS SHOWER	C80	WR AC PANEL *	8'-11½"	A	EPOXY COATING	EPOXY COATING	OPEN	EPOXY COATING	EPOXY FLR	EPOXY FLR ③		*CEM. PLAS. HEAD
TOILETS	C81	WR AC PANEL *	8'-11½"	A	EPOXY COATING	EPOXY COATING	OPEN	EPOXY COATING	EPOXY FLR	EPOXY FLR ③	6/34	*CEM. PLAS. HEAD
OFFICE	C82	AC PANEL *	9'-8½"	A	PATCH PLAS @ DOOR	MASONRY	MASONRY	MASONRY	CONC ②	4" RBR	10/33	*CEM. PLAS. HEAD
STORAGE ROOM	C83	AC PANEL *	9'-8½"	A	MASONRY	MASONRY	EXST'G	MASONRY	CONC ②	4" RBR		*CEM. PLAS. HEAD
MECHANICAL ROOM	C84	GYP BD. *	9'-2¼"	G	EXST'G	MASONRY	MASONRY	MASONRY	CONC	NONE		*1x4 WD. TRIM @ CEIL'G APPLIED TO WALL
HALL	C85	WR AC PANEL	8'-11½"	A	EXST'G	EXST'G/CEM PLAS @ NEW MASONRY	CEM PLAS @ NEW MASONRY	EPOXY COATING	CONC ②	4" RBR ⑥		
STORAGE	C86	GYP. BD. *	9'-2¼"	G	EXST'G/MASONRY	EXST'G	EXST'G/MASONRY	MASONRY	CONC/EXIST.	4" RBR ⑥		*1x4 WD. TRIM @ CEIL'G APPLIED TO WALL
STAIRS	C87	EXIST'G	—	—	EXST'G	EXST'G	PATCH PLAS @ FILLED OPN'G	EXST'G	EXST'G	6" RBR		
JANITOR	C88	GYP. BD. **	9'-2¼"	G	MASONRY	EXST'G	EXST'G *	MASONRY *	CONC.	4" RBR		*CLEATS ABOVE MOP BASIN - SEE 16/35 **1x4 WD. TRIM @ CEIL'G APPLIED TO WALL
BOYS LOCKER ROOM	C89	AC PANEL *	9'-8½"	A	CEM PLAS @ NEW MASNRY	CEM PLAS @ NEW MASNRY	EXST'G	MASONRY	CONC	4" RBR		*CEM. PLAS. HEAD
PASSAGE	C90	WR AC PANEL	8'-11½"	A	EPOXY COATING	OPEN	CEM PLAS @ FILLED OPN'GS	OPEN	EPOXY FLR CONC ②	EPOXY FLR 4" RBR ③		
CORRIDOR	C91	AC TILE *	—	D	PATCH PLAS @ FILLED WINDOWS	EXST'G	EXST'G	EXST'G	EXST'G	EXST'G		*REMOVE EXIST'G CLG TILE
CLASSROOM	C92	EXIST'G	—	—	EXST'G	EXST'G	EXST'G	EXST'G	EXST'G	EXST'G		
CLASSROOM	C93	EXIST'G	—	—	EXST'G	EXST'G	EXST'G	EXST'G	EXST'G	EXST'G		
CLASSROOM	C94	EXIST'G	—	—	EXST'G	EXST'G	EXST'G	EXST'G	EXST'G	EXST'G		
CLASSROOM	C95	EXIST'G	—	—	EXST'G	EXST'G	EXST'G	EXST'G	EXST'G	EXST'G		
ATTIC ACCESS	C96	EXIST'G	—	—	EXST'G	EXST'G	EXST'G	EXST'G	EXST'G	EXST'G		
MECHANICAL ROOM	C97	GYP BD	6'-6"±	E	GYP BD	GYP BD	GYP BD	GYP BD	PLYWD	NONE		

ABBREVIATIONS:

AC TILE	12" x 12" ACOUSTICAL TILE
AC PANEL	24" x 48" ACOUSTICAL PANEL
WR AC PANEL	WATER-RESISTANT 24" x 48" ACOUSTICAL PANEL
HD. CT. PLAS.	HARD COAT PLASTER ON 1/2" PLASTER BASE
VINYL TACK BD.	1/2" VINYL-CLAD SOUND-DEADENING BOARD
V.A. TILE	VINYL ASBESTOS TILE

NOTES:

① CEILING SYSTEMS:
- A 24" x 48" LAY-IN ACOUSTICAL PANEL IN EXPOSED TEE SYSTEM
  - 1½" MAIN TEES TIED 48" O.C. W/ 8 GAGE WIRE
  - 1½" CROSS TEES 24" O.C.
- B 12" x 12" ACOUSTICAL TILE IN CONCEALED ZEE SYSTEM
  - 1½" C.R. CHANNELS 48" O.C. TIED W/ 8 GAGE WIRE
  - CONCEALED ZEE SPLINES 12" O.C.
  - FLAT SPLINES 12" O.C.
- C 12" x 12" ACOUSTIC TILE IN CONCEALED ZEE SYSTEM
  - CONCEALED ZEE SPLINES 12" O.C. SECURED TO JOIST OR STRIPPING W/ ZEE SPLINE CLIPS
  - FLAT SPLINES 12" O.C.
- D 12" x 12" ACOUSTIC TILE GLUED TO EXST'G OR NEW GYP. BD.
- E GYP. BD. ON JOIST OR STRIPPING
- F HD. CT. PLAS. ON 1/2" PLAS. BASE ON JOIST OR STRIPPING
- G GYP. BD. ON 2x4 STRIPPING @ 24" O.C. W/ 3/4" x 1½" WD. TRIM @ TOP OF ALL NEW MASONRY WALLS.

② CONCRETE TO RECEIVE INTEGRAL COLORING

③ EPOXY FLOOR SYSTEM TURNED UP WALL 4"

④ FILL EXIST'G TILE FLOOR AS REQ'D TO PROVIDE EVEN SUBSTRATE FOR NEW CARPET.

⑤ EXIST'G FLOOR TILE TO BE REMOVED, AND SUBSTRATE TO BE PREPARED FOR NEW FLOORING.

⑥ NEW BASE @ WALLS WHERE REQ'D BY NEW OR REMODELED WORK.

ROOM FINISH SCHEDULE - SECTORS A, B, & C

SWEET HOME HIGH SCHOOL
ADDITIONS AND ALTERATIONS 1974
DISTRICT 55 LINN COUNTY, OREGON

ARCHITECTS
HAMLIN, MARTIN, SCHULTZ & GEYER
AIA
159 W. 12TH EUGENE, OREGON 97401

A
30
JOB NO.

CLARE K. HAMLIN
Clare K Hamlin
EUGENE, OREGON

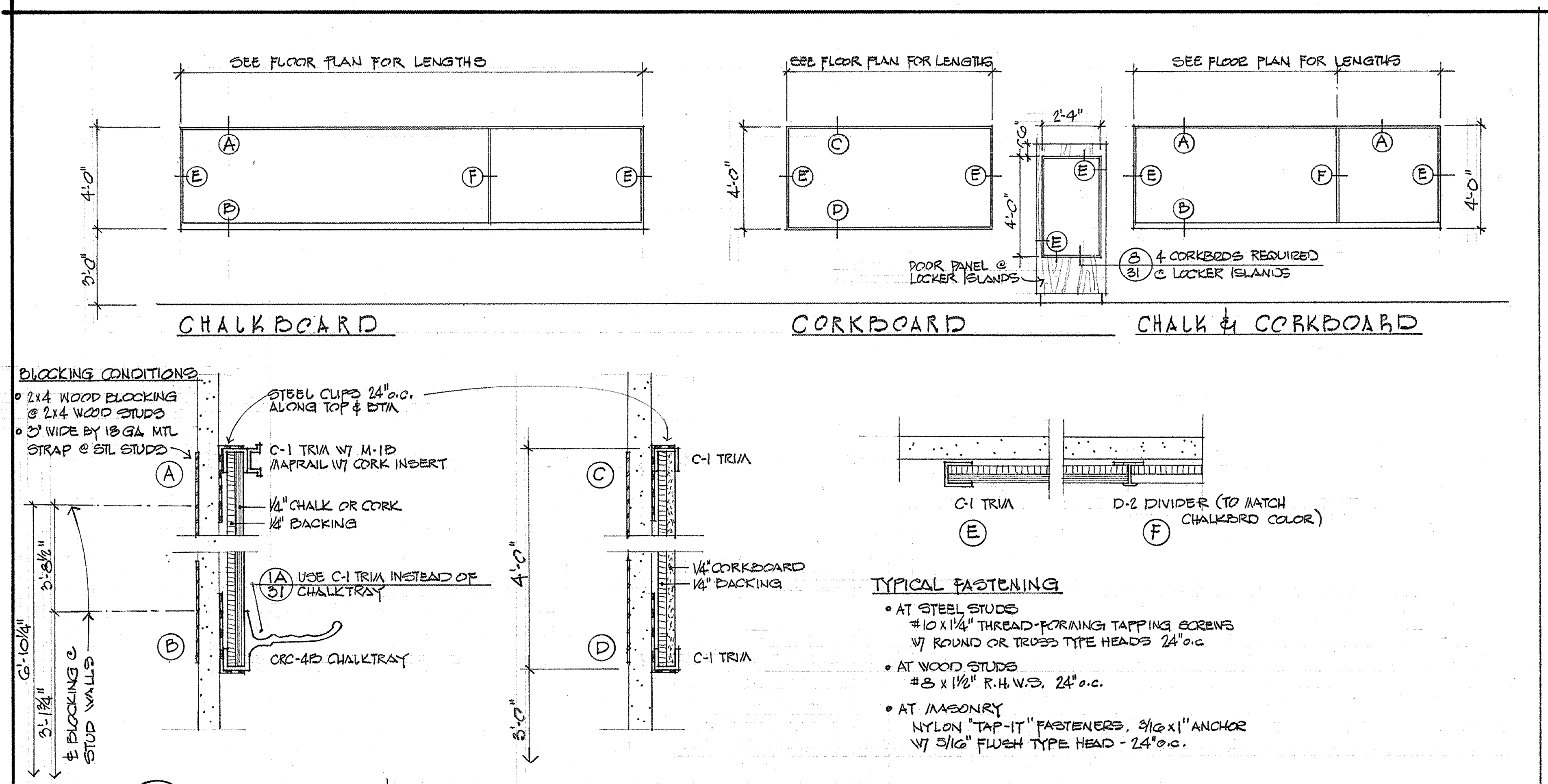
SEE FLOOR PLAN FOR LENGTHS
4'-0"
3'-0"
CHALKBOARD
SEE FLOOR PLAN FOR LENGTHS
2'-4"
9"
4'-0"
DOOR PANEL @ LOCKER ISLANDS
CORKBOARD
SEE FLOOR PLAN FOR LENGTHS
8/31 4 CORKBRDS REQUIRED @ LOCKER ISLANDS
CHALK & CORKBOARD
BLOCKING CONDITIONS
• 2x4 WOOD BLOCKING @ 2x4 WOOD STUDS
• 3" WIDE BY 18 GA. MTL STRAP @ STL STUDS
STEEL CLIPS 24" o.c. ALONG TOP & BTM
C-1 TRIM W/ M-1B MAPRAIL W/ CORK INSERT
1/4" CHALK OR CORK
1/4" BACKING
1A/31 USE C-1 TRIM INSTEAD OF CHALKTRAY
CRC-4B CHALKTRAY
6'-10¼"
3'-8½"
3'-1¾"
℄ BLOCKING @ STUD WALLS
4'-0"
3'-0"
C-1 TRIM
1/4" CORKBOARD
1/4" BACKING
C-1 TRIM
C-1 TRIM
D-2 DIVIDER (TO MATCH CHALKBRD COLOR)
TYPICAL FASTENING
• AT STEEL STUDS #10 x 1¼" THREAD-FORMING TAPPING SCREWS W/ ROUND OR TRUSS TYPE HEADS 24" o.c.
• AT WOOD STUDS #8 x 1½" R.H.W.S. 24" o.c.
• AT MASONRY NYLON "TAP-IT" FASTENERS, 3/16 x 1" ANCHOR W/ 5/16" FLUSH TYPE HEAD - 24" o.c.
A
B
C
D
E
F

1/31 CHALK & CORKBOARD DETAILS

NOTE:
DETAILS BASED ON NELSON
ADAMS SERIES 150 COMPONENTS

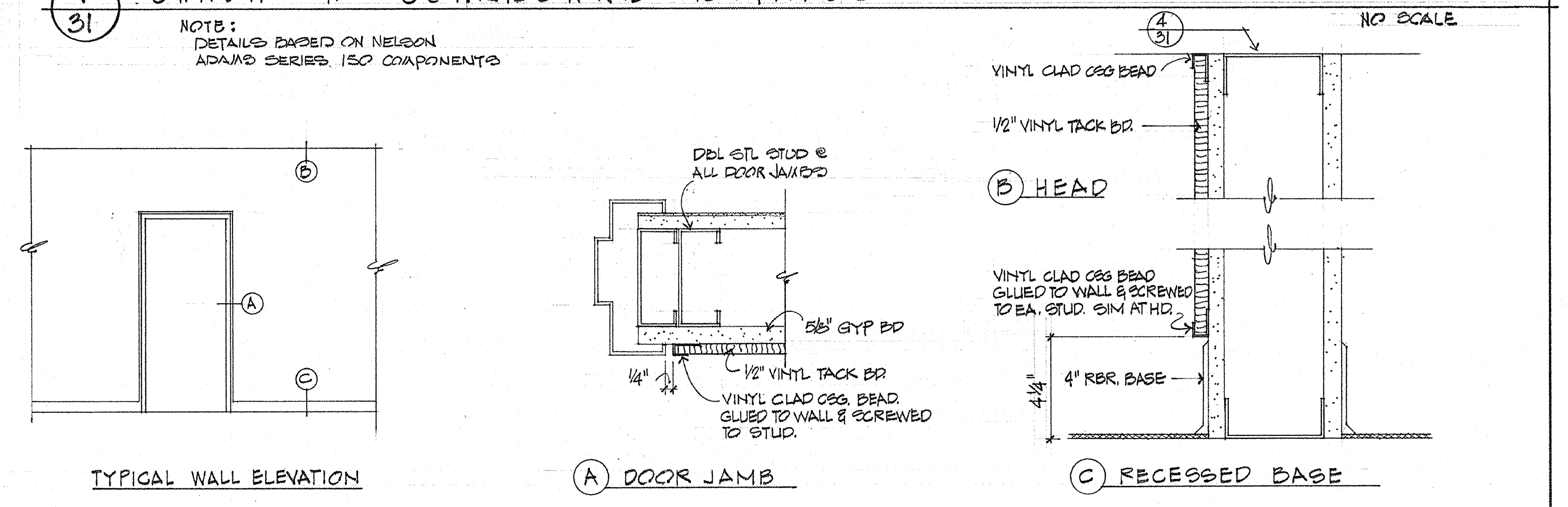
NO SCALE
4/31
VINYL CLAD CSG BEAD
1/2" VINYL TACK BD.
B HEAD
VINYL CLAD CSG BEAD GLUED TO WALL & SCREWED TO EA. STUD. SIM AT HD.
4" RBR. BASE
4¼"
DBL STL STUD @ ALL DOOR JAMBS
5/8" GYP BD
1/2" VINYL TACK BD
1/4"
VINYL CLAD CSG. BEAD. GLUED TO WALL & SCREWED TO STUD.
TYPICAL WALL ELEVATION
A DOOR JAMB
C RECESSED BASE

2/31 TRIM DETAILS @ VINYL TACK BOARD SURFACES

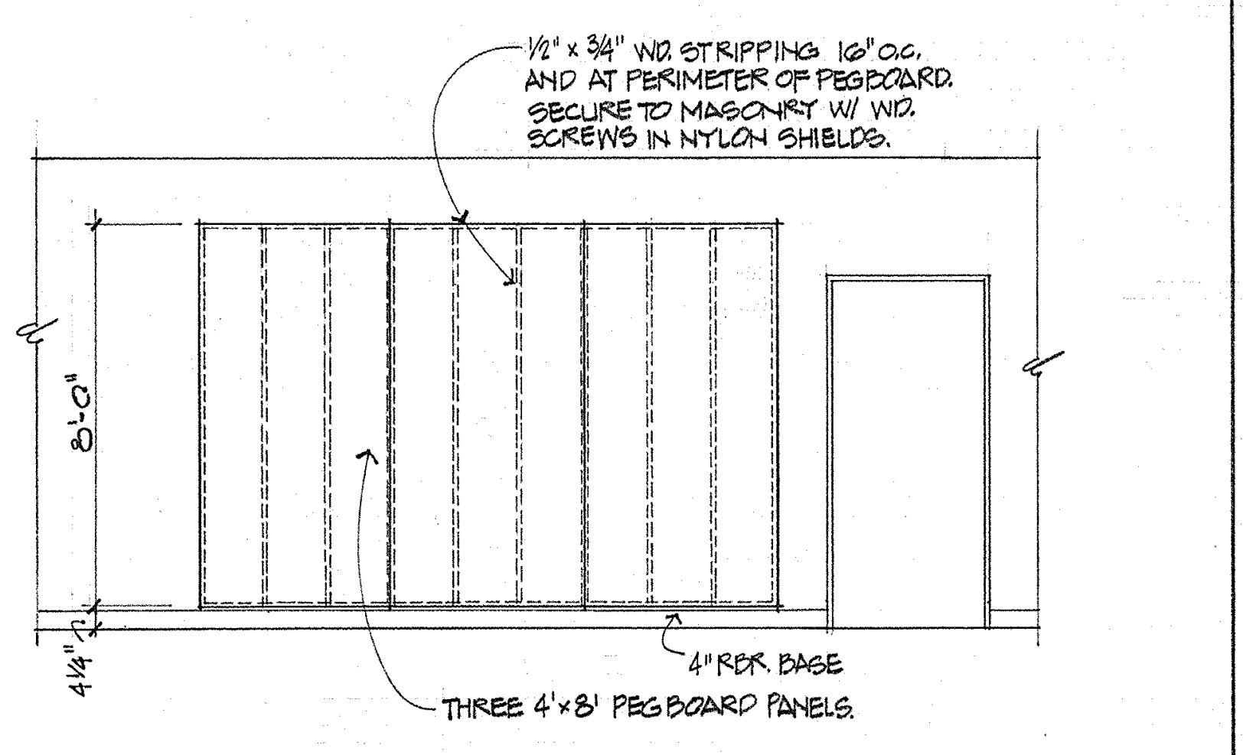
1/2" x 3/4" WD. STRIPPING 16" O.C. AND AT PERIMETER OF PEGBOARD. SECURE TO MASONRY W/ WD. SCREWS IN NYLON SHIELDS.
8'-0"
4¼"
4" RBR. BASE
THREE 4'x8' PEGBOARD PANELS.

3/31 PEGBOARD WALL SURFACE
1/4"=1'-0"

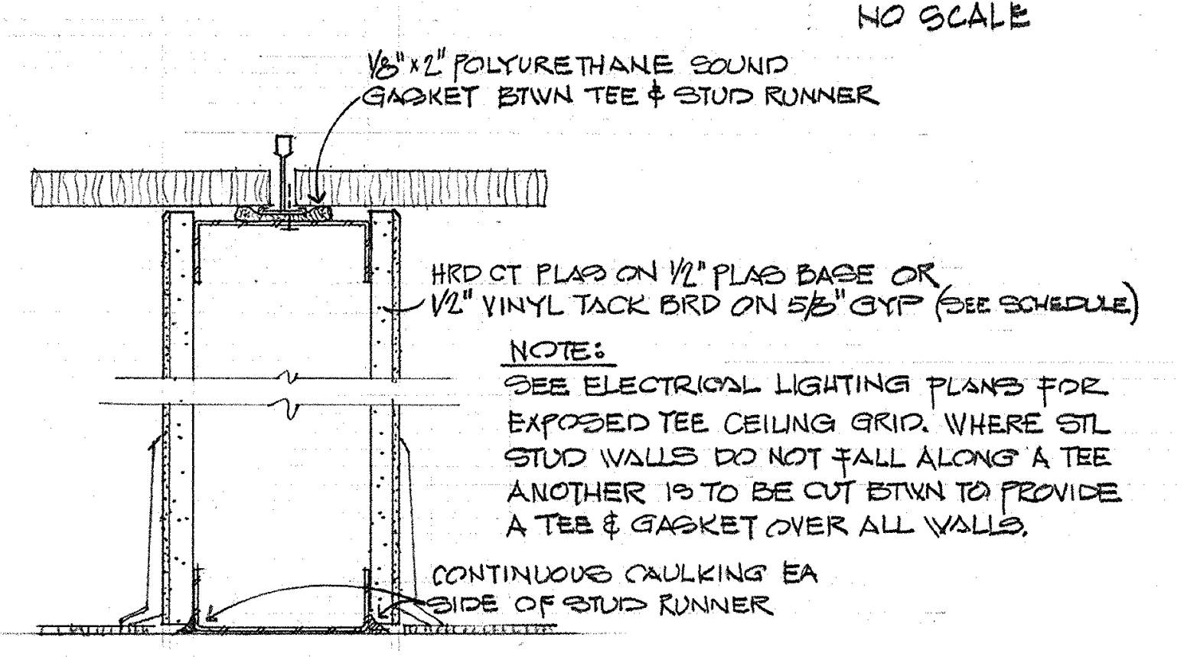
NO SCALE
1/8" x 2" POLYURETHANE SOUND GASKET BTWN TEE & STUD RUNNER
HRD CT PLAS ON 1/2" PLAS BASE OR 1/2" VINYL TACK BRD ON 5/8" GYP (SEE SCHEDULE)
NOTE: SEE ELECTRICAL LIGHTING PLANS FOR EXPOSED TEE CEILING GRID. WHERE STL STUD WALLS DO NOT FALL ALONG A TEE ANOTHER IS TO BE CUT BTWN TO PROVIDE A TEE & GASKET OVER ALL WALLS.
CONTINUOUS CAULKING EA SIDE OF STUD RUNNER

4/31 STEEL STUD PARTITION DTLS
3"=1'-0"

ROOM FINISH SCHEDULE

ROOM		CEILINGS			WALLS				FLOOR	BASE	ELEV.	REMARKS
NAME	NO.	MATERIAL, HEIGHT, & APPLICATION—SEE ①			NORTH	EAST	SOUTH	WEST				
SECTOR D												
CAFETERIA	D1	EXST'G	—	—	EXST'G	EXST'G	EXST'G	PATCH PLAS AROUND OPEN'G AND AROUND AIR GRILLES (8/18)	EXST'G *	EXST'G		*PATCH EXST'G TILE @ REMOVED WALLS AS REQ'D
CORRIDOR	D2	AC TILE *	9'-10"	C	EXST'G DOOR	EXST'G	OPEN	EXST'G	EXST'G	EXST'G		*REMOVE EXIST'G CLG. TILE
JANITOR	D3	EXST'G	—	—	EXST'G	EXST'G	EXST'G	EXST'G	EXST'G	EXST'G		
GIRLS	D4	EXST'G	—	—	EXST'G	EXST'G	EXST'G	EXST'G	EXST'G	EXST'G		
FACULTY DINING	D5	EXST'G	—	—	EXST'G	EXST'G	EXST'G	EXST'G	EXST'G	EXST'G		
UNASSIGNED	D6	—	—	—	—	—	—	—	—	—		
KITCHEN	D7	EXIST'G	—	—	PATCH PLAS @ FILLED OPN'G	PATCH PLAS AT AIR GRILLES (8/18)	EXST'G	EXST'G	EXST'G	EXST'G		
PREPARATION	D8	EXST'G	—	—	EXST'G	EXST'G	EXST'G	PATCH PLAS. AT ENLARGED OPENING	EXST'G *	4" RBR. ⑥		*PATCH TILE AT ENLARGED OPEN'G
LAVATORY	D9	EXST'G	—	—	EXST'G	EXST'G	EXST'G	EXST'G	EXST'G	EXST'G		
TOILET	D10	EXST'G	—	—	EXST'G	EXST'G	EXST'G	EXST'G	EXST'G	EXST'G		
COOLER	D11	EXST'G	—	—	EXST'G	EXST'G	EXST'G	EXST'G	EXST'G	EXST'G		
FREEZER	D12	EXST'G	—	—	EXST'G	EXST'G	EXST'G	EXST'G	EXST'G	EXST'G		
STORAGE	D13	EXST'G	—	—	EXST'G	EXST'G	EXST'G	EXST'G	EXST'G	EXST'G		
DRY STORAGE	D14	EXST'G	—	—	EXST'G	EXST'G	EXST'G	EXST'G	EXST'G	EXST'G		
HALL	D15	EXST'G	8'-6"	—	EXST'G/ PATCH PLAS. AT NEW OPENING	OPEN	EXST'G	PATCH PLAS AT FILLED OPEN'G	EXST'G	4" RBR ⑥		
OFFICE	D16	AC TILE	8'-0"	B	EXST'G	PATCH PLAS @ FILLED OPG	HD CT PLAS	HD CT PLAS	EXST'G	4" RBR ⑥		
CORRIDOR	D17	AC TILE	9'-6"	B	HD CT PLAS	OPEN / PATCH PLAS AT NEW OPENING	EXST'G	PLAS @ NEW MASONRY	EXST'G	4" RBR ⑥		
FOOD TRANSPORT	D18	AC TILE	10'-6"	D	EXST'G/ PATCH PLAS AT REMOVED WALL	HD CT PLAS	HD CT PLAS	PLAS @ NEW MASONRY	EXIST'G *	4" RBR ⑥	8/33	*PATCH TILE AT REMOVED WALL
DRY STORAGE	D19	EXST'G	10'-6"	—	EXST'G	EXIST'G	GYP. BD. AROUND NEW OPEN'G	PLAS @ NEW MASONRY	EXST'G	EXST'G		
GARBAGE	D20	EXST'G	—	—	EXST'G	MATCH EXIST'G FIN. @ FILLED OPEN'G.	EXST'G	EXST'G	EXST'G	EXST'G		
SWIMMING POOL	D21	EXST'G	—	—	EXST'G	PATCH PLAS @ NEW OPNGS	EXST'G	EXST'G	EXST'G *	EXST'G	8/35	*PATCH CONC. - SEE FLR. PLAN SHT. A-14
POOL MECHANICAL RM	D22	EXST'G	—	—	EXST'G	EXST'G	EXST'G	EXST'G	EXST'G	EXST'G		
CHLORINATOR ROOM	D23	GYP BRD	11'-6¼"	E	EXIST'G STUCCO	EXIST'G CONC.	MASONRY/CONC.	MASONRY	CONC	4" RBR		
POOL STORAGE	D24	OPEN			EXST'G	EXIST'G	EXIST'G	EXST'G	EXST'G	EXST'G		
ENTRY	D25	AC PANEL	9'-6"	A	MASONRY	DOORS/WINDOWS	OPEN TO GYM	MASONRY	V.A. TILE	4" RBR		
STORAGE ROOM	D26	HD. CT. PLAS	10'-0"	F	MASONRY	MASONRY	MASONRY *	MASONRY *	CONC	4" RBR		* HD. CT. PLAS. @ MECH CHASE
JANITOR	D27	HD. CT. PLAS	10'-0"	F	MASONRY	MASONRY	MASONRY	MASONRY	CONC	4" RBR		CLEATS ABOVE MOP BASIN - SEE (16/35)
BOYS	D28	AC PANEL	9'-6"	A	EPOXY CTG	EPOXY CTG	EPOXY CTG	EPOXY CTG	EPOXY FLR	EPOXY FLR	7/36	
GIRLS	D29	AC PANEL	9'-6"	A	EPOXY CTG	EPOXY CTG	EPOXY CTG	EPOXY CTG	EPOXY FLR	EPOXY FLR	8/36	
FOYER	D30	AC PANEL	9'-6"	A	MASONRY	MASONRY	MASONRY	DOORS / WINDOWS	V.A. TILE	4" RBR		
P.E. GYMNASIUM	D31	3" CEMENT FIBER PLANK	—	—	1" CEMENT FIBER PLANK/ MASONRY	1" CEMENT FIBER PLANK/ MASONRY	1" CEMENT FIBER PLANK/ MASONRY	1" CEMENT FIBER PLANK/ MASONRY	VINYL GYM FLR	WOOD (7/18)	16/36	
SECTOR E												
ENGLISH	E1	AC PANEL	9'-9"	A	MASONRY	MASONRY	HD CT PLAS	VINYL TACK BD. (2/31)	V.A. TILE	4" RBR		
FOODS	E2	AC PANEL	9'-9"	A	HD. CT. PLAS.	MASONRY	HD CT PLAS.	HD. CT. PLAS.	V.A. TILE	4" RBR		
CLOTHING	E3	AC PANEL	9'-9"	A	HD. CT. PLAS.	MASONRY	MASONRY	HD. CT. PLAS.	V.A. TILE	4" RBR		
CHILD CARE	E4	AC PANEL	9'-9"	A	HD. CT. PLAS	VINYL TACK BD. (2/31)	MASONRY	MASONRY	V.A. TILE	4" RBR		
TOILET	E5	AC PANEL	9'-9"	A	HD. CT. PLAS	HD. CT. PLAS	HD. CT. PLAS	HD CT PLAS	SHT VINYL	SHT VINYL		
STO	E6	AC PANEL	9'-9"	A	HD. CT. PLAS	HD. CT. PLAS	HD. CT. PLAS	MASONRY	V.A. TILE	4" RBR		
HOMEMAKING	E7	AC PANEL	9'-9"	A	HD. CT. PLAS	HD CT. PLAS	HD. CT. PLAS	MASONRY	V.A. TILE	4" RBR	7/33	
LAUNDRY	E8	AC PANEL	9'-9"	A	HD. CT. PLAS	HD. CT. PLAS	OPEN	HD. CT. PLAS	V.A. TILE	4" RBR		
STORAGE	E9	AC PANEL	9'-9"	A	HD. CT. PLAS	HD. CT. PLAS	HD. CT. PLAS	MASONRY	V.A. TILE	4" RBR		
OFFICE	E10	AC PANEL	9'-9"	A	HD. CT. PLAS	HD. CT. PLAS	HD. CT. PLAS	HD. CT. PLAS	V.A. TILE	4" RBR		
SPECIAL EDUC	E11	AC PANEL	9'-9"	A	MASONRY	VINYL TACK BD (2/31)	HD. CT. PLAS	MASONRY	V.A. TILE	4" RBR		
GIRLS	E12	CEM PLAS	—	—	EPOXY CTG	EPOXY CTG	EPOXY CTG	EPOXY CTG	EPOXY FLR	EPOXY FLR	10/36	
JANITOR	E13	CONC	—	—	MASONRY	MASONRY	MASONRY	MASONRY	CONC	NONE		CLEATS ABOVE MOP BASIN - SEE (16/35)
MECH ROOM	E14	2 LAYERS GYP BD	—	E	MASONRY - GYP BRD	MASONRY - GYP BRD	MASONRY - GYP BRD	MASONRY - GYP BRD	CONC	NONE		
BOYS	E15	CEM PLAS	—	—	EPOXY CTG.	EPOXY CTG	EPOXY CTG	EPOXY CTG	EPOXY FLR	EPOXY FLR	9/36	
CONF	E16	AC PANEL	9'-9"	A	MASONRY	MASONRY	HD CT PLAS	VINYL TACK BD. (2/31)	CARPET	4" RBR	1/33	
LIBRARY	E17	AC PANEL	9'-9"	A	MASONRY	MASONRY	HD. CT. PLAS	MASONRY	CARPET	4" RBR		
MATH	E18	AC PANEL	9'-9"	A	HD CT PLAS	MASONRY	MASONRY	HD CT PLAS	V.A. TILE	4" RBR		
UNASSIGNED	E19	—	—	—	—	—	—	—	—	—		
OFFICE	E20	AC PANEL	9'-9"	A	HD. CT. PLAS	HD. CT. PLAS	HD. CT. PLAS	HD. CT. PLAS	CARPET	4" RBR	5/33	
WORK ROOM	E21	AC PANEL	9'-9"	A	HD. CT. PLAS	HD. CT. PLAS	MASONRY	HD. CT. PLAS.	V.A. TILE	4" RBR		
AUDIO VISUAL	E22	AC PANEL	9'-9"	A	HD CT PLAS	HD CT PLAS	CEM. PLAS ON MASONRY	MASONRY	V.A. TILE	4" RBR		
UNASSIGNED	E23	—	—	—	—	—	—	—	—	—		
GENERAL BUSINESS	E24	AC PANEL	9'-9"	A	MASONRY	MASONRY	VINYL TACK BD (2/31)	HD CT PLAS	V.A. TILE	4" RBR		
BOOKKEEPING	E25	AC PANEL	9'-9"	A	VINYL TACK BD (2/31)	MASONRY	VINYL TACK BD (2/31)	HD CT PLAS	V.A. TILE	4" RBR		
MODEL OFFICE	E26	AC PANEL	9'-9"	A	VINYL TACK BD (2/31)	MASONRY	VINYL TACK BD (2/31)	HD. CT. PLAS	CARPET	4" RBR		
TYPING ROOM	E27	AC PANEL	9'-9"	A	HD CT PLAS	MASONRY	MASONRY	VINYL TACK BD (2/31)	V.A. TILE	4" RBR		
BUSINESS MACHINES	E28	AC PANEL	9'-9"	A	VINYL TACK BD (2/31)	HD. CT. PLAS.	VINYL TACK BD (2/31)	HD CT PLAS.	CARPET	4" RBR		
MATH	E29	AC PANEL	9'-9"	A	MASONRY - HD. CT. PLAS	HD. CT. PLAS	MASONRY	MASONRY	V.A. TILE	4" RBR		
BOYS	E30	CEM PLAS	—	—	EPOXY CTG.	EPOXY CTG.	EPOXY CTG.	EPOXY CTG	EPOXY FLR	EPOXY FLR	9/36	
JANITOR	E31	CONC	—	—	MASONRY	MASONRY	MASONRY	MASONRY	CONC	NONE		CLEATS ABOVE MOP BASIN - SEE (16/35)
GIRLS	E32	CEM PLAS	—	—	EPOXY CTG.	EPOXY CTG.	EPOXY CTG	EPOXY CTG	EPOXY FLR	EPOXY FLR	10/36	
MECH ROOM	E33	2 LAYERS GYP BD	—	E	MASONRY - GYP BRD	MASONRY - GYP BRD	MASONRY - GYP BRD	MASONRY - GYP BRD	CONC	NONE		
MATH WORK CENTER	E34	AC PANEL	8'-6"	A	VINYL TACK BD (2/31)	HD. CT. PLAS	HD. CT. PLAS	MASONRY	CARPET	4" RBR		
MATH ROOM	E35	AC PANEL	9'-9"	A	MASONRY	VINYL TACK BD. (2/31)	HD. CT. PLAS	MASONRY	V.A. TILE	4" RBR		
CORRIDOR	E36	AC PANEL	9'-9"	A	MASONRY	MASONRY	MASONRY	MASONRY	V.A. TILE	4" RBR		
GENERAL SCIENCE	E37	AC PANEL	9'-9"	A	VINYL TACK BD. (2/31)	MASONRY	MASONRY	HD. CT. PLAS	V.A. TILE	4" RBR		
CHEMICAL STO	E38	AC PANEL	8'-6"	A	HD. CT. PLAS	MASONRY	HD. CT. PLAS	HD CT. PLAS	V.A. TILE	4" RBR		
STORAGE	E39	AC PANEL	8'-6"	A	HD. CT. PLAS	HD. CT. PLAS	HD. CT. PLAS	HD CT. PLAS	V.A. TILE	4" RBR		
STUDENT LAB & RESOURCE	E40	AC PANEL	8'-6"	A	HD. CT. PLAS.	HD. CT. PLAS	HD. CT. PLAS	HD. CT. PLAS	V.A. TILE	4" RBR		
WORK ROOM	E41	AC PANEL	8'-6"	A	HD. CT. PLAS	HD. CT. PLAS	HD. CT. PLAS	HD. CT. PLAS	V.A. TILE	4" RBR		
ENLARGING	E42	AC PANEL	8'-6"	A	HD. CT. PLAS	MASONRY	HD CT PLAS	HD CT PLAS	V.A. TILE	4" RBR		
FILM	E43	AC PANEL	8'-6"	A	HD. CT. PLAS	MASONRY	HD. CT. PLAS	HD. CT. PLAS	V.A. TILE	4" RBR		
DRY	E44	AC PANEL	8'-6"	A	HD. CT. PLAS	HD. CT. PLAS	HD. CT. PLAS	HD. CT. PLAS	V.A. TILE	4" RBR		
HALL	E45	AC PANEL	8'-6"	A	HD. CT. PLAS	MASONRY	HD. CT. PLAS	OPEN	V.A. TILE	4" RBR		
MATH ROOM	E46	AC PANEL	9'-9"	A	MASONRY	MASONRY	HD. CT. PLAS	VINYL TACK BD. (2/31)	V.A. TILE	4" RBR		
PHYSICS & CHEMISTRY	E47	AC PANEL	9'-9"	A	MASONRY	VINYL TACK BD (2/31)	HD. CT. PLAS	MASONRY	V.A. TILE	4" RBR		
GENERAL SCIENCE	E48	AC PANEL	9'-9"	A	VINYL TACK BD. (2/31)	HD. CT. PLAS.	VINYL TACK BD. (2/31)	MASONRY	V.A. TILE	4" RBR		
BIOLOGY	E49	AC PANEL	9'-9"	A	VINYL TACK BD (2/31)	HD. CT. PLAS.	MASONRY	MASONRY	V.A. TILE	4" RBR		
ANIMALS	E50	CEM PLAS	9'-9⅝"	—*	MASONRY	CEM PLAS**	CEM PLAS**	CEM PLAS**	CONC	4" RBR		*CEM PLAS ON JOISTS **SMOOTH TROWELED FINISH
PLANTS	E51	CEM PLAS	9'-9⅝"	—*	MASONRY	CEM PLAS**	CEM PLAS**	CEM PLAS**	CONC	4" RBR		*CEM PLAS ON JOISTS **SMOOTH TROWELED FINISH

NOTES:

① CEILING SYSTEMS:
- A 24" x 48" LAY-IN ACOUSTICAL PANEL IN EXPOSED TEE SYSTEM
  - 1½" MAIN TEES TIED 48" O.C. W/ 8 GAGE WIRE
  - 1½" CROSS TEES 24" O.C.
- B 12" x 12" ACOUSTICAL TILE IN CONCEALED ZEE SYSTEM
  - 1½" C.R. CHANNELS 48" O.C. TIED W/ 8 GAGE WIRE
  - CONCEALED ZEE SPLINES 12" O.C.
  - FLAT SPLINES 12" O.C.
- C 12" x 12" ACOUSTIC TILE IN CONCEALED ZEE SYSTEM
  - CONCEALED ZEE SPLINES 12" O.C. SECURED TO JOIST OR STRIPPING W/ ZEE SPLINE CLIPS
  - FLAT SPLINES 12" O.C.
- D 12" x 12" ACOUSTIC TILE GLUED TO EXST'G OR NEW GYP. BD.
- E GYP. BD. ON JOIST OR STRIPPING
- F HD. CT. PLAS. ON 1/2" PLAS. BASE ON JOIST OR STRIPPING

② CONCRETE TO RECEIVE INTEGRAL COLORING

③ EPOXY FLOOR SYSTEM TURNED UP WALL 4"

④ FILL EXIST'G TILE FLOOR AS REQ'D TO PROVIDE EVEN SUBSTRATE FOR NEW CARPET.

⑤ EXIST'G FLOOR TILE TO BE REMOVED, AND SUBSTRATE PREPARED FOR NEW FLOORING.

⑥ NEW BASE @ WALLS WHERE REQ'D BY NEW OR REMODELED WORK.

ABBREVIATIONS:

• AC TILE	12" x 12" ACOUSTICAL TILE
• AC PANEL	24" x 48" ACOUSTICAL PANEL
• WR AC PANEL	WATER-RESISTANT 24" x 48" ACOUSTICAL PANEL
• HD. CT. PLAS	HARD COAT PLASTER ON 1/2" PLASTER BASE
• VINYL TACK BD	1/2" VINYL-CLAD SOUND-DEADENING BOARD
• V.A. TILE	VINYL ASBESTOS TILE

ROOM FINISH SCHEDULE - SECTORS D & E
SWEET HOME HIGH SCHOOL
ADDITIONS AND ALTERATIONS 1974
DISTRICT 55 LINN COUNTY, OREGON

ARCHITECTS
HAMLIN, MARTIN, SCHULTZ & GEYER
AIA
159 W. 12TH EUGENE, OREGON 97401

A
31
JOB NO.

REGISTERED ARCHITECT
CLARE K. HAMLIN
Clare K Hamlin
EUGENE, OREGON
STATE OF OREGON

MARK	LEAVES	SIZE	TYPE	DOOR MAT	FRAME MAT	ROOM	DETAIL	REMARKS	HDWRE GROUP
		SECTOR A							
1A	2	3'-0" x 1¾" x 7'-0"	E	H.M.	STL	A3	6/34		1
2A		UNASSIGNED							–
3A	1	3'-0" x 1¾" x 7'-0"	C	SCW	WOOD	A1	7/33 4/38 Ⓐ		2
4A	1	3'-0" x 1¾" x 7'-0"	A	SCW	WOOD	A26	7/33		3
5A	1	3'-0" x 1¾" x 7'-0"	A	SCW	WOOD	A4	7/33		4
6A	1	3'-0" x 1¾" x 7'-0"	A	SCW	WOOD	A6	7/33		4
7A	1	3'-0" x 1¾" x 7'-0"	A	SCW	WOOD	A5	6/33		3
8A	1	3'-0" x 1¾" x 7'-0"	B	SCW	WOOD	A13	6/33		5
9A	1	3'-0" x 1¾" x 7'-0"	B	SCW	WOOD	A7	1/33	SEE ELEV 3/33	6
10A	1	3'-0" x 1¾" x 7'-0"	B	SCW	WOOD	A8	1/33	SEE ELEV 3/33	6
11A	1	3'-0" x 1¾" x 7'-0"	A	SCW	WOOD	A9	1/33	SEE ELEV 3/33	6
12A	1	3'-0" x 1¾" x 7'-0"	B	SCW	WOOD	A10	1/33	SEE ELEV 3/33	6
13A	1	3'-0" x 1¾" x 7'-0"	B	SCW	WOOD	A11	1/33	SEE ELEV 3/33	6
14A	1	3'-0" x 1¾" x 7'-0"	B	SCW	WOOD	A12	1/33	SEE ELEV 3/33	6
15A	1	3'-0" x 1¾" x 7'-0"	A	H.M.	STL	A13	13/34		7
16A	1	15'-0" WIDE x 8'-0" HIGH	F	FABRIC	WOOD	A14	11/33	FOLDING DOOR - SCHEDULED HGHT TO BTM OF TRACK - PREPARE FOR CYLINDER BY HARDWARE	17
17A	1	15'-0" WIDE x 8'-0" HIGH	F	FABRIC	WOOD	A14	11/33	FOLDING DOOR - SCHEDULED HGHT TO BTM OF TRACK - PREPARE FOR CYLINDER BY HARDWARE	17
18A	1	3'-0" x 1¾" x 7'-0"	B	SCW	WOOD	A13	6/33		5
19A		UNASSIGNED							–
20A	1	3'-0" x 1¾" x 7'-0"	A	SCW	WOOD	A29	19/33		3
21A	2	2'-10" x 1¾ x 7'-0"	A	SCW	STL	A20	12/34	ASTRAGAL ON NORTH LEAF	8
22A	1	3'-0" x 1¾" x 7'-0"	A	SCW	EX. WD	A17	①		3
23A	2	3'-0" x 1¾" x 7'-0"	E	H.M.	STL	A16	7/34		1
24A	1	3'-0" x 1¾" x 7'-6"	A	H.M.	STL	A19	5/35	1 HR. RATED DOOR & FRAME	9
25A	2	3'-0" x 1¾" x 7'-0"	B	SCW	EX WD	A22	①		10
26A		UNASSIGNED							7
27A	1	3'-0" x 1¾" x 7'-0"	A	SCW	WOOD	A27	7/33		3
28A	1	3'-0" x 1¾" x 5'-4"	A	SCW	STL	A28	2A/35	1 HR RATED DR & FRAME, VERIFY DOOR HT. ?	37
29A	1	3'-0" x 1¾" x 5'-4"	A	SCW	STL	A28	2A/35	1 HR RATED DR & FRAME, VERIFY DOOR HT. ?	37
30A		UNASSIGNED							–
31A		UNASSIGNED							–

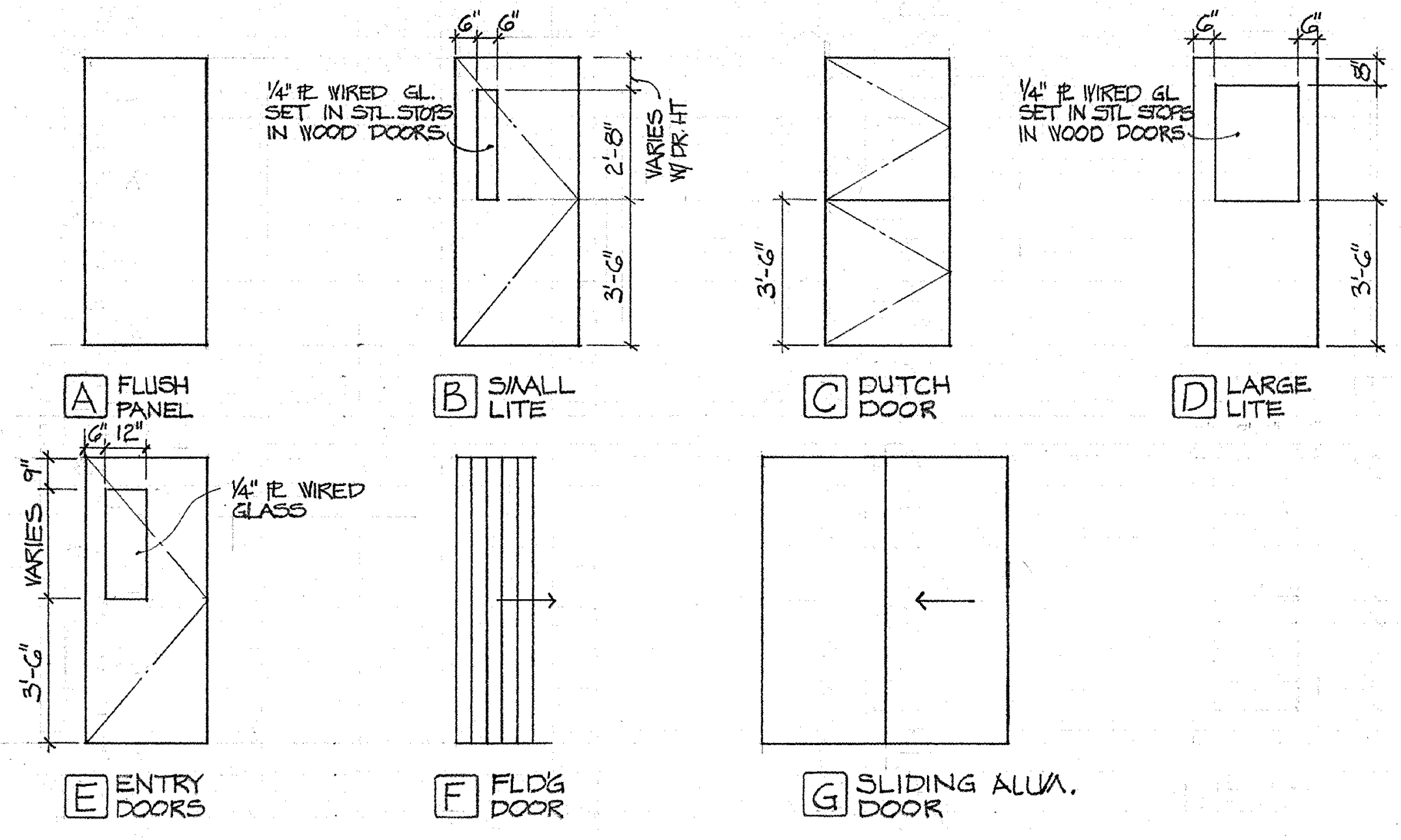

DOOR TYPES

MARK	LEAVES	SIZE	TYPE	DOOR MAT	FRAME MAT	ROOM	DETAIL	REMARKS	HDWRE GROUP
		SECTOR B							
1B	2	3'-0" x 1¾" x 7'-0"	E	H/M	STL	B19	5/34		1
2B	1	3'-0" x 1¾" x 7'-0"	A	SCW	WOOD	B29	7/33		3
3B	2	2'-6" x 1¾" x 6'-8"	A	SCW	EX WD	B16	①		11
4B	2	2'-8" x 1¾" x 6'-8"	A	SCW	EX WD	B19	①		12
5B	1	2'-8" x 1¾" x 6'-8"	A	SCW	EX. WD	B18	①		3
6B	2	2'-6" x 1¾" x 6'-8"	A	SCW	EX. WD	B15	①		11
7B	2	3'-0" x 1¾" x 6'-8"	A	SCW	WOOD	B14	16/33		13
8B	2	3'-0" x 1¾" x 7'-0"	E	H/M	STL	B20	4/34		1
9B	1	3'-0" x 1¾" x 7'-2"	A	H/M	STL	B7	1/34		14
10B	1	3'-0" x 1¾" x 7'-2"	A	H/M	STL	B3	1/34		14
11B	1	3'-0" x 1¾" x 7'-2"	A	H/M	STL	B1	1/34		14
12B	1	3'-0" x 1¾" x 7'-2"	A	H/M	STL	B1	3/34		14
13B	1	3'-0" x 1¾" x 7'-2"	A	H/M	STL	B2	1/34		14
14B	1	3'-0" x 1¾" x 7'-0"	B	SCW	STL	B6	3/33		15
15B	1	3'-0" x 1¾" x 7'-0"	B	SCW	STL	B6	3/33		15
16B	1	2'-8" x 1¾" x 7'-0"	A	SCW	STL	B4	3/33		3
17B	1	3'-0" x 1¾" x 7'-0"	B	SCW	WOOD	B2	23/33	SIMILAR	15
18B	1	3'-0" x 1¾" x 7'-0"	B	SCW	STL	B3	3/33		15
19B	1	3'-0" x 1¾ x 7'-0"	A	SCW	WOOD	B5	1/33	SEE ELEV 2/33	3
20B	1	3'-0" x 1¾" x 7'-0"	B	SCW	WOOD	B6	23/33		15
21B	1	3'-0" x 1¾" x 7'-0"	B	SCW	STL	B7	3/33		15
22B	1	3'-0" x 1¾" x 7'-0"	B	SCW	STL	B8	3/33		15
23B	1	3'-0" x 1¾" x 7'-0"	B	H/M *	STL *	B10	20/33	*DR. AND FRAME TO BE 1½HR. RATED	15
24B	1	3'-0" x 1¾" x 7'-0"	B	SCW	WOOD	B8	4/33		15
25B	1	3'-0" x 1¾" x 6'-8"	B	SCW	EX. WD	B22	①		15
26B	1	3'-0" x 1¾" x 6'-8"	B	SCW	EX. WD	B23	①		15
27B	1	3'-0" x 1¾" x 6'-8"	A	SCW	EX. WD	B25	①		4
28B	1	3'-0" x 1¾" x 6'-8"	A	SCW	EX. WD	B24	①		4
29B	1	3'-0" x 1¾" x 6'-8"	B	SCW	EX. WD	B26	①		15
30B	1	3'-0" x 1¾" x 6'-8"	B	SCW	EX. WD	B27	①		15
31B	1	8'-1½" WIDE x 3'-10" HIGH	*	STEEL	MTL	B9	22/33	*OVERHEAD DOOR	—
32B	1	3'-6" x 1¾" x 6'-8"	A	SCW	EX. WD	B13	①		16
33B	1	3'-0" x 1¾" x 7'-0"	A	SCW	WOOD	B11	1/33	SEE ELEV 6/33	6
34B	1	3'-0" x 1¾" x 7'-0"	A	SCW	WOOD	B12	1/33	SEE ELEV 6/33	6
35B	1	3'-0" x 1¾" x 6'-8"	A	SCW	WOOD	B10	16/33		15
36B	1	3'-0" x 1¾" x 6'-8"	A	SCW	WOOD	B9	16/33		2
37B	1	20'-6" WIDE x 8'-0" HIGH	F	FABRIC	WOOD	B13	21/33	PROVIDE W/ ROLLING BACK POST - TRACK FULL WIDTH OF ROOM	–
38B	1	10'-6" WIDE x 8'-0" HIGH	F	FABRIC	WOOD	B13	21/33		–
39B	1	13'-6" WIDE x 9'-8½" HIGH	F	FABRIC	WOOD	B6	12/33		–
40B	1	7'-6" WIDE x 9'-8½" HIGH	F	FABRIC	WOOD	B6	12/33		–
41B	1	6'-8" WIDE x 9'-8½" HIGH	F	FABRIC	WOOD	B6	12/33		–
42B	1	13'-10 WIDE x 9'-8½" HIGH	F	FABRIC	WOOD	B6	12/33		–
43B	1	5'-0" WIDE x 6'-8" HIGH	G	ALUM/GLASS	WOOD	B21	2/34	PREPARE FOR CYLINDER BY HARDWARE	17
44B	6	2'-8" x 1¾" x 6'-10"	SCW DR. PANELS FOR USE @ END OF LOCKER BASE ISLANDS 8/33						–
45B	2	3'-6" x 1¾" x 7'-0"	A	HM	STL	B21	15/34	1 HR RATED DOOR & FRAME	41

MARK	LEAVES	SIZE	TYPE	DOOR MAT	FRAME MAT	ROOM	DETAIL	REMARKS	HDWRE GROUP
		SECTOR C							
1C	1	3'-0" x 1¾" x 6'-8"	B	SCW	EX. WD	C1	①		18
2C	1	3'-0" x 1¾" x 6'-8"	B	SCW	EX. WD	C1	①		18
3C	1	3'-0" x 1¾" x 6'-8"	B	SCW	WOOD	C8	7/33		18
4C	1	3'-0" x 1¾" x 6'-8"	A	SCW	WOOD	C9	6/33		3
5C	1	3'-0" x 1¾" x 6'-8"	B	SCW	EX. WD	C8	①		19
6C	1	3'-0" x 1¾" x 6'-8"	B	SCW	WOOD	C15	7/33	SEE ELEV 4/33	6
7C	1	3'-0" x 1¾" x 6'-8"	B	SCW	WOOD	C19	1/33	SEE ELEV 4/33	18
8C	1	3'-0" x 1¾" x 6'-8"	A	SCW	WOOD	C16	1/33	SEE ELEV 4/33	3
9C	1	3'-0" x 1¾" x 6'-8"	A	SCW	WOOD	C17	1/33	SEE ELEV 4/33	3
10C	1	3'-0" x 1¾" x 6'-8"	A	SCW	WOOD	C18	1/33	SEE ELEV 4/33	3
11C	1	3'-0" x 1¾" x 6'-8"	B	SCW	EX. WD	C19	①		19
12C	1	3'-0" x 1¾" x 6'-8"	A	SCW	WOOD	C20	1/33	SEE ELEV 4/33	3
13C	1	3'-0" x 1¾" x 6'-8"	B	SCW	EX. WD	C22	①		19
14C	1	3'-0" x 1¾" x 6'-8"	A	SCW	WOOD	C21	1/33	SEE ELEV 4/33	3
15C	1	2'-6" x 1¾" x 6'-8"	A	SCW	WOOD	C24	1/33	SEE ELEV 4/33	3
16C	1	3'-0" x 1¾" x 6'-8"	A	SCW	WOOD	C25	1/33	SEE ELEV 4/33 1/32 LIGHT-PROOFING HARDWARE	20
17C	1	3'-0" x 1¾" x 6'-8"	B	SCW	WOOD	C23	6/33		3
18C	1	2'-8" x 1¾" x 6'-8"	B	SCW	EX. WD	C26	①		15
19C	1	3'-0" x 1¾" x 6'-8"	B	SCW	EX. WD	C27	①		15
20C	1	3'-0" x 1¾" x 6'-8"	A	SCW	EX. WD	C29	①		4
21C	1	3'-0" x 1¾" x 6'-8"	A	SCW	EX. WD	C28	①		3
22C	2	3'-2" x 1¾" x 7'-0"	A	SCW	EX. WD	C31	①		21
23C	2	3'-2" x 1¾" x 7'-0"	A	SCW	EX. WD	C31	①		21
24C	1	3'-6" x 1¾" x 7'-0"	A	SCW	EX. WD	C31	①		22
25C	1	3'-2" x 1¾" x 7'-0"	A	SCW	STL	C31	1/35		22
26C	2	3'-2" x 1¾" x 7'-0"	A	SCW	EX. WD	C31	①		21
27C	2	3'-0" x 1¾" x 7'-0"	A	SCW	WOOD	C34	6/33		13
28C	1	3'-0" x 1¾" x 7'-0"	A	SCW	WOOD	C35	7/33		23
29C	1	3'-0" x 1¾" x 7'-0"	A	SCW	WOOD	C37	6/33		23
30C	1	3'-0" x 1¾" x 7'-0"	A	SCW	WOOD	C37	7/33		24
31C	1	3'-0" x 1¾" x 7'-0"	A	SCW	WOOD	C47	9/35		3
32C	1	3'-0" x 1¾" x 7'-0"	A	SCW	WOOD	C46	15/33	VERIFY DOOR WIDTH W/ AVAILABLE WIDTH BTWN EXST'G WALLS	3
33C	1	2'-6" x 1¾" x 7'-0"	A	SCW	WOOD	C48	6/33		20
34C	1	3'-0" x 1¾ x 7'-2"	A	SCW	STL	C52	SEE REMARK	REMOVE EXIST'G 6" CURB, DR & 5½" STL. FRAME. INSTALL NEW DR. IN 5¾" STL. FRAME.	27
35C	1	3'-0" x 1¾" x 7'-2"	A	SCW	STL.	C44	14/33		23
36C	1	2'-6" x 1¾" x 6'-0"	C	SCW	WOOD	C42	16/34	DUTCH DOOR, BTM PORTION FIXED-SECURE TO FRAME	25
37C	1	3'-0" x 1¾" x 6'-8"	A	SCW	STL	C42	15/33		3
38C	2	3'-0" x 1¾" x 6'-10"	B	SCW	STL	C52	2/35		21
39C	1	3'-0" x 1¾" x 6'-10"	A	SCW	STL	C55	2/33 Ⓒ		4
40C	1	3'-0" x 1¾" x 6'-10"	C	SCW	STL	C53	Ⓒ 2/33	4/38 Ⓐ DUTCH DOOR, BTM PORTION FIXED-SECURE TO FRAME	25
41C	1	3'-0" x 1¾" x 6'-10"	A	SCW	STL	C54	2/33 Ⓒ		3
42C	1	3'-0" x 1¾" x 6'-10"	A	SCW	STL	C53	Ⓐ 2/33		3
43C	1	3'-0" x 1¾" x 6'-8"	D	HM.*	STL*	C54	8/35	REMOVE EXST'G DOORS, MULLION & FRAME-VERIFY DIMEN. *DR. & FRAME GALV.	3
44C	1	3'-0" x 1¾" x 6'-10"	A	SCW	STL	C57	Ⓐ 2/33		3
45C	1	3'-0" x 1¾" x 6'-8"	A	HM*	STL*	C58	8/35	*DR. & FRAME GALVANIZED	4
46C	2	3'-0" x 1¾" x 6'-8"	E	SCW	EX. WD.	C61	①		21
47C	1	3'-0" x 1¾" x 6'-10"	A	H.M.	STL	C62	11/34		7
48C	2	2'-10" x 1¾" x 6'-10"	A	H.M.	STL	C64	11/34	ASTRAGAL ON NORTH LEAF	8
49C	1	3'-0" x 1¾" x 6'-10"	A	SCW	STL	C63	2/33 Ⓒ		23
50C	1	3'-0" x 1¾" x 6'-10"	C	SCW	STL	C63	Ⓒ 2/33	DUTCH DOOR ~ BTM LEAF INACTIVE, SECURE TO FRAME - SHELF SIM. TO @ 3'-6" OFF FLR. 16/34	25
51C	1	3'-0" x 1¾" x 6'-10"	A	SCW	STL	C65	2/33 Ⓒ		27
52C	1	2'-8" x 1¾" x 6'-10"	A	SCW	STL	C67	9/33	VERIFY AVAILABLE WIDTH BTWN EXST'G PILASTERS	5
53C	1	3'-0" x 1¾" x 6'-10"	A	SCW	STL	C51	2/33 Ⓒ		7
54C	1	2'-6" x 1¾" x 6'-8"	A	SCW	EX. WD.	C50	①		3
55C	1	3'-6" x 1¾" x 7'-0"	A	SCW	STL	C68	10/33		4
56C	1	3'-4" x 1¾" x 7'-0"	A	SCW	STL	C65	17/33		27
57C	1	3'-0" x 1¾" x 6'-10"	A	SCW	STL	C69	2/33 Ⓒ		27
58C	1	3'-0" x 1¾" x 6'-10"	A	SCW	STL	C69	Ⓒ 2/33		2
59C	1	3'-0" x 1¾" x 6'-10"	A	SCW	STL	C71	2/33 Ⓒ		19
60C	1	3'-0" x 1¾" x 6'-10"	A	SCW	STL	C74	Ⓒ 2/33		27
61C	1	3'-0" x 1¾" x 6'-10"	C	H.M.*	STL*	C79	2/33 Ⓒ	4/38 Ⓒ * DR & FRAME GALVANIZED	3
62C	1	3'-0" x 1¾" x 6'-10"	A	SCW	STL	C79	Ⓐ 2/33		2
63C	1	3'-0" x 1¾" x 6'-10"	C	H.M.*	STL*	C79	2/33 Ⓒ	4/38 Ⓒ * DR. & FRAME GALVANIZED	3
64C	1	3'-0" x 1¾" x 6'-10"	A	SCW	STL	C83	Ⓒ 2/33		3
65C	1	3'-4" x 1¾" x 7'-0"	A	SCW	STL	C82	17/33		19
66C	1	3'-0" x 1¾" x 6'-10"	A	SCW	STL	C84	Ⓒ 2/33		2
67C	1	3'-6" x 1¾" x 7'-0"	A	SCW.	EX. WD.	C85	①		4
68C	1	3'-0" x 1¾" x 6'-8"	A	SCW	WOOD	C85	8/33		26
69C	1	2'-6" x 1¾" x 7'-0"	A	SCW	EX. WD	C86	①		3
70C	1	3'-0" x 1¾" x 6'-10"	A	SCW	STL	C88	Ⓒ 2/33		3
71C	1	3'-0" x 1¾" x 6'-8"	A	HM*	STL*	C61	8/35	REMOVE EXST'G DR & FRAME. * DR. & FRAME GALVANIZED	22
72C	1	3'-0" x 1¾" x 6'-4"	A	SCW	STL	C97	2A/35	1-HR RATED DR & FRAME, VERIFY DOOR HT.	37
73C	1	3'-0" x 1¾" x 6'-4"	A	SCW	STL	C97	2A/35	1-HR RATED DR & FRAME, VERIFY DOOR HT.	37
74C	1	3'-6" x 1¾" x 7'-0"	A	SCW	EX. WD	C32	12/35		3
75C	2	3'-0" x 1¾" x 7'-0"	A	SCW	STL	C32	7A/33		40

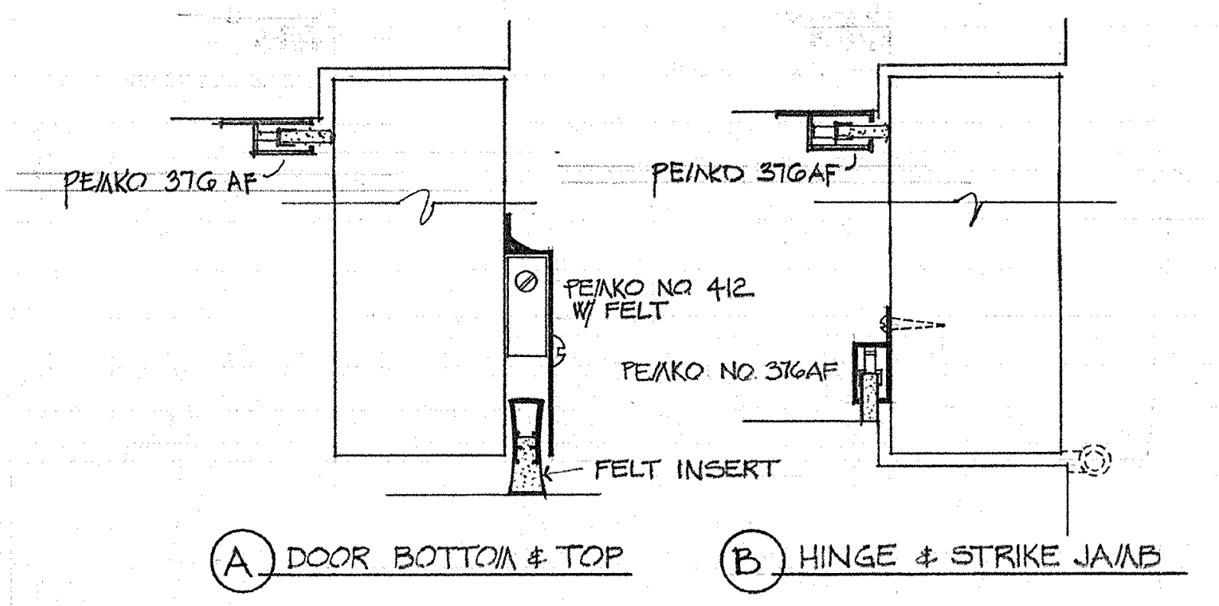

1/32 LIGHT-PROOFING HARDWARE
DRS. 51E & 52E, 16C 6" = 1'-0"

FOOTNOTES:

① ∘ VERIFY EXST'G FRAME AND REQ'D DR. SIZE
∘ REMOVE EXST'G DOOR & HARDWARE
∘ REPAIR EXISTING FRAME, STOPS, & ABANDONED HINGE POINTS TO ACHIEVE A SUBSTANTIAL BASE FOR NEW HARDWARE AND A REASONABLE APPEARANCE.
∘ FIT NEW DOOR & HARDWARE TO EXISTING FRAMES.

MARK	LEAVES	SIZE	TYPE	DOOR MAT	FRAME MAT	ROOM	DETAIL	REMARKS	HDWRE GROUP
		SECTOR D							
1D	2	3'-0" x 1¾" x 6'-8"	B	S.C.W.	WOOD	P1	18/33	ENLARGE EXIST'G OPEN'G TO RECEIVE NEW DOORS	28
2D	1	3'-0" x 1¾" x 6'-8"	A	S.C.W.	EX. WD.	D3	①		3
3D	1	3'-0" x 1¾" x 6'-8"	A	S.C.W.	EX. WD.	D4	①		4
4D	1	3'-0" x 1¾" x 6'-8"	B	S.C.W.	EX. WD.	D5	①		29
5D	1	3'-0" x 1¾" x 6'-8"	B	S.C.W.	EX. WD.	D5	①		29
6D		3'-0" x 1¾" x 6'-8"	A	H/M *	EX. STL.	C37		*DOOR TO BE 1½" HR. RATED	39
7D		4'-0" x 1¾" x 6'-8"	A	H/M *	EX. STL.	C40		*DOOR TO BE 1½" HR. RATED	38
8D	1	3'-0" x 1¾" x 6'-8"	B	S.C.W.	EX. WD.	D7	①		15
9D	1	3'-0" x 1¾" x 6'-8"	A	S.C.W.	WOOD	D16	1/33	SEE ELEV 8/33	3
10D	1	3'-0" x 1¾" x 6'-8"	E	H/M	STL	D17	10/34		7
11D	1	3'-8" x 1¾" x 6'-8"	E	H/M	STL.	D18	14/34		30
12D	1	3'-0" x 1¾" x 6'-8"	A	H/M	EX. WD.	D20	①		31
13D	1	3'-0" x 1¾" x 6'-8"	A	SCW	WOOD	D20	6/33		3
14D	1	3'-6" x 1¾" x 6'-8"	A	H/M	STL	D19	4/35		30
15D	1	3'-0" x 1¾" x 7'-2"	A	H/M*	STL*	D23	9/34	*DR. & FRAME GALVANIZED	32
16D	2	3'-0" x 1¾" x 7'-2"	E	H.M.	STL.	D25	1/34	SEE ELEV 4/34	1
17D	2	3'-0" x 1¾" x 7'-10"	A	SCW	STL	D26	2/33 Ⓒ		13
18D	1	3'-8" x 1¾" x 7'-2"	E	H.M.*	STL.*	D31	8/34	*DR. & FRAME GALVANIZED	22
19D	1	3'-0" x 1¾" x 7'-2"	A	SCW	STL	D27	2/33 Ⓒ		3
20D	1	3'-0" x 1¾" x 7'-2"	A	SCW	STL	D28	Ⓒ 2/33		4
21D	1	3'-0" x 1¾" x 7'-2"	A	SCW	STL	D29	2/33 Ⓒ		4
22D	2	3'-0" x 1¾" x 7'-2"	E	H.M.	STL.	D30	1/34	SEE ELEV 4/34	1
23D		UNASSIGNED							–
		SECTOR E							
1E	1	3'-0" x 1¾" x 7'-2"	A	H.M.	STL	E1	1/34		33
2E	1	3'-0" x 1¾" x 7'-2"	A	H.M.	STL	E2	1/34		33
3E	1	3'-0" x 1¾" x 7'-2"	A	H.M.	STL	E3	1/34		33
4E	1	3'-0" x 1¾" x 7'-2"	A	H.M.	STL	E11	1/34		33
5E	1	3'-0" x 1¾" x 7'-0"	A	SCW	STL	E9	3/33		3
6E	1	13'-2" WIDE x 9'-8½" HIGH	F	FABRIC	WOOD	E4	13/33		—
7E	1	3'-0" x 1¾" x 7'-2"	A	H/M	STL	E4	1/34		33
8E	1	3'-0" x 1¾" x 7'-0"	A	SCW	STL	E6	3/33		3
9E	1	2'-6" x 1¾" x 7'-0"	A	SCW	STL	E5	3/33		34
10E	1	3'-0" x 1¾" x 7'-0"	A	SCW	WOOD	E10	1/33	SEE ELEV 7/33	3
11E	1	3'-0" x 1¾" x 7'-2"	B	SCW.	STL	E11	Ⓒ 2/33		35
12E	1	3'-0" x 1¾" x 7'-2"	A	H/M	STL	E12	3/34		4
13E	2	2'-6" x 1¾" x 7'-2"	A	H/M	STL	E13	3/34		13
14E	1	3'-0" x 1¾" x 7'-2"	A	H/M	STL	E15	3/34		4
15E	1	3'-0" x 1¾" x 7'-0"	A	SCW	WOOD	E16	1/33	SEE ELEV 1/33	6
16E	1	3'-0" x 1¾" x 7'-2"	A	H/M	STL	E17	1/34		33
17E		UNASSIGNED							—
18E	1	3'-0" x 1¾" x 7'-0"	A	SCW	WOOD	E20	1/33	SEE ELEV 5/33	3
19E		UNASSIGNED							3
20E	1	3'-0" x 1¾" x 7'-2"	A	H/M	STL	E17	1/34		33
21E	1	3'-0" x 1¾" x 7'-2"	A	H/M	STL	E22	3/34		33
22E	1	3'-0" x 1¾" x 7'-2"	A	H.M.	STL	E18	1/34		33
23E		UNASSIGNED							–
24E	1	3'-0" x 1¾" x 7'-2"	A	H.M.	STL	E24	1/34		33
25E	1	3'-0" x 1¾" x 7'-2"	A	H.M.	STL	E25	1/34		33
26E	1	3'-0" x 1¾" x 7'-2"	A	H.M.	STL	E26	1/34		33
27E	1	3'-0" x 1¾" x 7'-2"	A	H.M.	STL	E27	1/34		33
28E	1	3'-0" x 1¾" x 7'-0"	B	SCW.	STL	E28	3/33		35
29E	1	3'-0" x 1¾" x 7'-0"	B	SCW	STL	E29	3/33		35
30E	1	3'-0" x 1¾" x 7'-0"	B	SCW	STL	E28	3/33		35
31E	1	UNASSIGNED							—
32E	1	3'-0" x 1¾" x 7'-0"	B	SCW	STL	E25	3/33		35
33E	1	3'-0" x 1¾" x 7'-0"	B	SCW	STL	E25	3/33		35
34E	1	3'-0" x 1¾" x 7'-0"	B	SCW	STL	E35	3/33		35
35E	1	3'-0" x 1¾" x 7'-2"	A	H/M	STL	E35	1/34		33
36E	2	3'-0" x 1¾" x 7'-2"	E	H.M.	STL	E36	1/34	SEE ELEV 3/34	1
37E	1	3'-0" x 1¾" x 7'-2"	B	SCW	STL	E35	Ⓒ 2/33		16
38E	1	3'-0" x 1¾" x 7'-2"	B	SCW	STL	E46	2/33 Ⓒ		16
39E	1	3'-0" x 1¾" x 7'-2"	B	SCW	STL	E45	Ⓒ 2/33		16
40E	1	3'-0" x 1¾" x 7'-2"	B	SCW	STL	E34	2/33 Ⓒ		16
41E	1	3'-0" x 1¾" x 7'-2"	A	SCW	STL	E32	Ⓒ 2/33		4
42E	2	2'-6" x 1¾" x 7'-2"	A	SCW	STL	E31	2/33 Ⓒ		13
43E	1	3'-0" x 1¾" x 7'-2"	A	SCW	STL	E30	Ⓒ 2/33		4
44E	1	3'-0" x 1¾" x 7'-2"	B	SCW	STL	E29	2/33 Ⓒ		16
45E	2	3'-0" x 1¾" x 7'-2"	E	H.M.	STL	E36	1/34	SEE ELEV. 3/34	1
46E	1	3'-0" x 1¾" x 7'-2"	B	SCW	STL	E37	2/33 Ⓒ		16
47E	1	3'-0" x 1¾" x 7'-0"	A	SCW	STL	E38	3/33		3
48E	1	3'-0" x 1¾" x 7'-0"	B	SCW	STL	E40	3/33		35
49E	1	3'-0" x 1¾" x 7'-0"	B	SCW	STL	E40	3/33		35
50E	1	3'-0" x 1¾" x 7'-0"	B	SCW	STL	E40	3/33		16
51E	1	3'-0" x 1¾" x 7'-0"	A	SCW	STL	E42	3/33	1/32 LIGHT-PROOFING HARDWARE	20
52E	1	2'-6" x 1¾" x 7'-0"	A	SCW	STL	E43	3/33	1/32 LIGHT-PROOFING HARDWARE	20
53E	1	2'-8" x 1¾" x 7'-0"	A	SCW	STL	E44	3/33		3
54E	1	3'-0" x 1¾" x 7'-0"	B	SCW	STL	E41	3/33		16
55E	1	3'-0" x 1¾" x 7'-0"	B	SCW	STL	E46	3/33		35
56E	1	3'-0" x 1¾" x 7'-0"	B	SCW	STL	E40	3/33		35
57E	1	3'-0" x 1¾" x 7'-0"	B	SCW	STL	E48	3/33		35
58E	1	3'-0" x 1¾" x 7'-2"	A	H.M.	STL	E47	1/34		33
59E	1	3'-0" x 1¾" x 7'-2"	A	H.M.	STL	E48	1/34		33
60E	1	3'-0" x 1¾" x 7'-2"	A	H.M.	STL	E49	1/34		33
61E	1	3'-0" x 1¾" x 7'-2"	B	H.M.	STL	E50	Ⓒ 2/33		3
62E	1	3'-0" x 1¾" x 7'-2"	B	H.M.	STL	E51	3/33	← DTL SIM, PROVIDE JAMB ANCHORS FOR 2x3 WOOD STUDS	3
63E	1	3'-0" x 1¾" x 7'-2"	A	H.M.	STL	E51	6/35		36
64E	1	6'-0" WIDE x 6'-8" HIGH	G	ALUM/GLASS	MASONRY	E49	7/35	PREPARE FOR CYLINDER BY HARDWARE	17
65E	6	2'-8" x 1¾" x 5'-10"	SCW DR. PANELS FOR USE @ END OF LOCKER BASE ISLANDS 8/32						—
66E		UNASSIGNED							—

DOOR SCHEDULE

SWEET HOME HIGH SCHOOL
ADDITIONS AND ALTERATIONS 1974
DISTRICT 55 LINN COUNTY, OREGON

ARCHITECTS
HAMLIN, MARTIN,
SCHULTZ & GEYER
AIA
159 W. 12TH EUGENE, OREGON 97401

A
32
JOB NO.

REGISTERED ARCHITECT
CLARE K. HAMLIN
Clare K Hamlin
EUGENE, OREGON
STATE OF OREGON

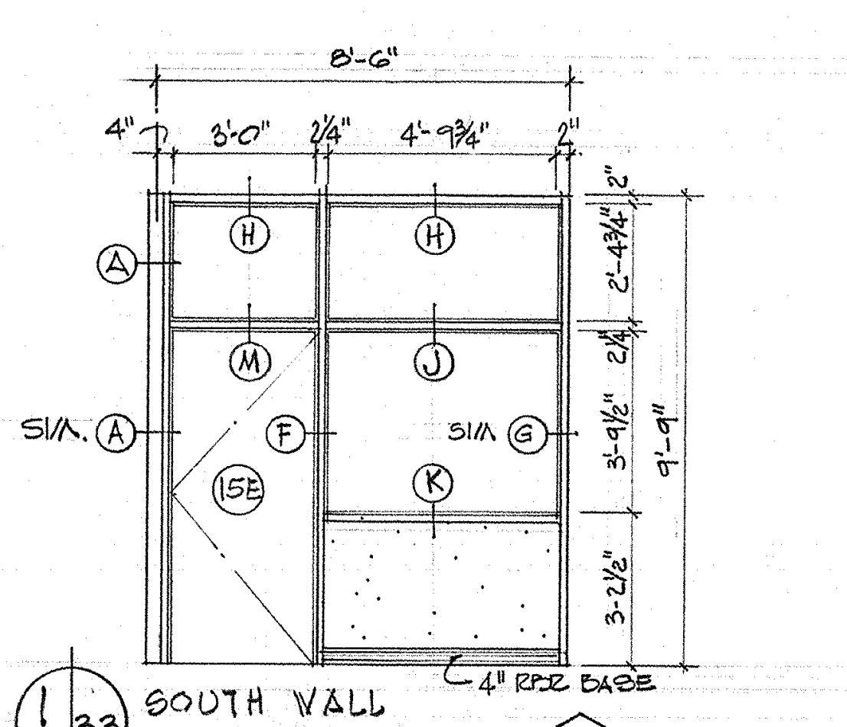
8'-6"
SIM.
4" BSE BASE
1/33 SOUTH WALL LIBRARY CONF (E16)
(VIEWED FROM LIBRARY E17) 1/4"=1'-0"

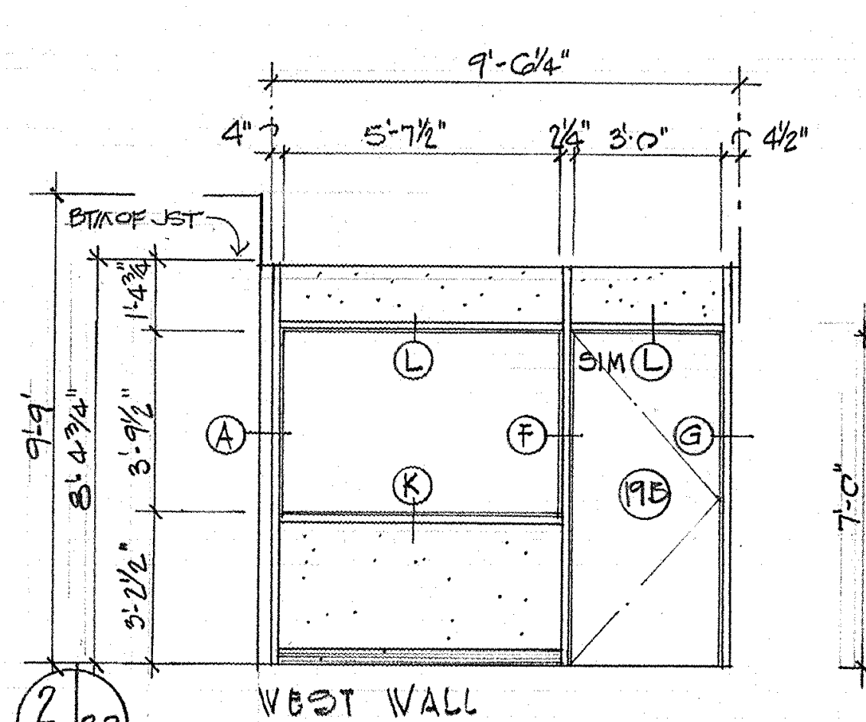
9'-6¼"
BTM OF JST
2/33 WEST WALL ENGLISH WORK CTR OFFICE

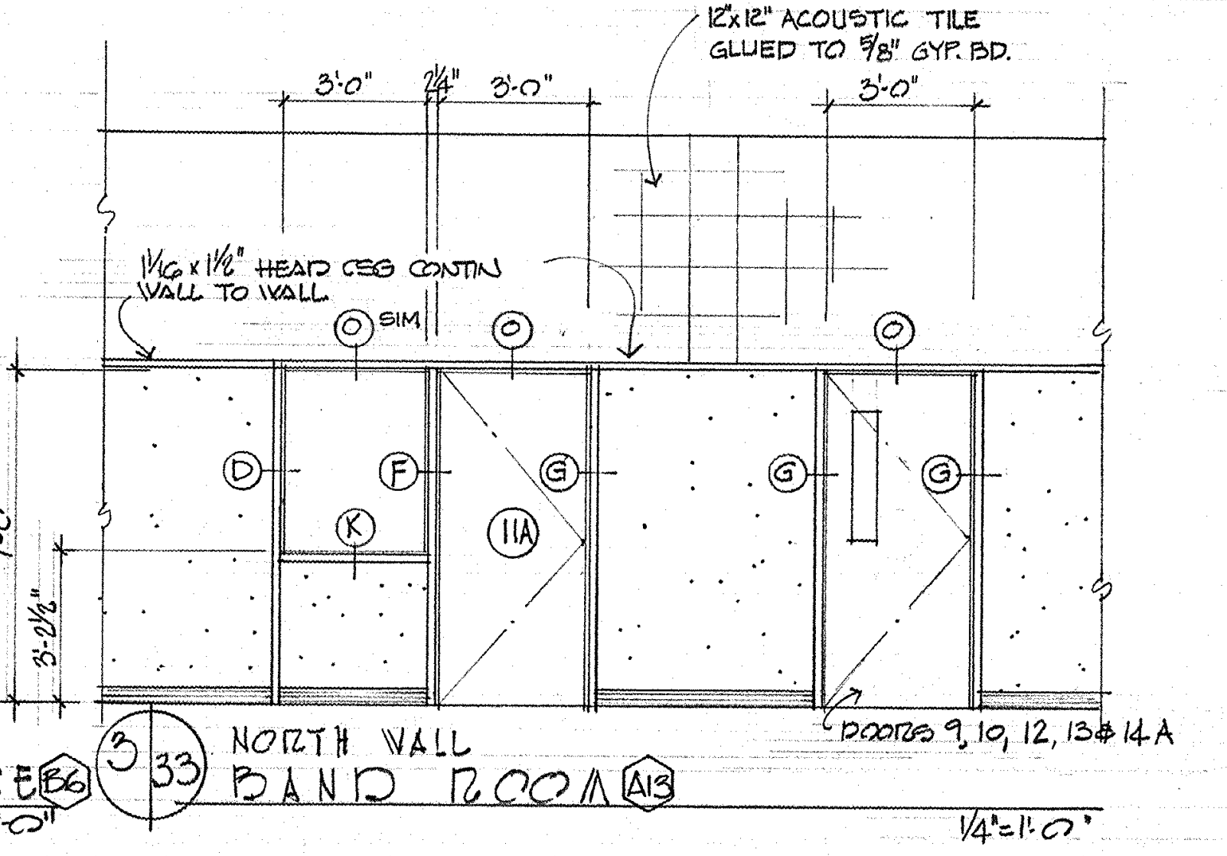
12"x12" ACOUSTIC TILE GLUED TO ⅝" GYP. BD.
1½"x1½" HEAD CEG CONTIN WALL TO WALL
DOORS 9, 10, 12, 13 & 14 A
3/33 NORTH WALL BAND ROOM (A13) 1/4"=1'-0"

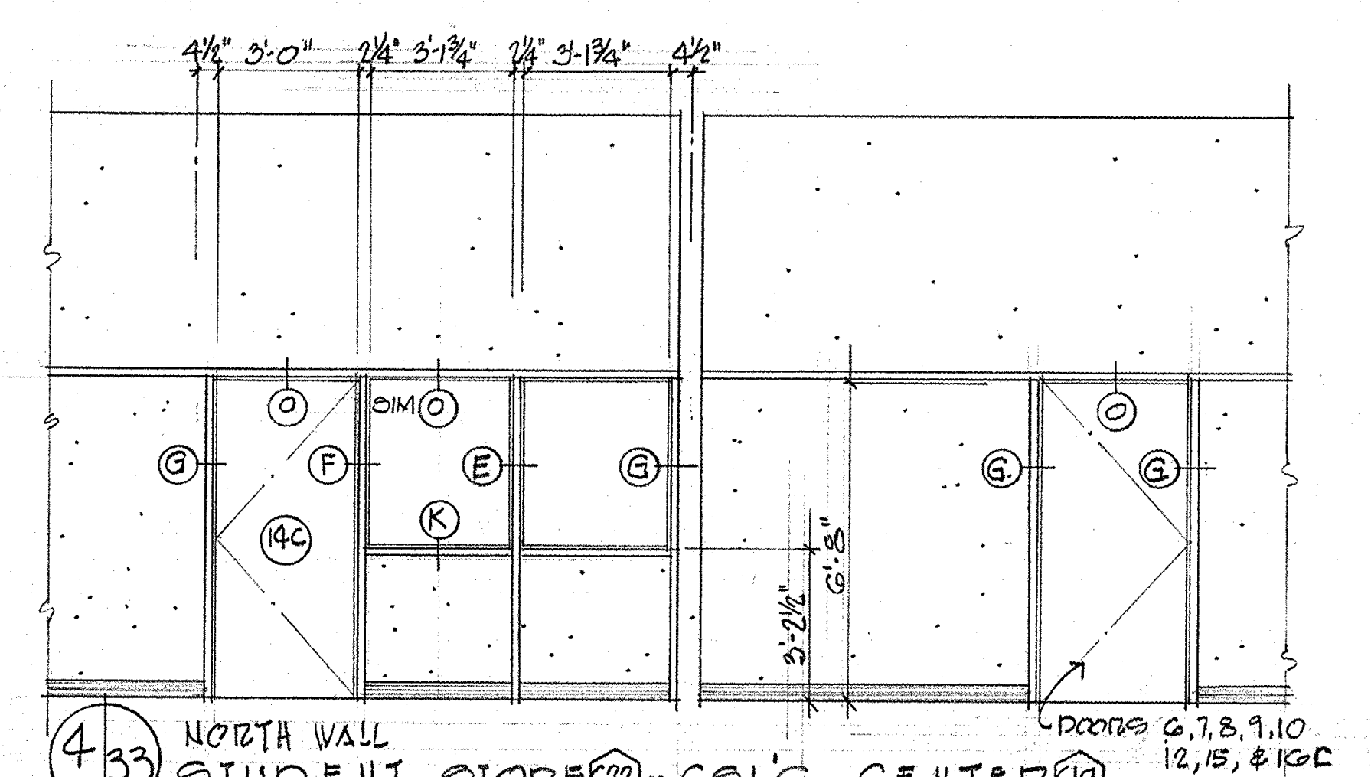
DOORS 6, 7, 8, 9, 10, 12, 13, & 14C
4/33 NORTH WALL STUDENT STORE (E22) - COL'G CENTER (E4) 1/4"=1'-0"

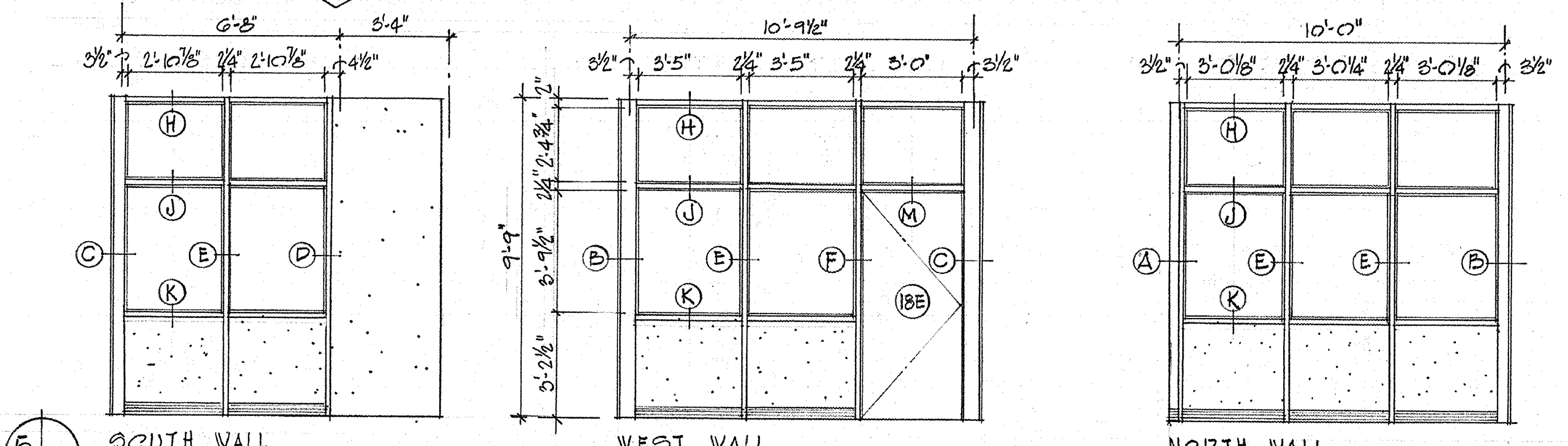
WEST WALL
NORTH WALL
5/33 SOUTH WALL LIBRARY OFFICE (E20)
(VIEWED FROM LIBRARY E17) 1/4"=1'-0"

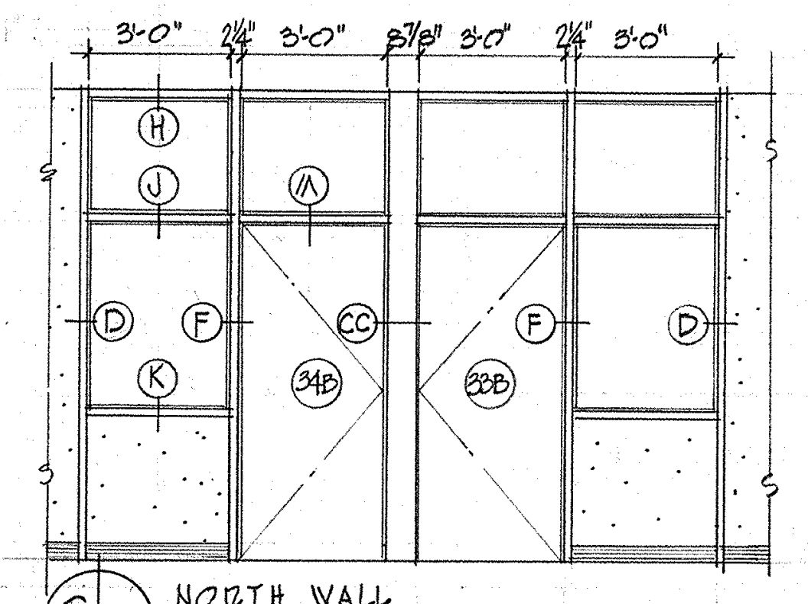
6/33 NORTH WALL JOURNALISM (E10) 1/4"=1'-0"

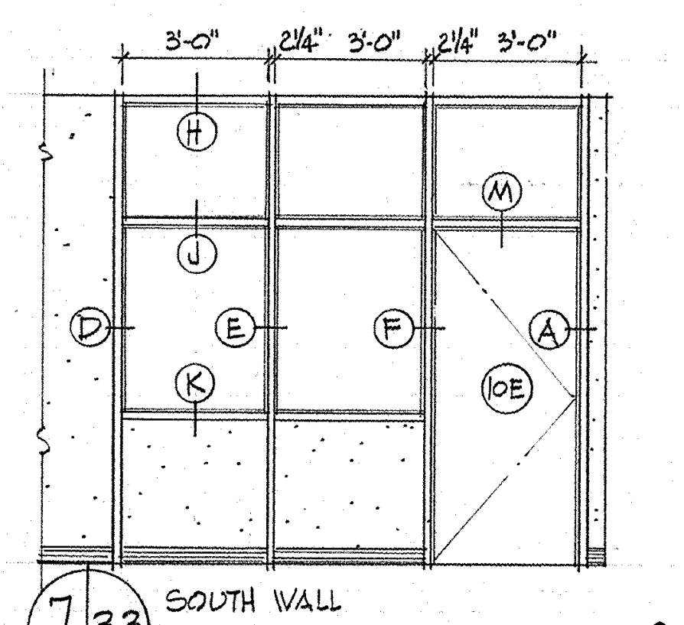
7/33 SOUTH WALL HOMEMAKING OFFICE (E7) 1/4"=1'-0"

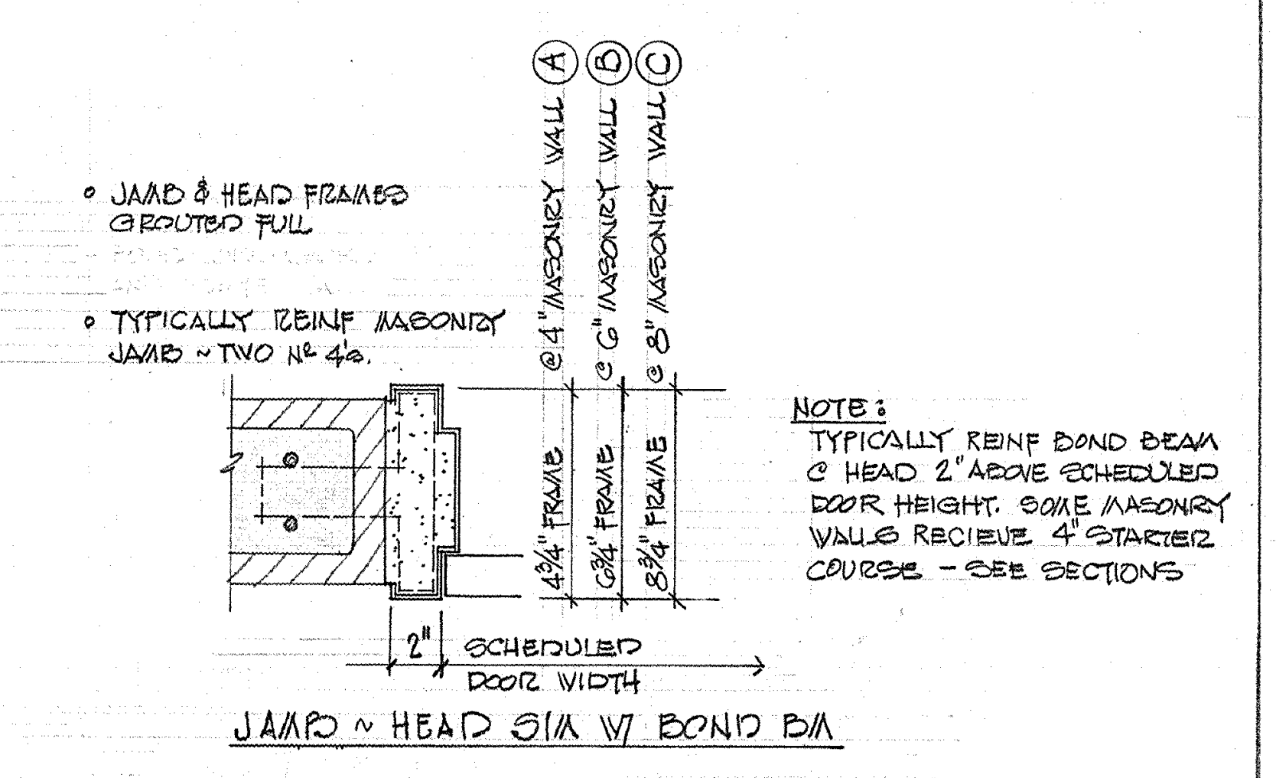
JAMB & HEAD FRAMES GROUTED FULL
TYPICALLY REINF MASONRY JAMB ~ TWO #4s.
NOTE: TYPICALLY REINF BOND BEAM @ HEAD 2" ABOVE SCHEDULED DOOR HEIGHT. SOME MASONRY WALLS RECIEVE 4" STARTER COURSE ~ SEE SECTIONS
SCHEDULED DOOR WIDTH
JAMB ~ HEAD SIM W/ BOND BM
2/33 NEW MASONRY WALL ~ INTERIOR DOORS 1½"=1'-0"

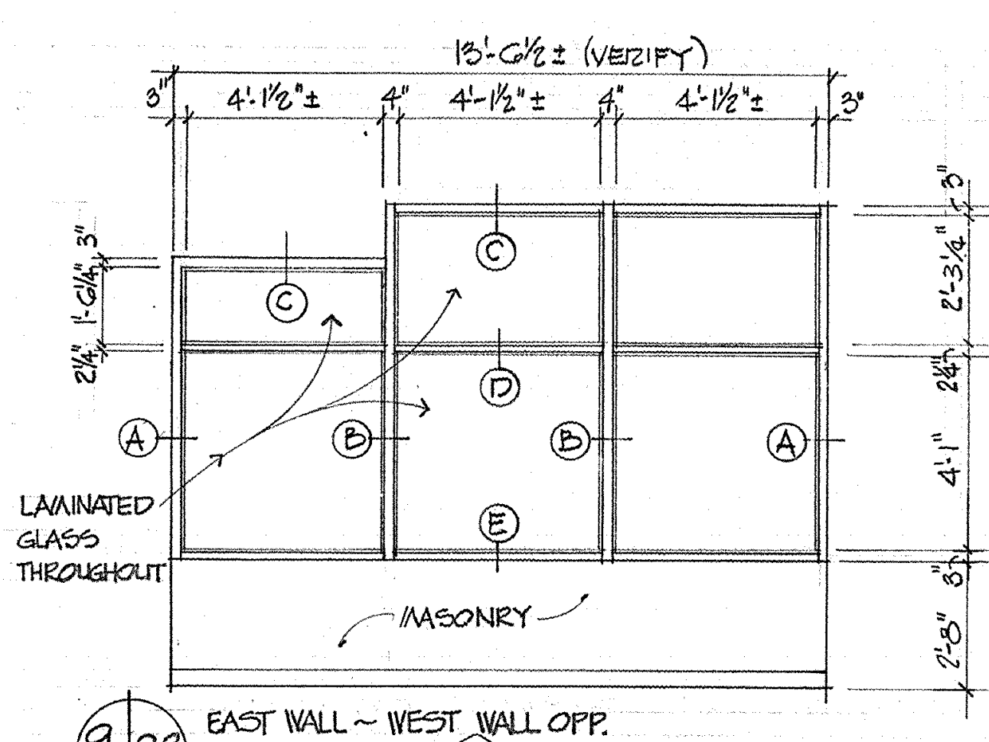
LAMINATED GLASS THROUGHOUT
MASONRY
9/33 EAST WALL ~ WEST WALL OPP. OFFICE (E71)

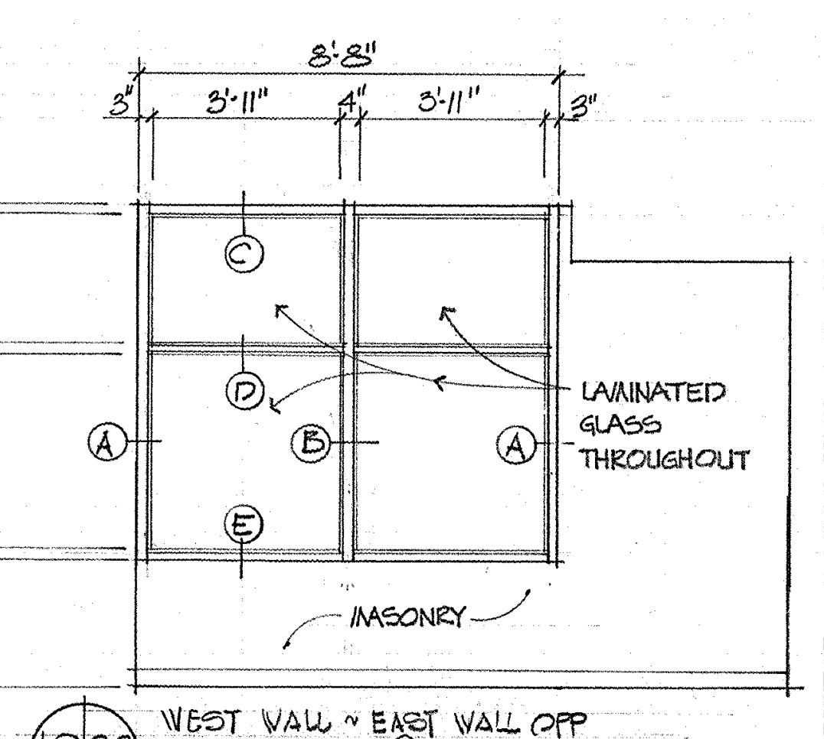
LAMINATED GLASS THROUGHOUT
MASONRY
10/33 WEST WALL ~ EAST WALL OPP OFFICE (E8)

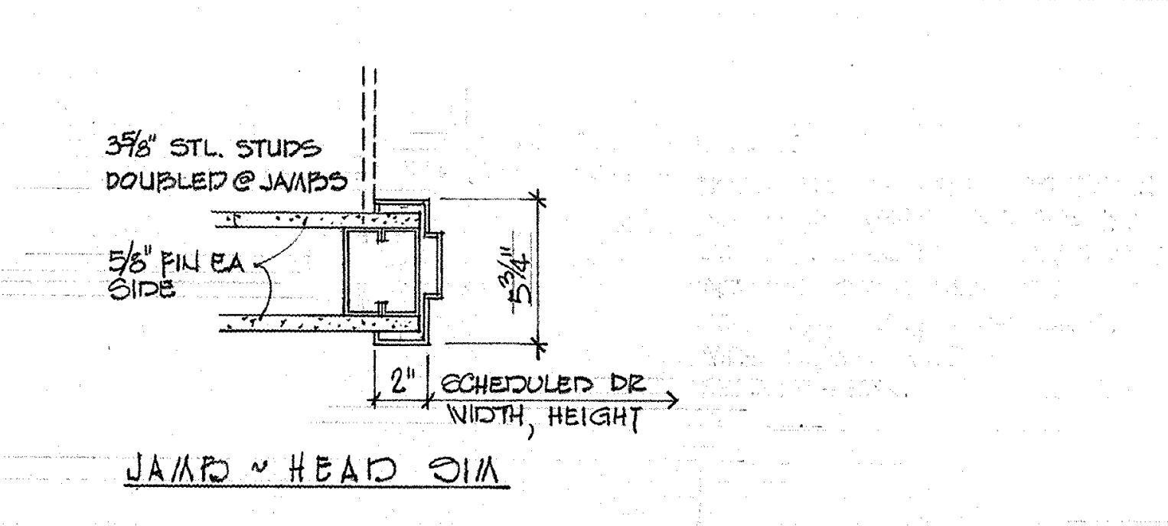
3⅝" STL STUDS DOUBLED @ JAMBS
⅝" FIN EA SIDE
SCHEDULED DR WIDTH, HEIGHT
JAMB ~ HEAD SIM
3/33 NEW STL STUD WALL ~ INTERIOR DOORS 1½"=1'-0"

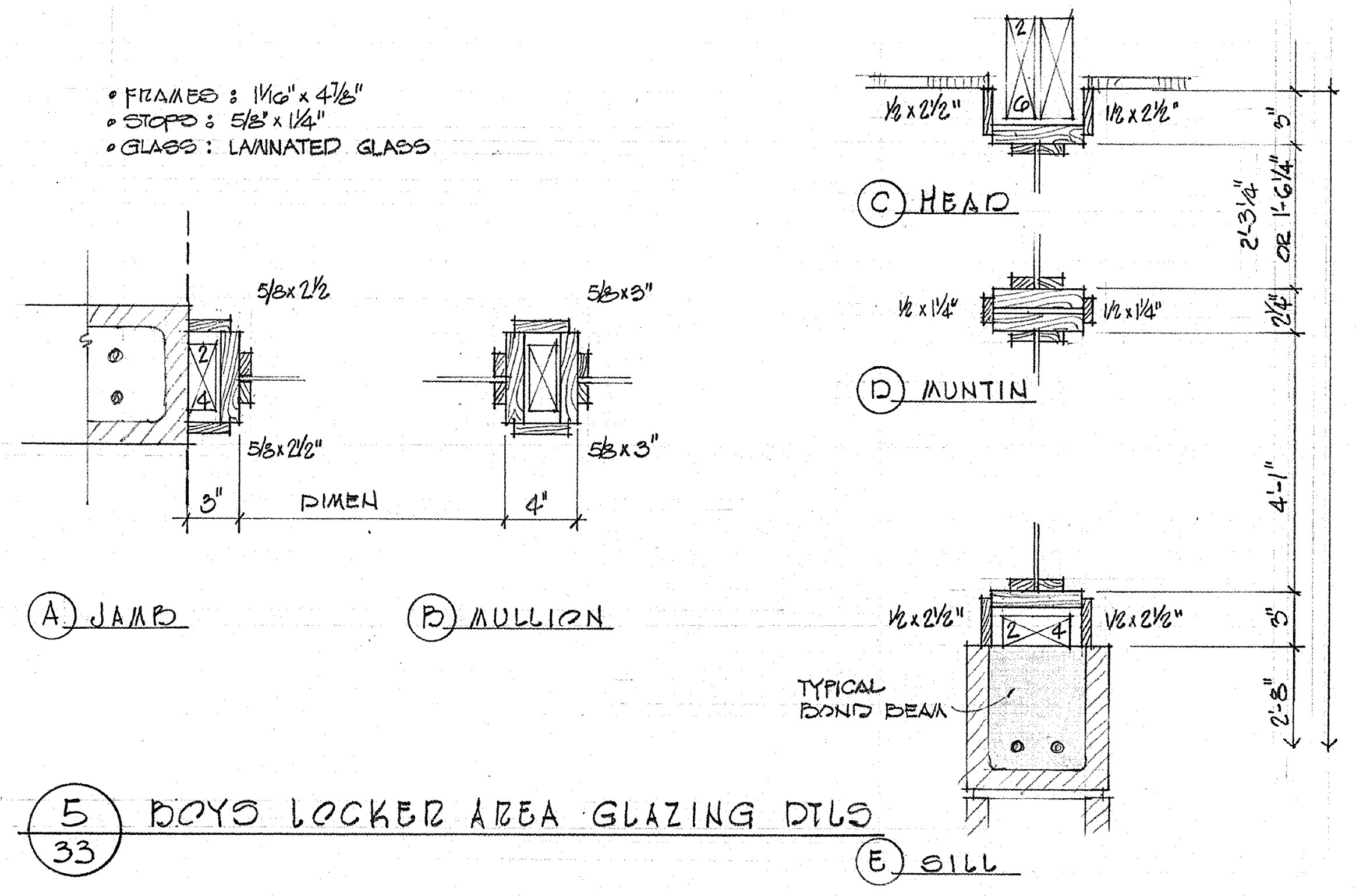
FRAMES: 1½" x 4⅞"
STOPS: ⅝" x 1¼"
GLASS: LAMINATED GLASS
C HEAD
D MUNTIN
DIMEN
TYPICAL BOND BEAM
A JAMB
B MULLION
E SILL
5/33 BOYS LOCKER AREA GLAZING DTLS

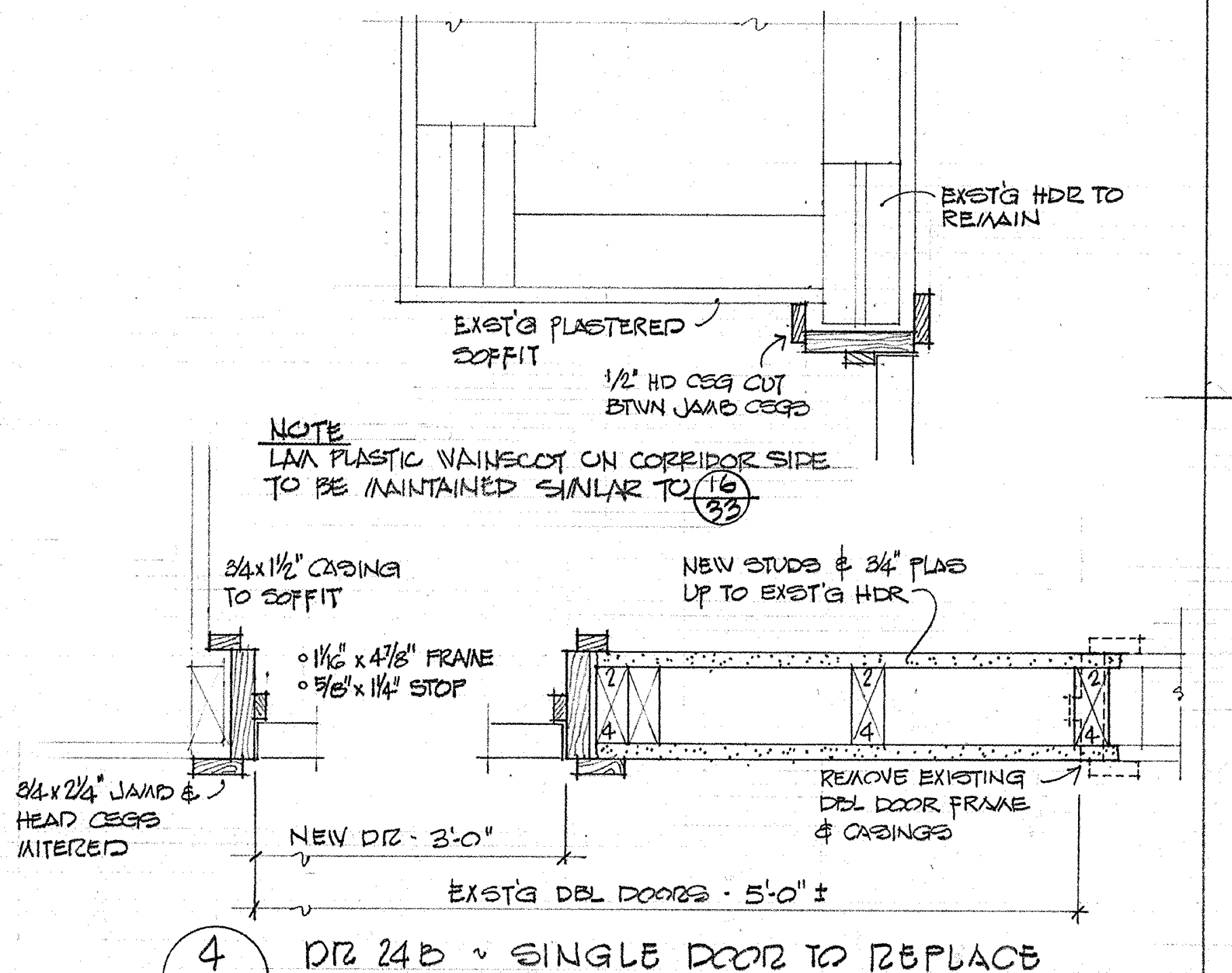
EXST'G HDR TO REMAIN
EXST'G PLASTERED SOFFIT
½" HD CEG CUT BTWN JAMB CEGS
NOTE: LAM PLASTIC WAINSCOT ON CORRIDOR SIDE TO BE MAINTAINED SIMILAR TO 16/33
¾x1½" CASING TO SOFFIT
NEW STUDS & ¾" PLAS UP TO EXST'G HDR
1½x4⅞" FRAME
⅝x1¼" STOP
REMOVE EXISTING DBL DOOR FRAME & CASINGS
NEW DR ~ 3'-0"
EXST'G DBL DOORS ~ 5'-0"±
4/33 DR 24B ~ SINGLE DOOR TO REPLACE EXST'G DBL DOOR 1½"=1'-0"

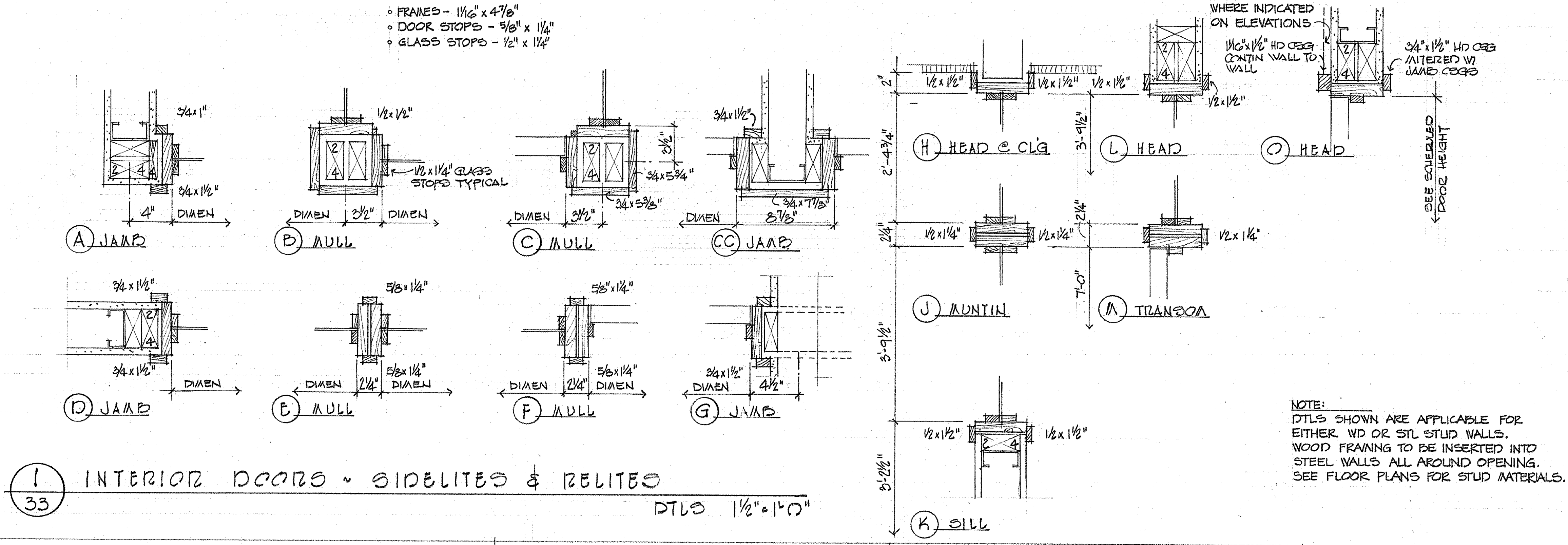
FRAMES ~ 1½" x 4⅞"
DOOR STOPS ~ ⅝" x 1¼"
GLASS STOPS ~ ½" x ½"
A JAMB
B MULL
C MULL
CC JAMB
D JAMB
E MULL
F MULL
G JAMB
H HEAD @ CLG
L HEAD
O HEAD
J MUNTIN
M TRANSOM
K SILL
ACOUSTIC TILE WHERE INDICATED ON ELEVATIONS
1½"x1½" HD CEG CONTIN WALL TO WALL
¾"x1½" HD CEG MITERED W/ JAMB CEGS
SEE SCHEDULED DOOR HEIGHT
NOTE: DTLS SHOWN ARE APPLICABLE FOR EITHER WD OR STL STUD WALLS. WOOD FRAMING TO BE INSERTED INTO STEEL WALLS ALL AROUND OPENINGS. SEE FLOOR PLANS FOR STUD MATERIALS.
1/33 INTERIOR DOORS ~ SIDELITES & RELITES
DTLS 1½"=1'-0"

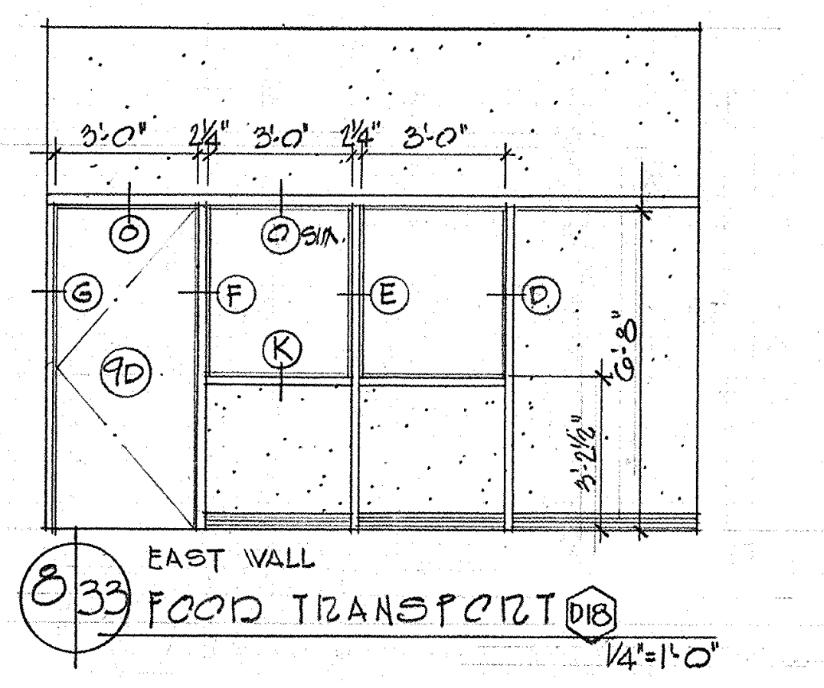
8/33 EAST WALL FOOD TRANSPORT (E18) 1/4"=1'-0"

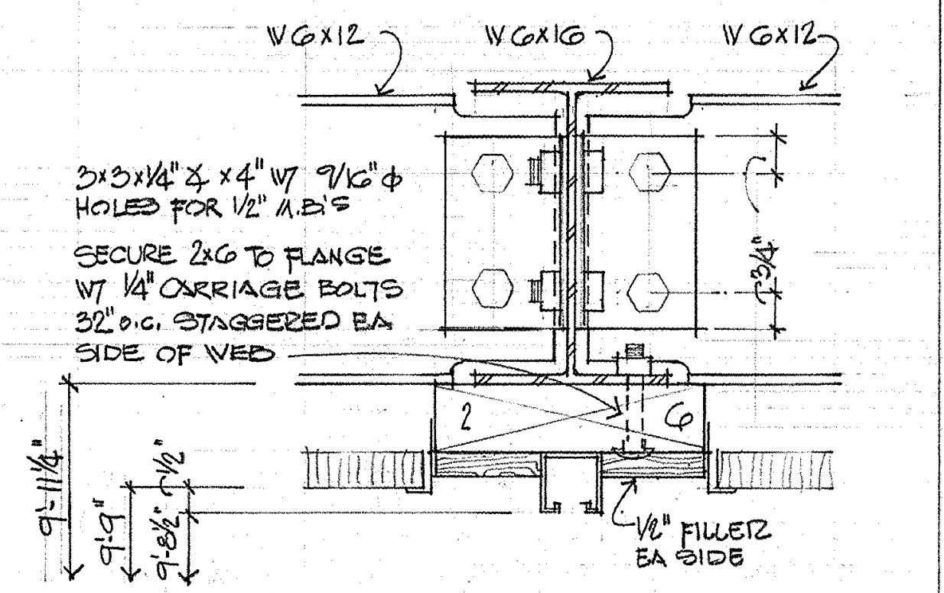
W 6x12
W 6x16
3½x3½x¼ x 4" W/ 9/16"φ HOLES FOR ½" A.B.'S
SECURE 2x6 TO FLANGE W/ ½" CARRIAGE BOLTS 32" o.c. STAGGERED EA SIDE OF WEB
½" FILLER EA SIDE
12/33 FOLDING DR HEAD 39B, 40B, 41B & 42B 3"=1'-0"

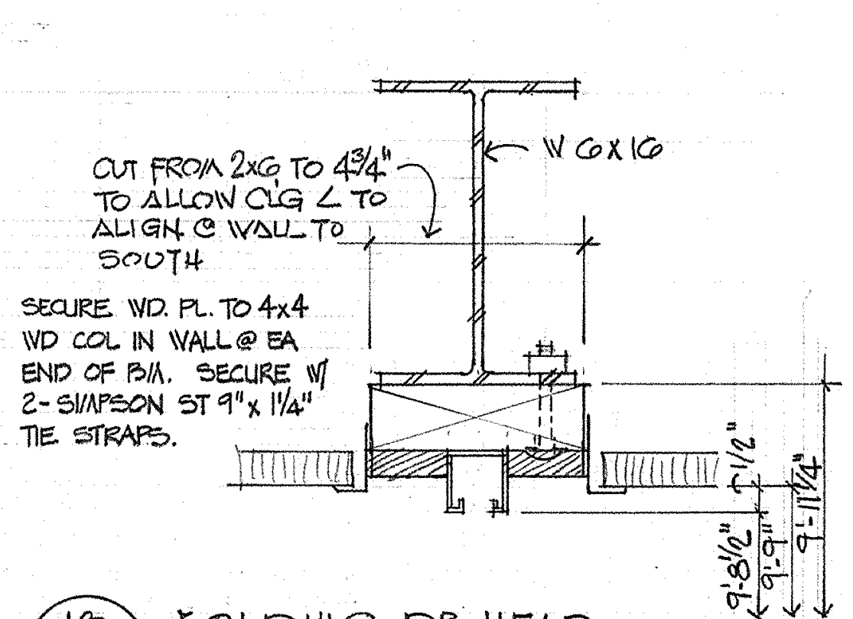
W 6x16
CUT FROM 2x6 TO 4⅝" TO ALLOW CLG & ALIGN @ WALL TO SOUTH
SECURE WD. PL. TO 4x4 WD COL IN WALL @ EA END OF BM. SECURE W/ 2-SIMPSON ST 9 x 1¼" TIE STRAPS.
13/33 FOLDING DR HEAD DR GE 3"=1'-0"

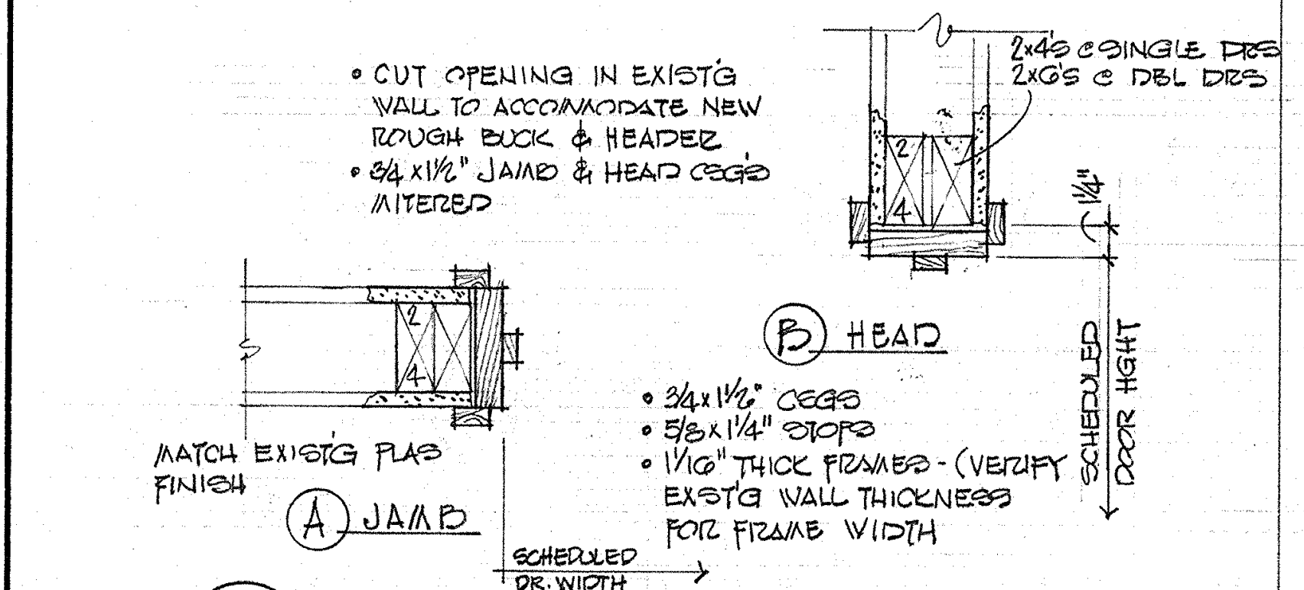
CUT OPENING IN EXST'G WALL TO ACCOMMODATE NEW ROUGH BUCK & HEADER
¾x1½" JAMB & HEAD CEGS MITERED
2x6 @ SINGLE DRS, 2x8 @ DBL DRS
B HEAD
MATCH EXST'G PLAS FINISH
A JAMB
¾x1½" CEGS
⅝x1¼" STOPS
1½" THICK FRAMES ~ (VERIFY EXST'G WALL THICKNESS FOR FRAME WIDTH
SCHEDULED DR WIDTH
SCHEDULED DOOR HEIGHT
6/33 NEW DR & FRAME IN EXST'G WOOD STUD WALL 1½"=1'-0"

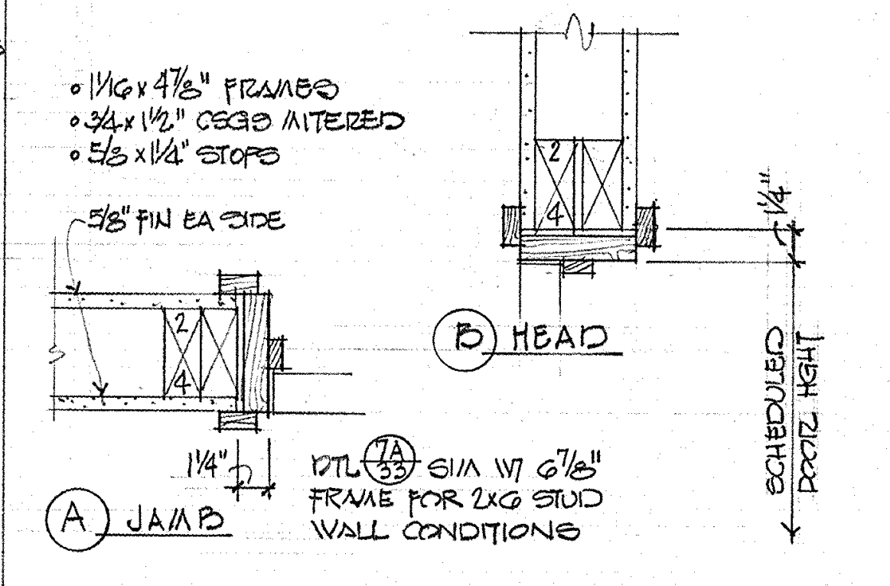
1½x4⅞" FRAMES
¾x1½" CEGS MITERED
⅝x1¼" STOPS
⅝" FIN EA SIDE
A JAMB
B HEAD
DTL SIM W/ 6⅞" FRAME FOR 2x6 STUD WALL CONDITIONS
SCHEDULED DOOR HEIGHT
7/33 NEW WD FRAME IN NEW WD STUD WALL 1½"=1'-0"

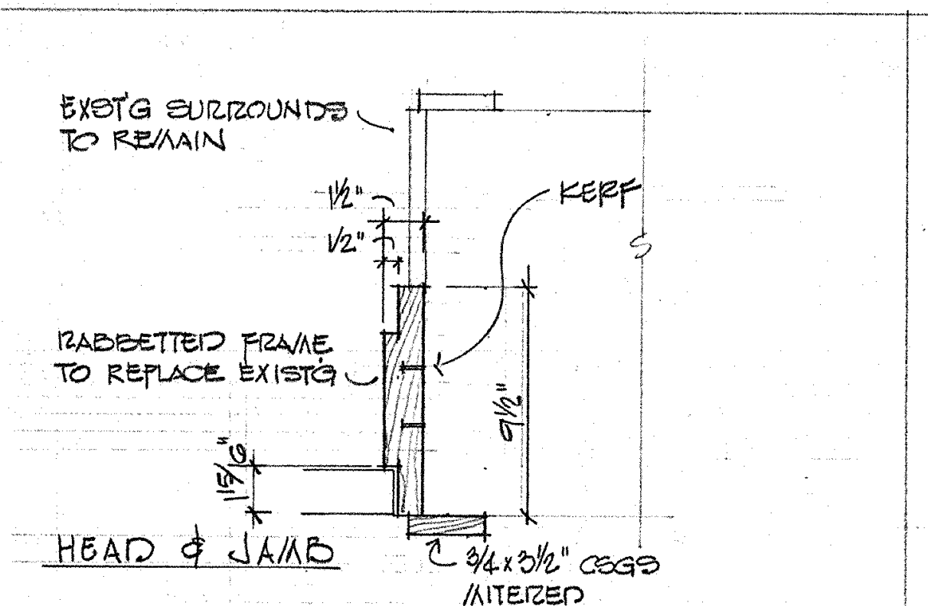
EXST'G SURROUNDS TO REMAIN
KERF
RABBETTED FRAME TO REPLACE EXST'G
HEAD & JAMB
¾x1½" CEGS MITERED
8/33 REPLACE FRAME IN EXST'G OPENING DRS G8C

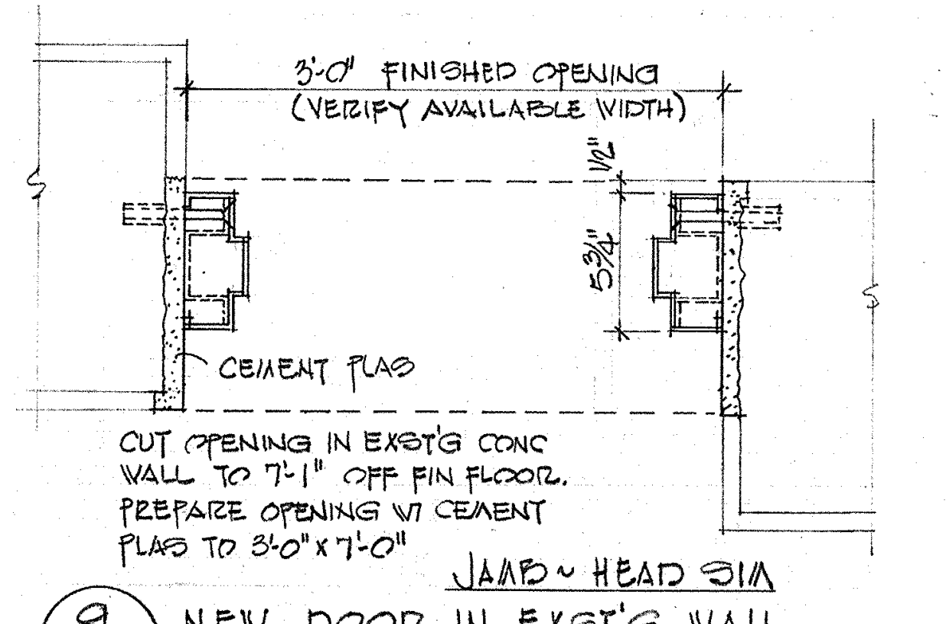
3'-0" FINISHED OPENING (VERIFY AVAILABLE WIDTH)
CEMENT PLAS
CUT OPENING IN EXST'G CONC WALL TO 7'-1" OFF FIN FLOOR. PREPARE OPENING W/ CEMENT PLAS TO 3'-0"x7'-0"
JAMB ~ HEAD SIM
9/33 NEW DOOR IN EXST'G WALL DR 52C 1½"=1'-0"

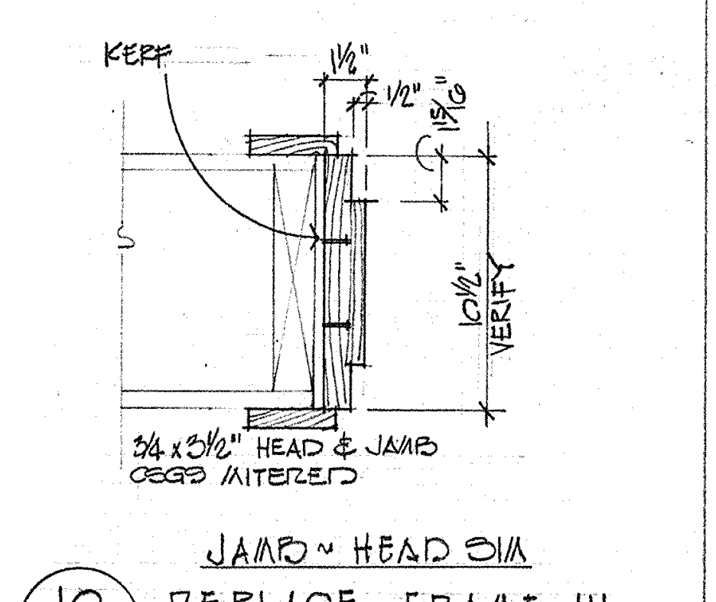
KERF
¾x2½" HEAD & JAMB CEGS MITERED
JAMB ~ HEAD SIM
10/33 REPLACE FRAME IN EXST'G OPENG 1½"=1'-0"

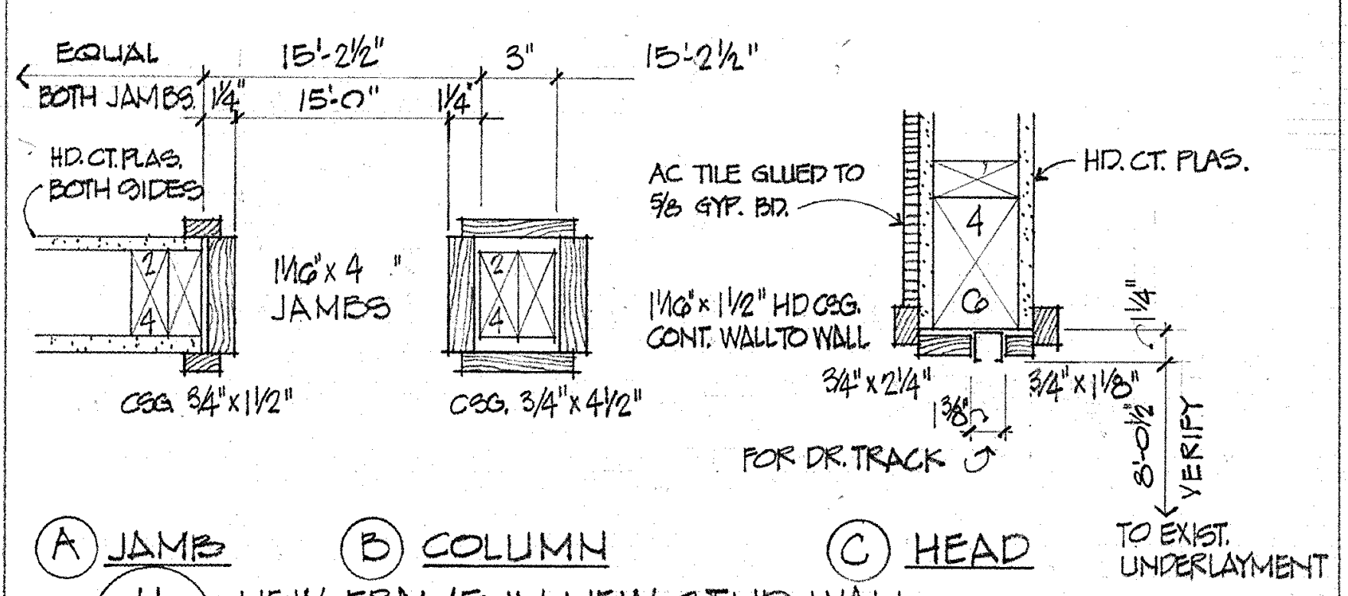
EQUAL BOTH JAMBS
HD. CT. PLAS. BOTH SIDES
1½x4 JAMBS
CEG ¾x1½"
AC TILE GLUED TO ⅝ GYP. BD.
1½x1½" HD CEG CONT WALL TO WALL
HD. CT. PLAS.
FOR DR TRACK
TO EXIST. UNDERLAYMENT
VERIFY
A JAMB
B COLUMN
C HEAD
11/33 NEW FRAME IN NEW STUD WALL FOLDING DOOR 16A & 17A 1½"=1'-0"

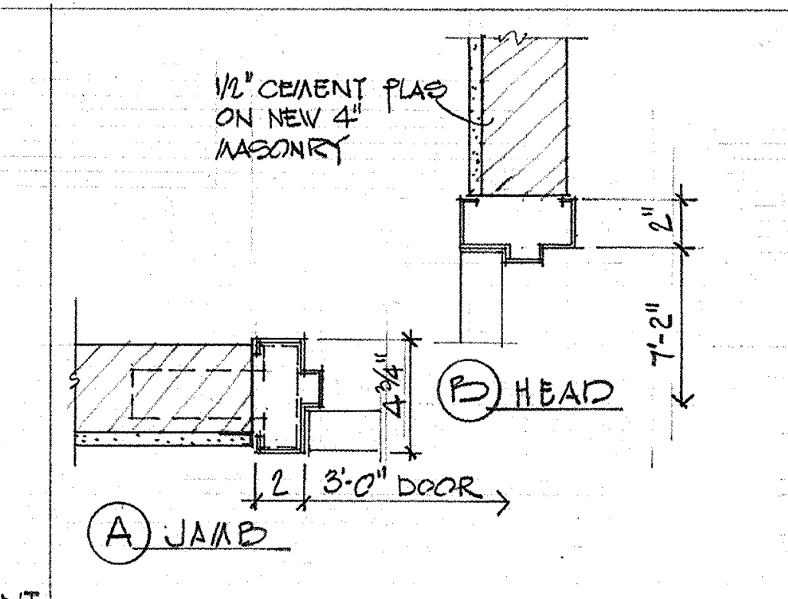
½" CEMENT PLAS ON NEW 4" MASONRY
B HEAD
A JAMB
3'-0" DOOR
14/33 DOOR 35C 1½"=1'-0"

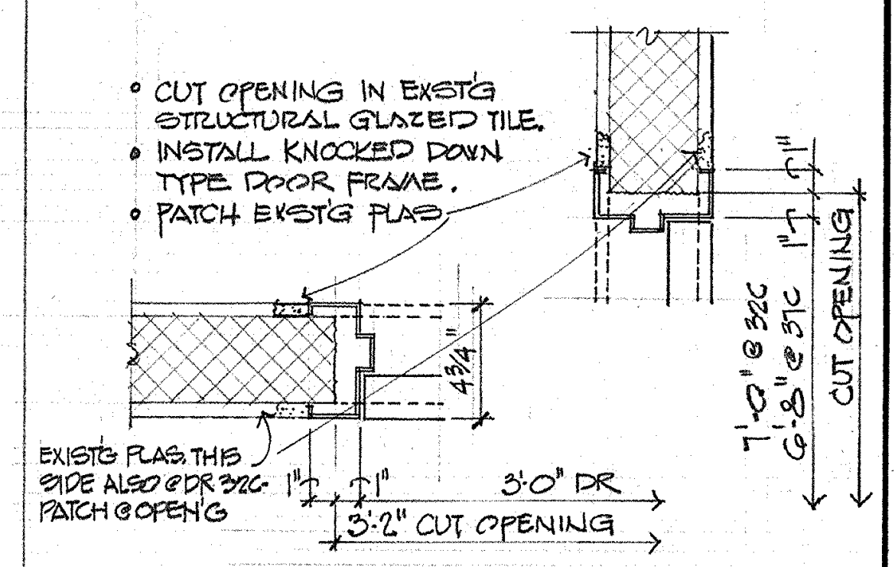
CUT OPENING IN EXST'G STRUCTURAL GLAZED TILE.
INSTALL KNOCKED DOWN TYPE DOOR FRAME.
PATCH EXST'G PLAS
EXST'G PLAS THIS SIDE ALSO FOR 32C. PATCH @ OPENG
3'-0" DR
3'-2" CUT OPENING
CUT OPENING
15/33 DOOR 37C & 32C 1½"=1'-0"

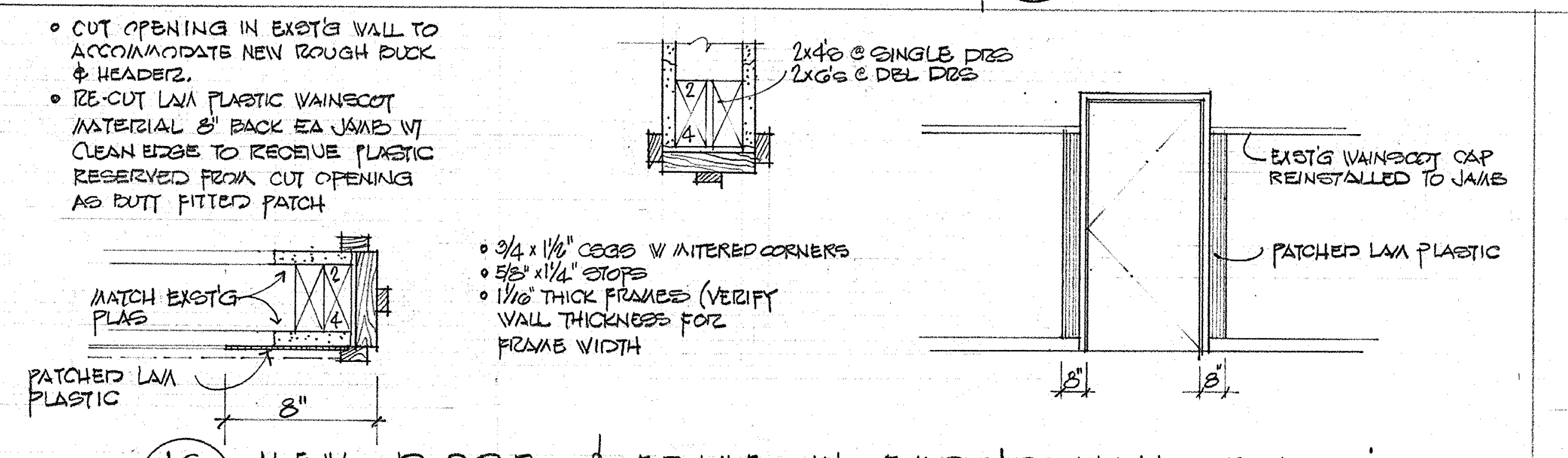
CUT OPENING IN EXST'G WALL TO ACCOMMODATE NEW ROUGH BUCK & HEADER.
RE-CUT LAM PLASTIC WAINSCOT MATERIAL & BACK EA JAMB W/ CLEAN EDGE TO RECEIVE PLASTIC RESERVED FROM CUT OPENING AND BUTT FITTED PATCH
2x6 @ SINGLE DRS, 2x8 @ DBL DRS
MATCH EXST'G PLAS
PATCHED LAM PLASTIC
¾x1½" CEGS W/ MITERED CORNERS
⅝x1¼" STOPS
1½" THICK FRAMES (VERIFY WALL THICKNESS FOR FRAME WIDTH)
EXST'G WAINSCOT CAP REINSTALLED TO JAMB
PATCHED LAM PLASTIC
16/33 NEW DOOR & FRAME IN EXST'G WALL W/ EXST'G LAM PLASTIC WAINSCOT, DOORS: 7B, 35B, 36B 1½"=1'-0"

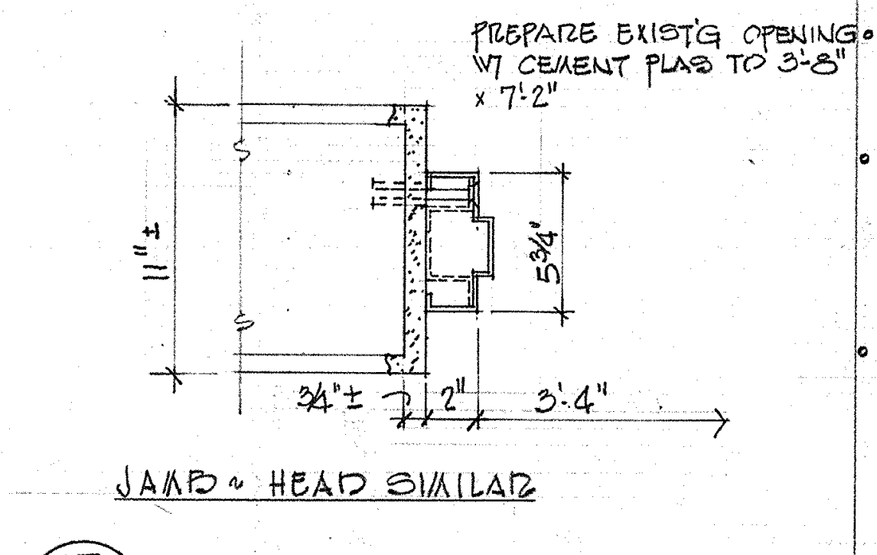
PREPARE EXST'G OPENING W/ CEMENT PLAS TO 3'-3" x 7'-2"
JAMB ~ HEAD SIMILAR
17/33 REPLACE FRAME IN EXST'G OPENING ~ 50C & 65C

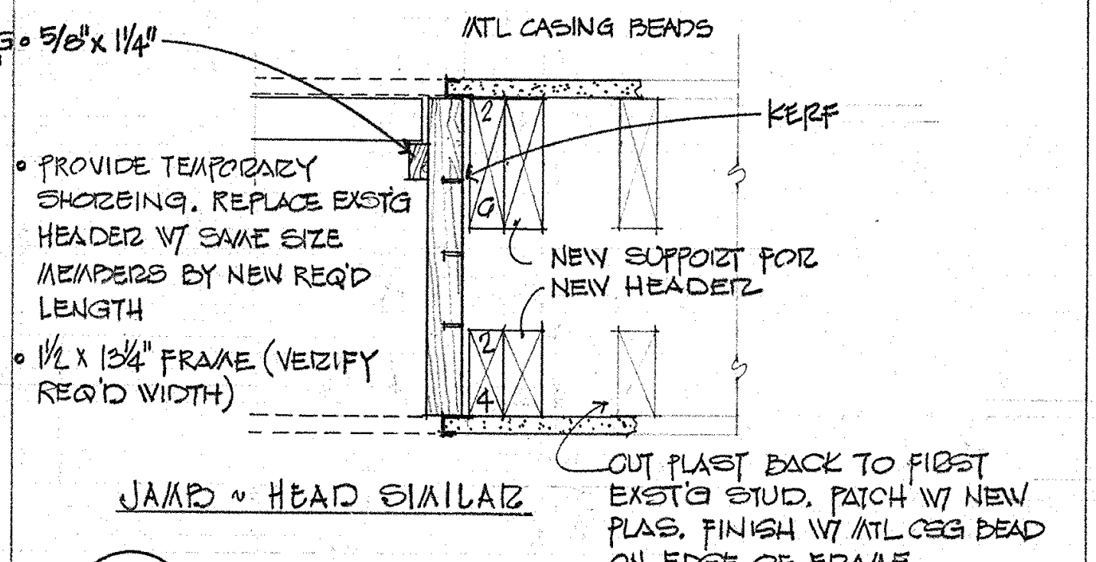
ATL CASING BEADS
KERF
PROVIDE TEMPORARY SHORING, REPLACE EXST'G HEADER W/ SAME SIZE MEMBERS BY NEW REQ'D LENGTH
1½ x 13⅜" FRAME (VERIFY REQ'D WIDTH)
NEW SUPPORT FOR NEW HEADER
CUT PLAS BACK TO FIRST EXST'G STUD. PATCH W/ NEW PLAS, FINISH W/ ATL CSG BEAD ON EDGE OF FRAME.
JAMB ~ HEAD SIMILAR
18/33 CHGE PAIR OF 2'-8" DRS TO PAIR OF 3'-0" DRS DR 1D 1½"=1'-0"

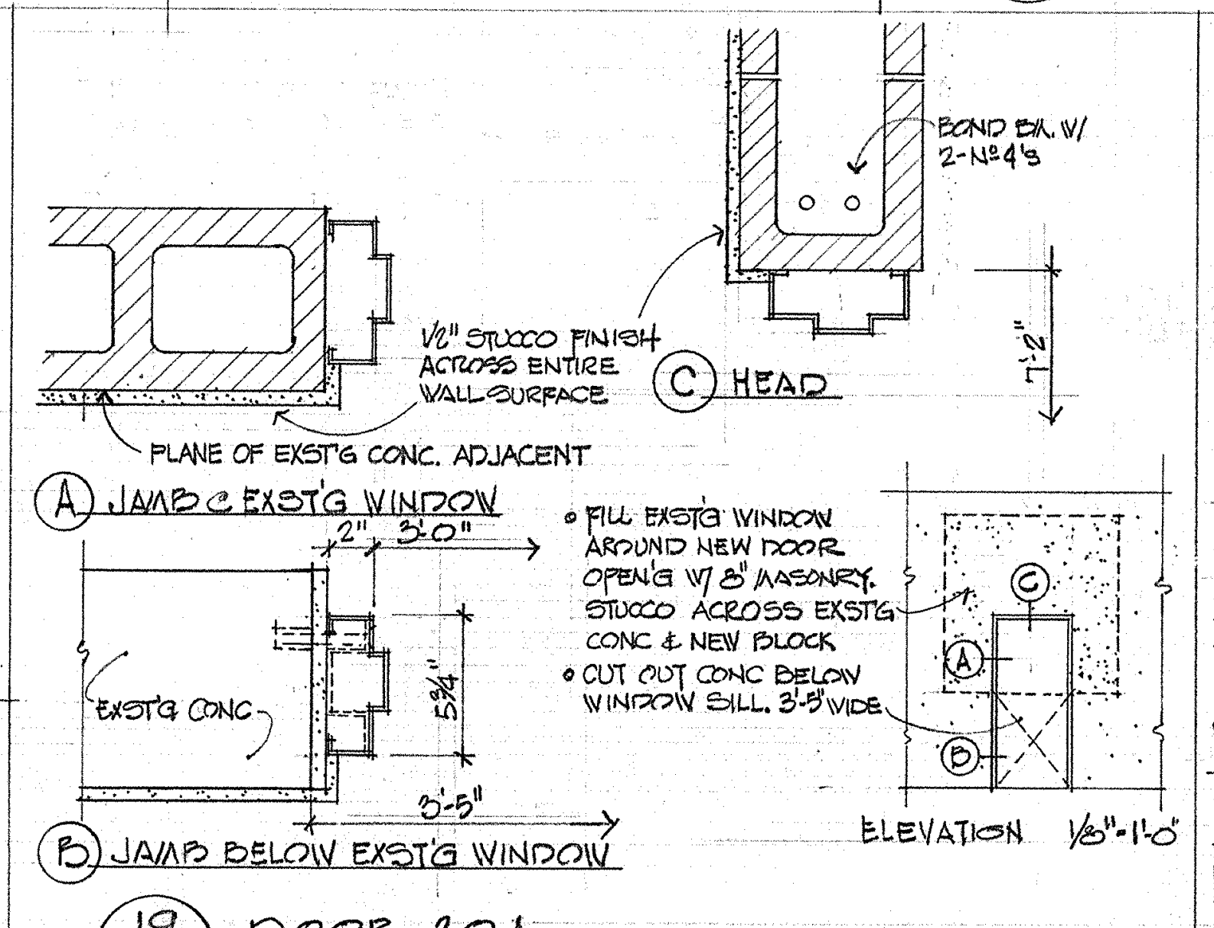
BOND BM W/ 2-#4's
½" STUCCO FINISH ACROSS ENTIRE WALL SURFACE
C HEAD
PLANE OF EXST'G CONC. ADJACENT
A JAMB @ EXST'G WINDOW
EXST'G CONC
FILL EXST'G WINDOW AROUND NEW DOOR OPENG W/ 8" MASONRY. STUCCO ACROSS EXST'G CONC & NEW BLOCK
CUT OUT CONC BELOW WINDOW SILL, 3'-9" WIDE
B JAMB BELOW EXST'G WINDOW
ELEVATION 1/8"=1'-0"
19/33 DOOR 20A 1½"=1'-0"

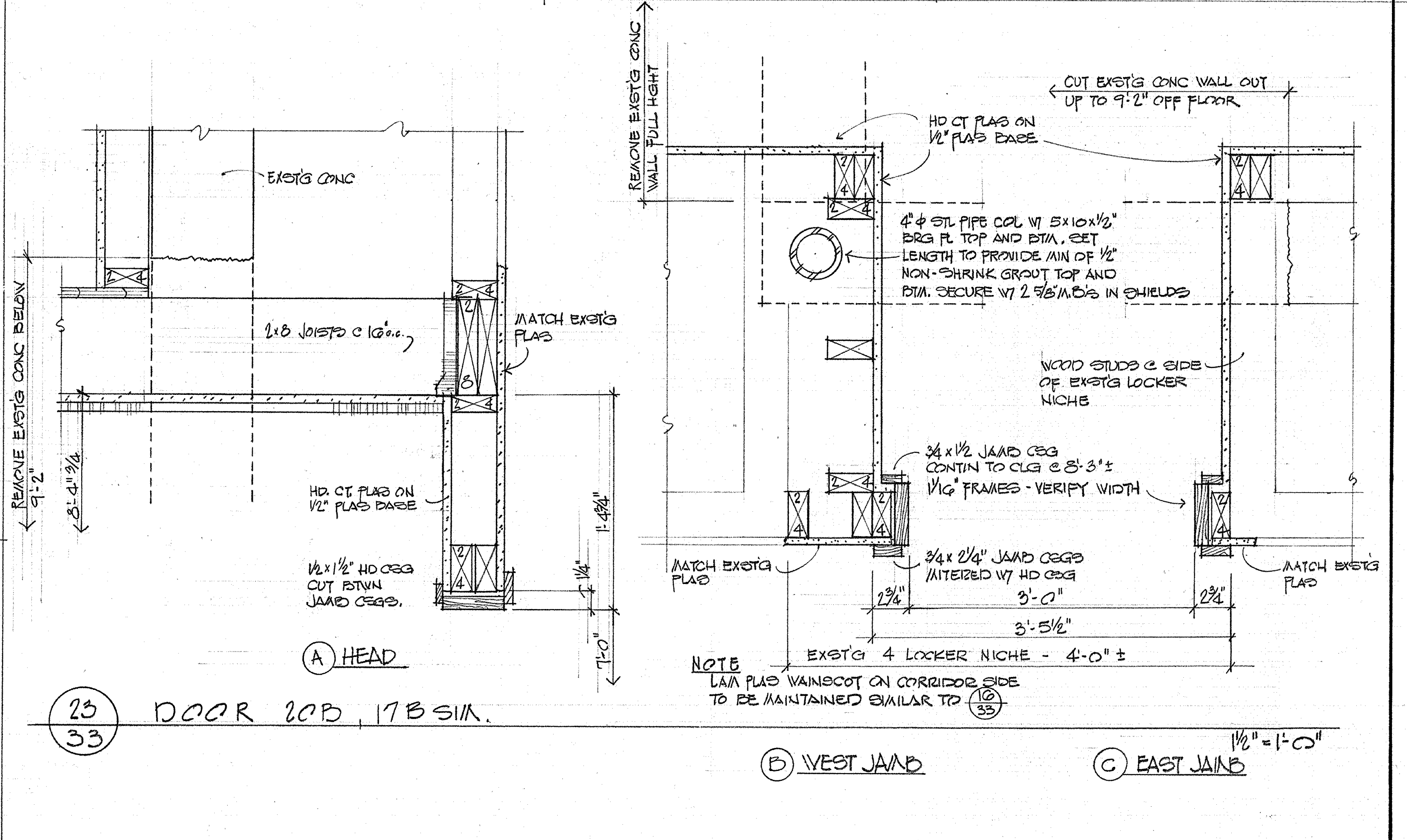
CUT EXST'G CONC WALL OUT UP TO 9'-2" OFF FLOOR
REMOVE EXST'G CONC WALL FULL HEIGHT
EXST'G CONC
2x8 JOISTS @ 16" o.c.
MATCH EXST'G PLAS
HD CT PLAS ON ½" PLAS BASE
HD. CT. PLAS ON ½" PLAS BASE
½x1½" HD CEG CUT BTWN JAMB CEGS
A HEAD
4" φ STL PIPE COL W/ 5x10x⅜" BRG PL TOP AND BTM. SET LENGTH TO PROVIDE MIN OF ½" NON-SHRINK GROUT TOP AND BTM. SECURE W/ 2 ⅝"φ M.B.'s IN SHIELDS
WOOD STUDS @ SIDE OF EXST'G LOCKER NICHE
¾x1½" JAMB CEG CONTIN TO CLG @ 8'-3"±
1½" FRAMES ~ VERIFY WIDTH
¾x2¼" JAMB CEGS MITERED W/ HD CEG
MATCH EXST'G PLAS
3'-0"
3'-5½"
EXST'G 4 LOCKER NICHE ~ 4'-0"±
NOTE: LAM PLAS WAINSCOT ON CORRIDOR SIDE TO BE MAINTAINED SIMILAR TO 16/33
B WEST JAMB
C EAST JAMB
23/33 DOOR 20B, 17B SIM. 1½"=1'-0"

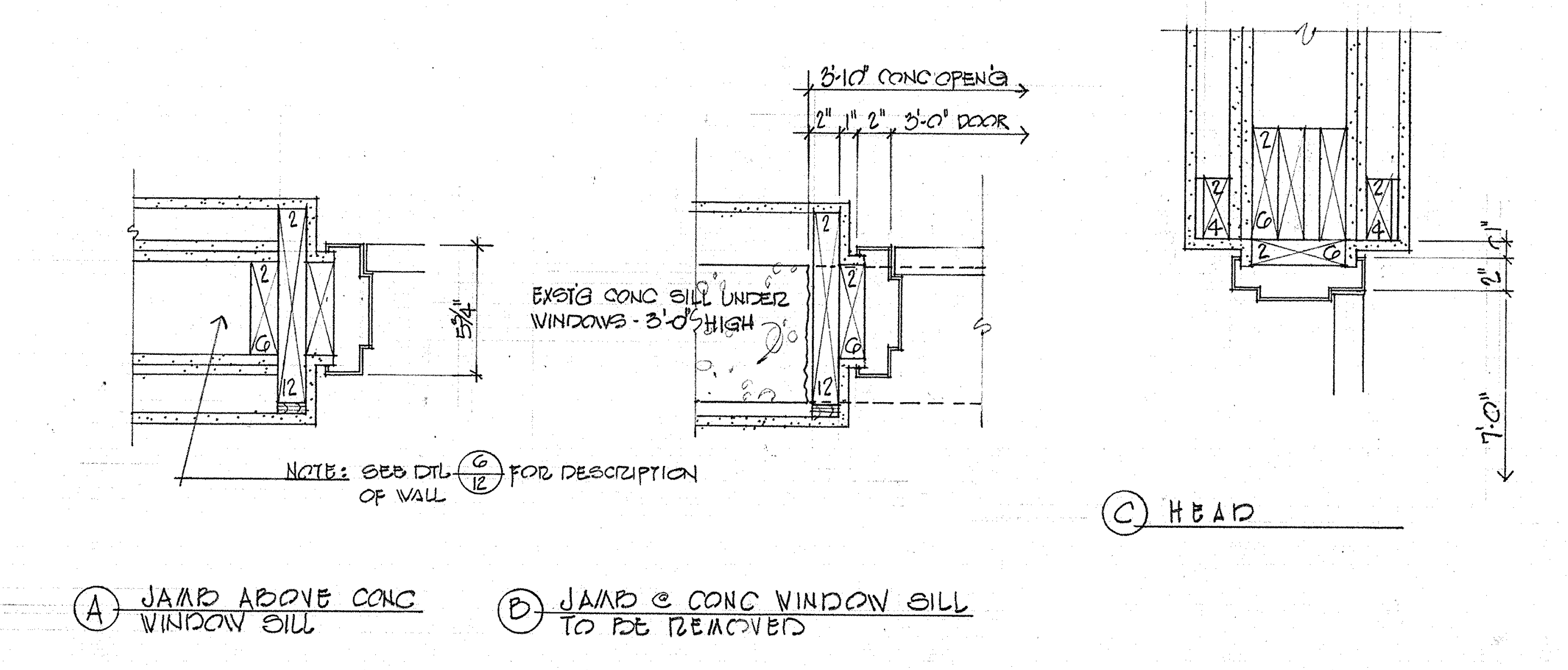
3'-10" CONC OPENG
3'-0" DOOR
EXST'G CONC SILL UNDER WINDOWS ~ 3'-0" HIGH
NOTE: SEE DTL C FOR DESCRIPTION OF WALL
C HEAD
A JAMB ABOVE CONC WINDOW SILL
B JAMB @ CONC WINDOW SILL TO BE REMOVED
20/33 DOOR 23B 1½"=1'-0"

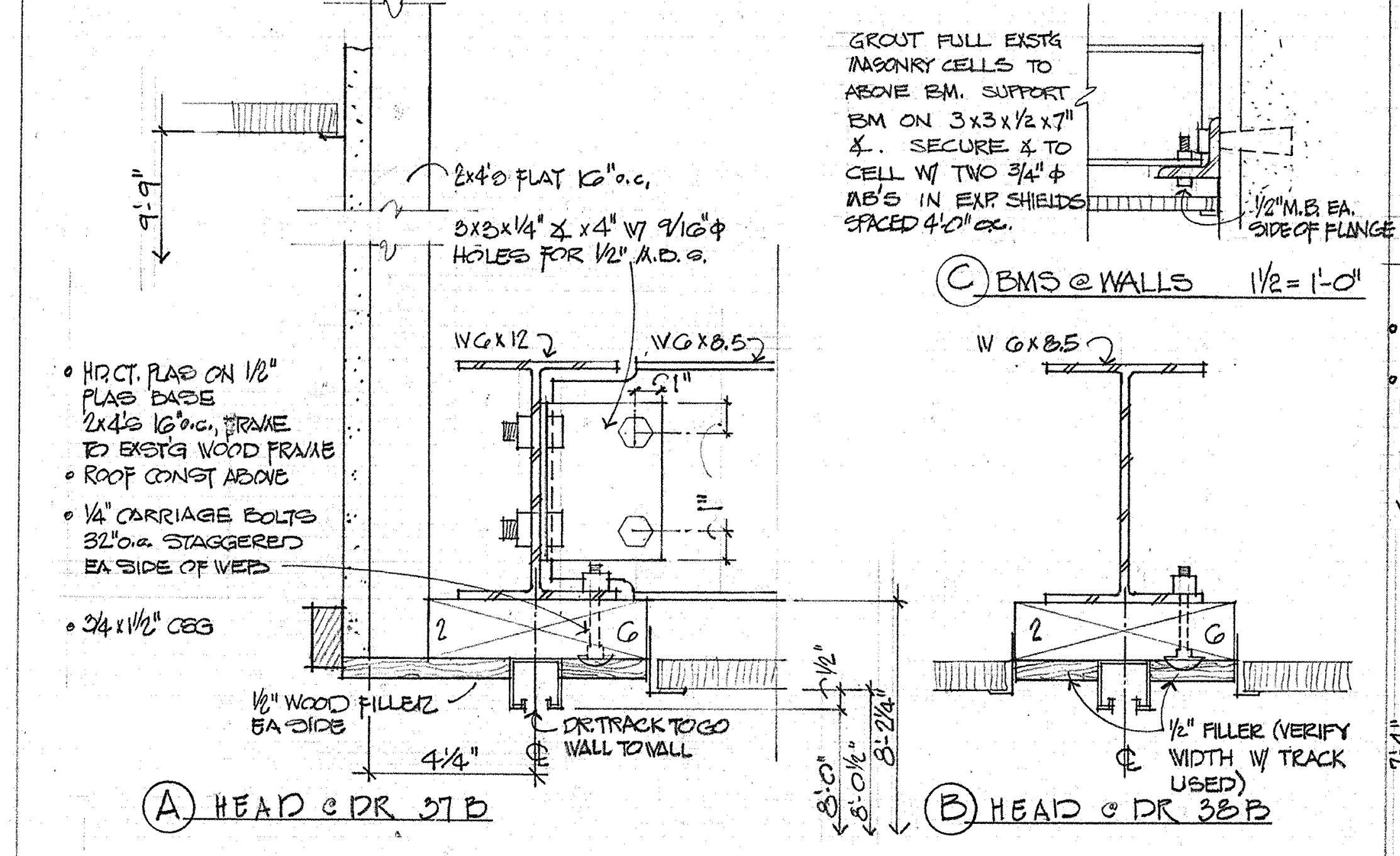
2x6 PLAT 12" o.c.
3½x3½x¼" x 4" W/ 9/16"φ HOLES FOR ½" A.B.'S
W 6x12
W 6x8.5
HD.CT. PLAS ON ½" PLAS BASE
2x4's 16" o.c., FRAME TO EXST'G WOOD FRAME
ROOF CONST ABOVE
½" CARRIAGE BOLTS 32" o.c. STAGGERED EA SIDE OF WEB
¾x1½" CEG
½" WOOD FILLER EA SIDE
DR TRACK TO GO WALL TO WALL
GROUT FULL EXST'G MASONRY CELLS TO ABOVE BM. SUPPORT BM ON 3x3x¼"x7" ∠ SECURE TO CELL W/ TWO ⅝"φ MB'S IN EXP SHIELDS
½" M.B. EA SIDE OF FLANGE
C BMS @ WALLS
½" FILLER (VERIFY WIDTH W/ TRACK USED)
A HEAD @ DR 31B
B HEAD @ DR 38B
21/33 FOLDING DR DTLS ~ 31B & 38B 3"=1'-0"

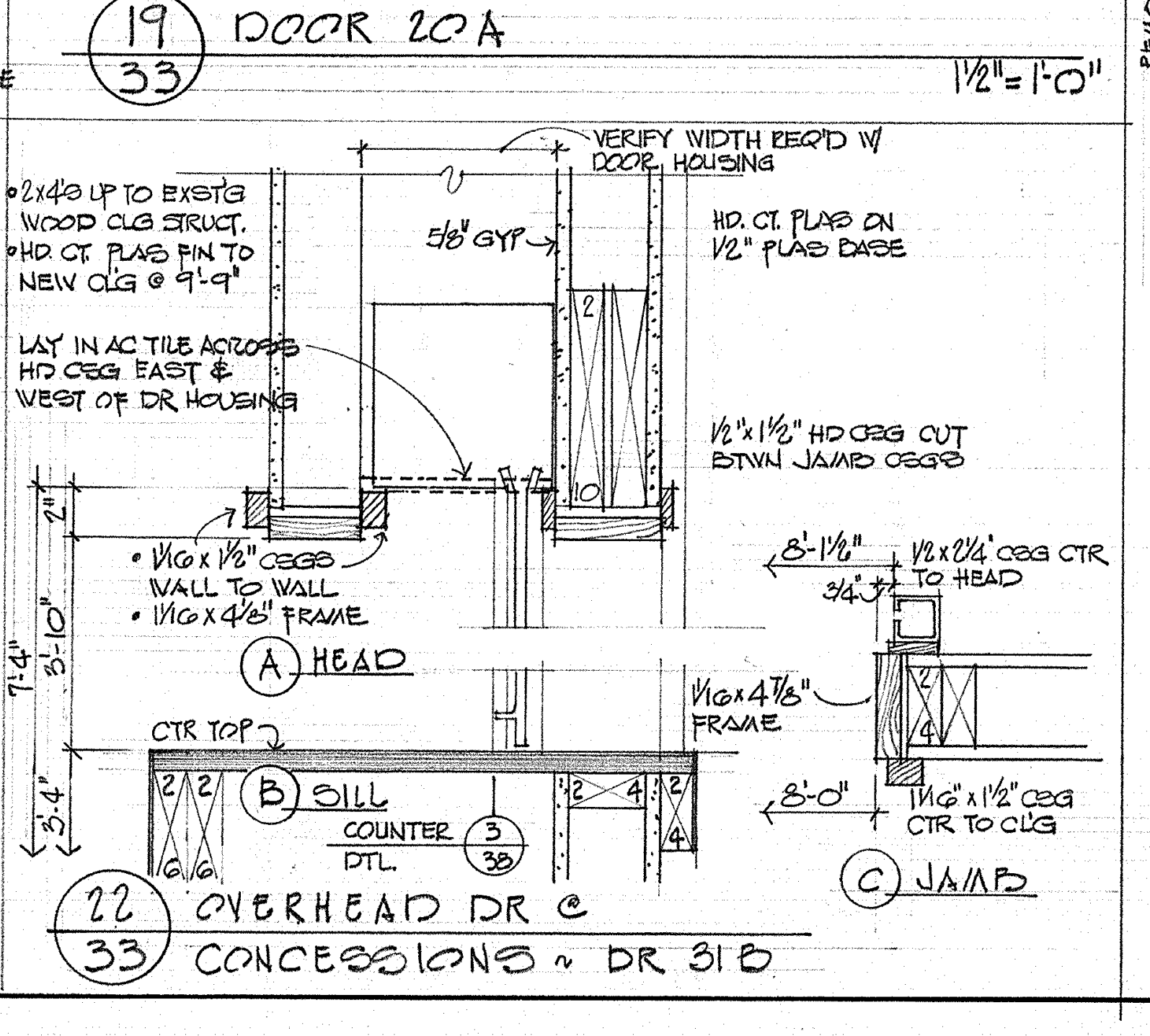
VERIFY WIDTH REQ'D W/ DOOR HOUSING
2x4's UP TO EXST'G WOOD CLG STRUCT. HD CT PLAS FIN TO NEW CLG @ 9'-9"
HD. CT. PLAS ON ½" PLAS BASE
⅝" GYP
LAY IN AC TILE ACROSS EAST & WEST OF DR HOUSING
½x1½" HD CEG CUT BTWN JAMB CEGS
¾x1½" CEGS WALL TO WALL
1½x4⅞" FRAME
A HEAD
¾x2½" CEGS CTR TO HEAD
1½x4⅞" FRAME
CTR TOP
B SILL
COUNTER DTL.
1½x1½" CEG CTR TO CLG
C JAMB
22/33 OVERHEAD DR @ CONCESSIONS ~ DR 31B

INTERIOR DOOR DETAILS

SWEET HOME HIGH SCHOOL
ADDITIONS AND ALTERATIONS 1974
DISTRICT 55 LINN COUNTY, OREGON

ARCHITECTS
HAMLIN, MARTIN,
SCHULTZ & GEYER
AIA
159 W. 12TH EUGENE, OREGON 97401

A
33
JOB NO.

CLARE K. HAMLIN
Clark Hamlin

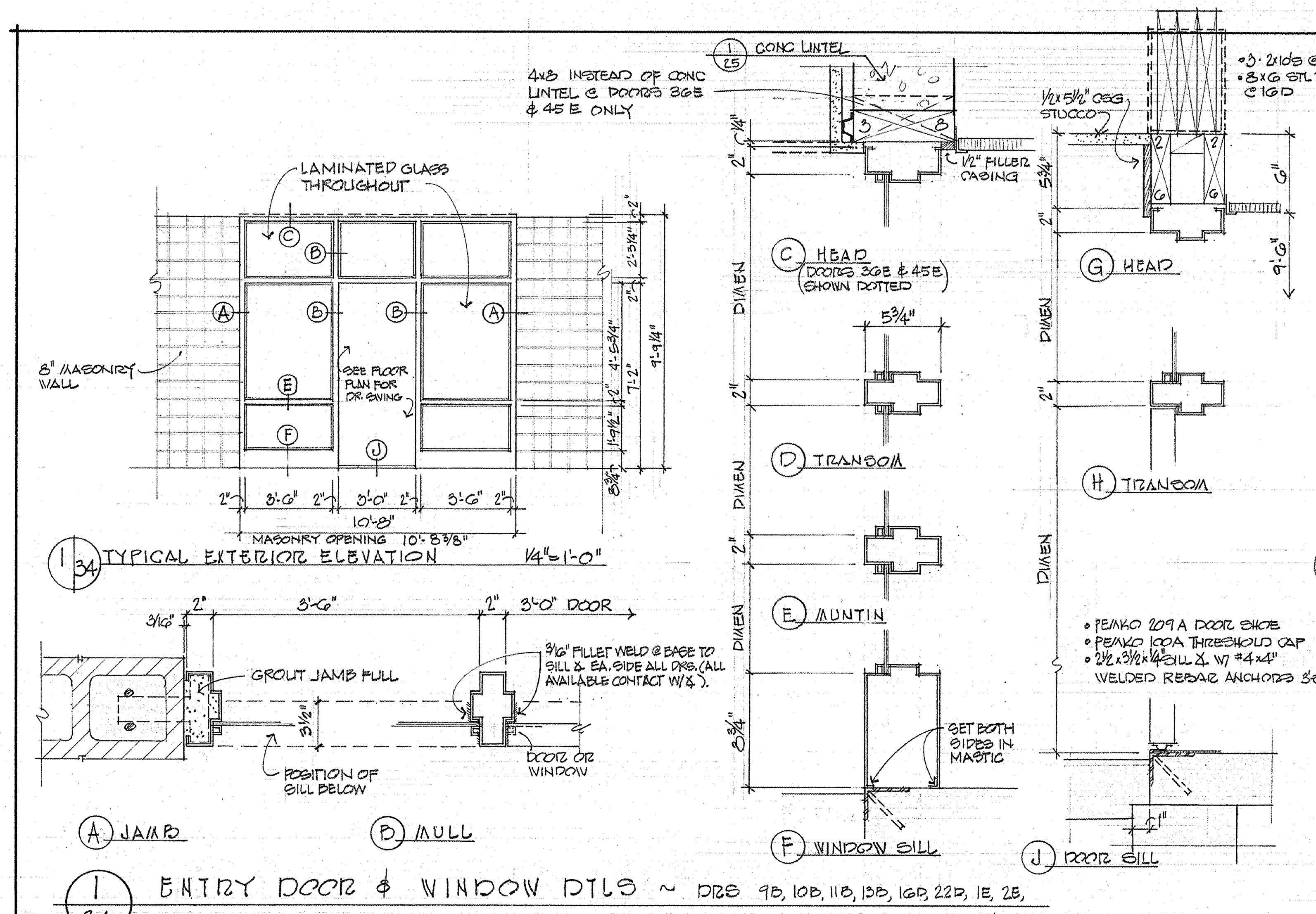
4x8 INSTEAD OF CONC LINTEL @ DOORS 36E & 45E ONLY
1/25 CONC LINTEL
LAMINATED GLASS THROUGHOUT
8" MASONRY WALL
SEE FLOOR PLAN FOR DR. SWING
3'-6" 3'-0" 3'-6" 10'-8"
MASONRY OPENING 10'-8 3/8"
1/34 TYPICAL EXTERIOR ELEVATION 1/4"=1'-0"
1/2" FILLER CASING
C HEAD (DOORS 36E & 45E SHOWN DOTTED)
D TRANSOM
E MUNTIN
F WINDOW SILL
SET BOTH SIDES IN MASTIC
• 3-2x10's @ 22D
• 8x6 STL TUBE @ 16D
1/2x5 1/2" CSG
STUCCO
G HEAD
H TRANSOM
J DOOR SILL
• PEMKO 209 A DOOR SHOE
• PEMKO 100A THRESHOLD CAP
• 2 1/2x3 1/2x1/4" SILL ∡ W/ #4x4" WELDED REBAR ANCHORS 3'0" o.c.
3'-6" 3'-0" DOOR
GROUT JAMB FULL
3/16" FILLET WELD @ BASE TO SILL ∡ EA. SIDE ALL DRS. (ALL AVAILABLE CONTACT W/∡).
POSITION OF SILL BELOW
DOOR OR WINDOW
A JAMB
B MULL
DIMEN

1/34 ENTRY DOOR & WINDOW DTLS ~ DRS 9B, 10B, 11B, 13B, 16D, 22D, 1E, 2E, 3E, 4E, 7E, 16E, 20E, 22E, 24E, 25E, 26E, 27E, 35E, 36E, 45E, 58E, 59E, 60E. 1 1/2"=1'-0"

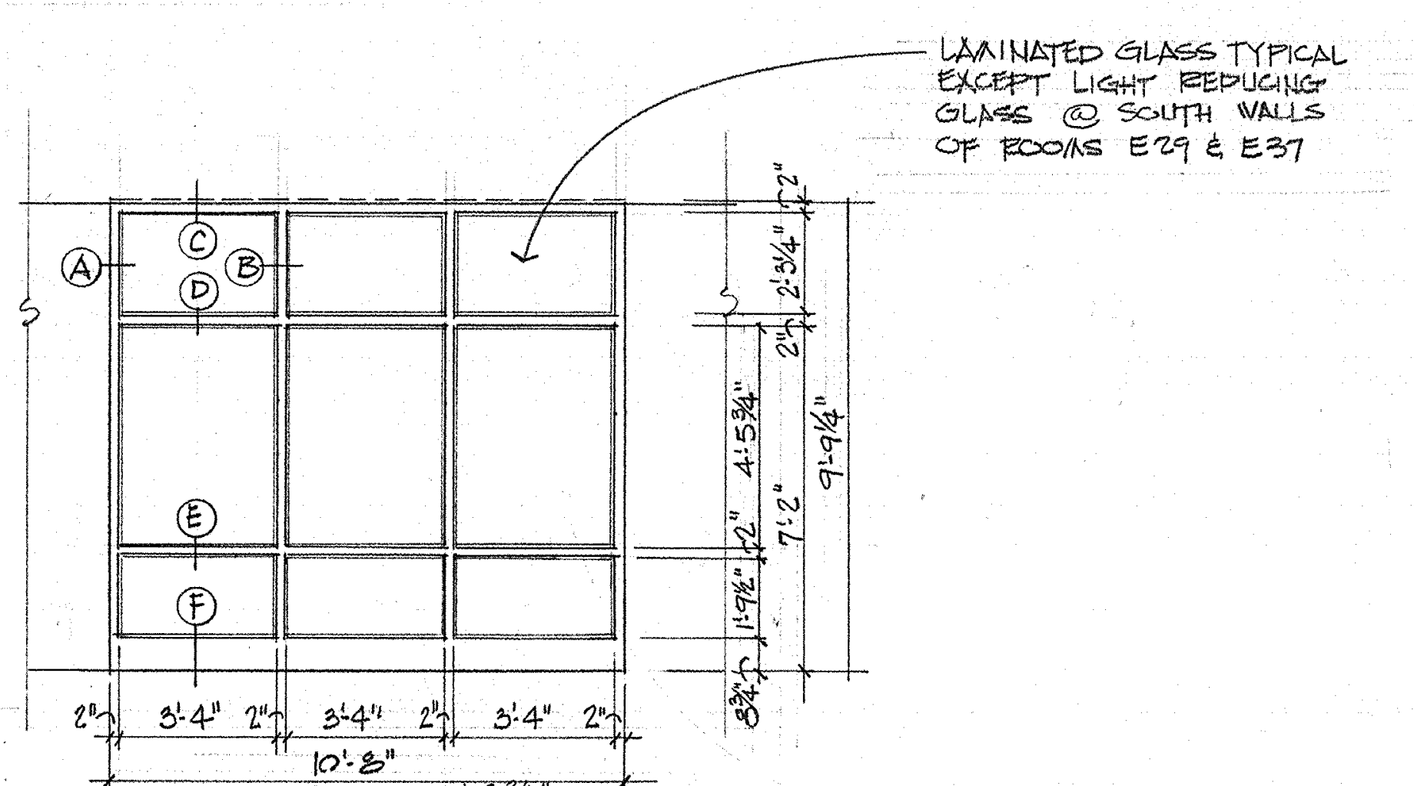
LAMINATED GLASS TYPICAL EXCEPT LIGHT REDUCING GLASS @ SOUTH WALLS OF ROOMS E29 & E37
3'-4" 3'-4" 3'-4" 10'-8"
MASONRY OPENING 10'-8 3/8"

2/34 EXTERIOR ELEV WINDOW UNIT 1/4"=1'-0"

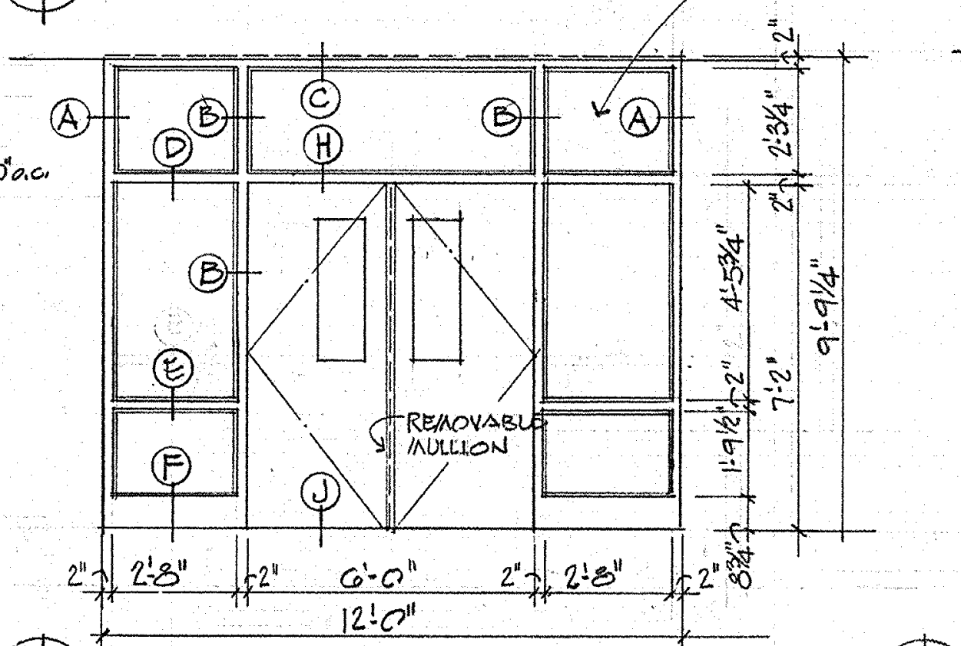
REMOVABLE MULLION
2'-8" 6'-0" 2'-8" 12'-0"

3/34 EXTERIOR ELEV DRS 36E & 45E 1/4"=1'-0"

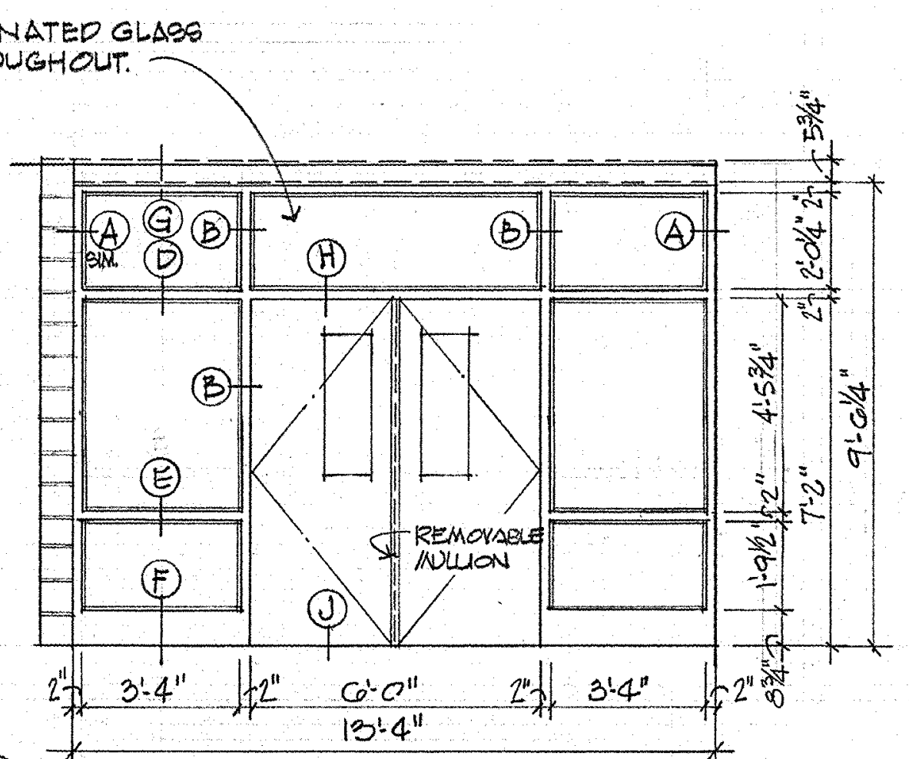
LAMINATED GLASS THROUGHOUT.
REMOVABLE MULLION
3'-4" 6'-0" 3'-4" 13'-4"

4/34 EXTERIOR ELEV 22D ~ 16D SIM 1/4"=1'-0"

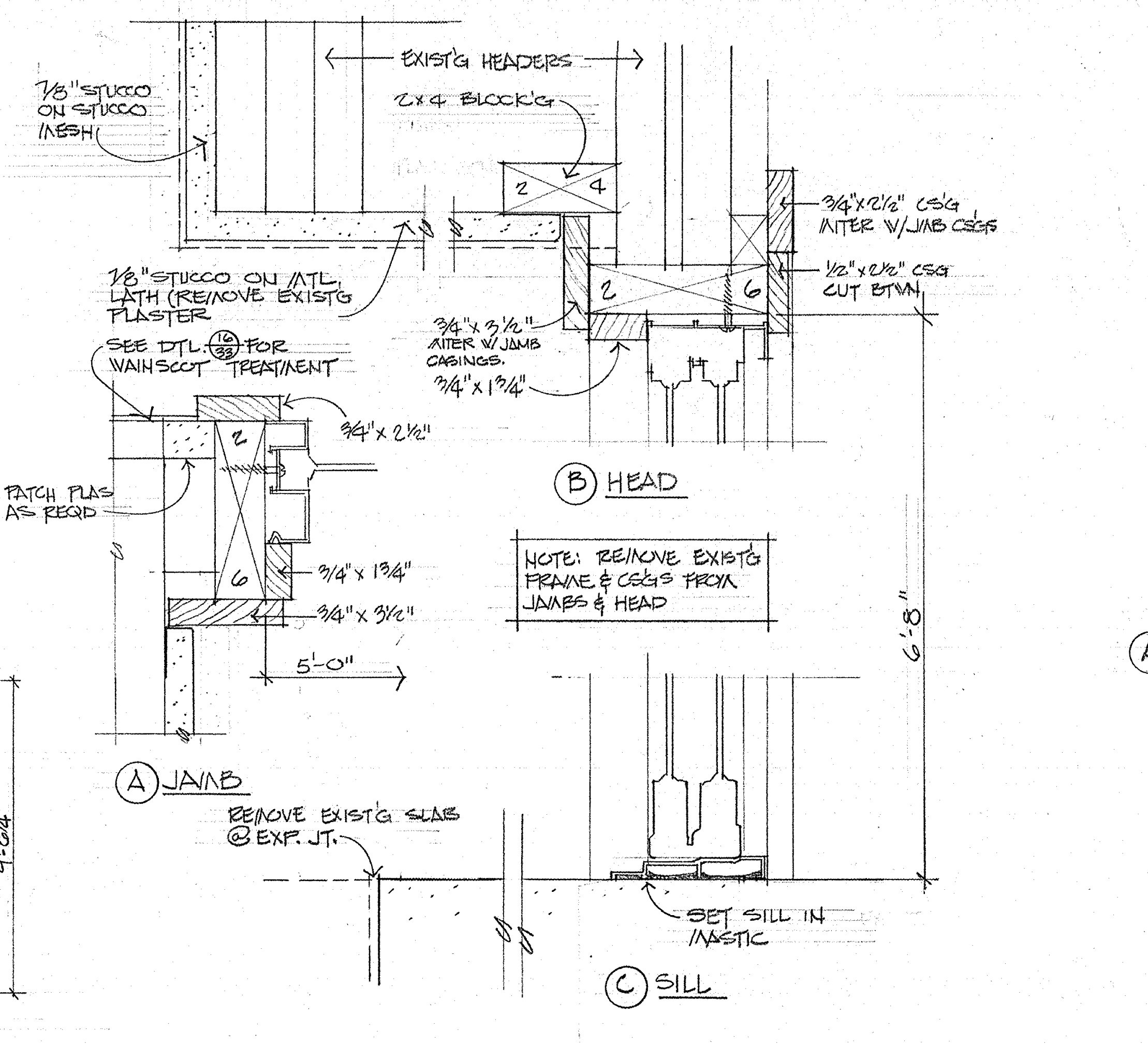
7/8" STUCCO ON STUCCO MESH
EXIST'G HEADERS
2x4 BLOCK'G
3/4"x2 1/2" CSG MITER W/JAMB CSGS
1/2"x2 1/2" CSG CUT BTWN
7/8" STUCCO ON MTL. LATH (REMOVE EXIST'G PLASTER
SEE DTL. 16/33 FOR WAINSCOT TREATMENT
3/4"x3 1/2" MITER W/ JAMB CASINGS.
3/4"x1 3/4"
3/4"x2 1/2"
PATCH PLAS AS REQD
3/4"x3 1/2"
5'-0"
B HEAD
NOTE: REMOVE EXIST'G FRAME & CSG'S FROM JAMBS & HEAD
6'-8"
A JAMB
REMOVE EXIST'G SLAB @ EXP. JT.
SET SILL IN MASTIC
C SILL

2/34 DOOR 43B ALUM SLIDING DOOR 3"=1'-0"

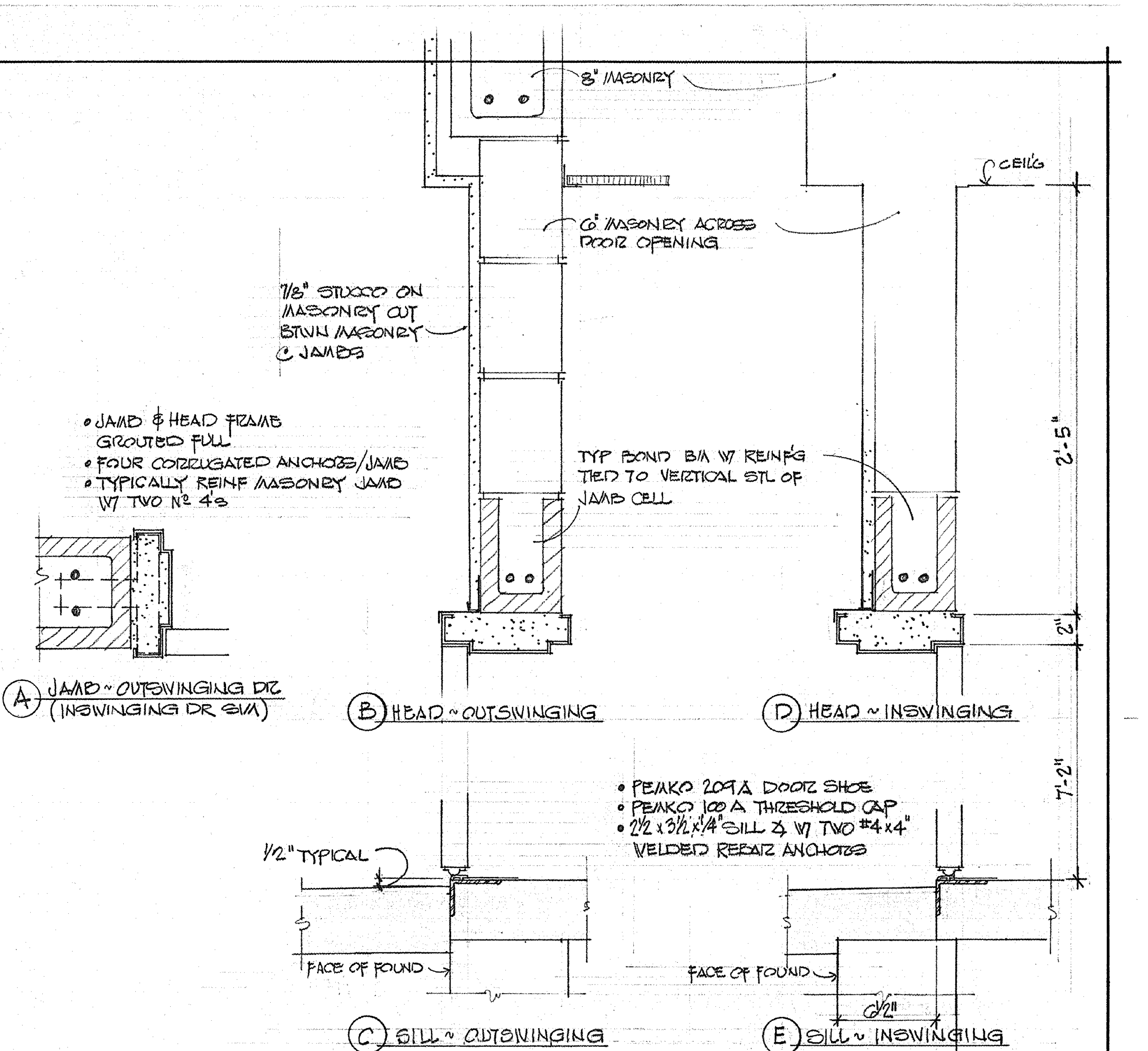
8" MASONRY
CEIL'G
6" MASONRY ACROSS DOOR OPENING
7/8" STUCCO ON MASONRY OUT BTWN MASONRY @ JAMBS
• JAMB & HEAD FRAME GROUTED FULL
• FOUR CORRUGATED ANCHORS/JAMB
• TYPICALLY REINF MASONRY JAMB W/ TWO No 4's
TYP BOND BM W/ REINF'G TIED TO VERTICAL STL OF JAMB CELL
2'-5"
A JAMB ~ OUTSWINGING DR (INSWINGING DR SIM)
B HEAD ~ OUTSWINGING
D HEAD ~ INSWINGING
• PEMKO 209A DOOR SHOE
• PEMKO 100 A THRESHOLD CAP
• 2 1/2x3 1/2x1/4" SILL ∡ W/ TWO #4x4" WELDED REBAR ANCHORS
1/2" TYPICAL
7'-2"
FACE OF FOUND
C SILL ~ OUTSWINGING
E SILL ~ INSWINGING

3/34 EXTERIOR DOORS IN MASONRY WALLS @ NEW CLASSROOM BUILDINGS 1 1/2"=1'-0"

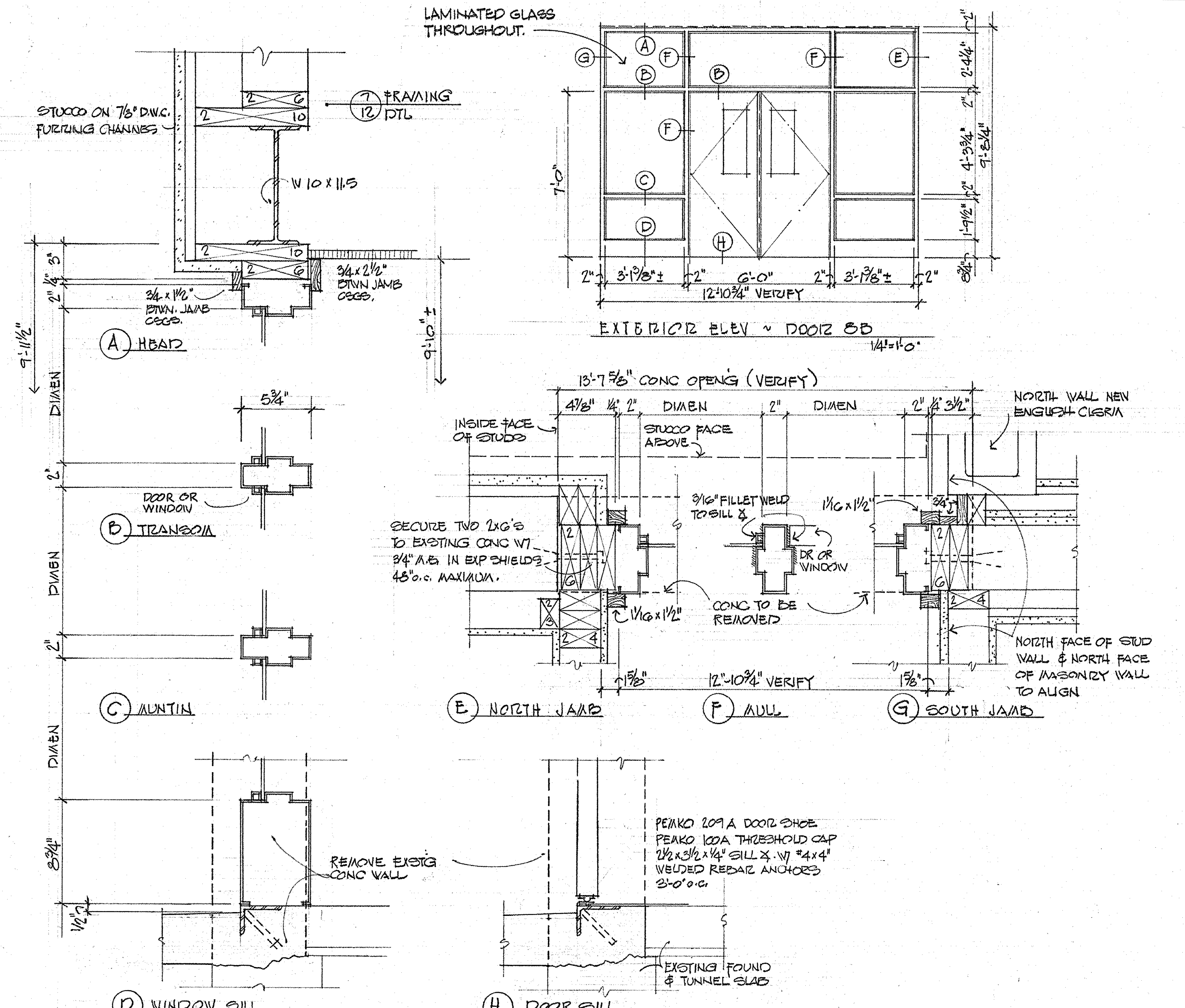
STUCCO ON 7/8" D.W.C. FURRING CHANNELS
7/12 FRAMING DTL
W10x11.5
3/4x2 1/2" BTWN JAMB CSGS.
3/4x1 1/2" BTWN. JAMB CSGS.
9'-11 1/2"
9'-10"±
A HEAD
LAMINATED GLASS THROUGHOUT.
7'-0"
3'-1 7/8"± 6'-0" 3'-1 7/8"± 12'-10 3/4" VERIFY
EXTERIOR ELEV ~ DOOR 8B 1/4"=1'-0"
DOOR OR WINDOW
B TRANSOM
C MUNTIN
13'-7 5/8" CONC OPEN'G (VERIFY)
INSIDE FACE OF STUDS
STUCCO FACE ABOVE
NORTH WALL NEW ENGLISH CLGRM
SECURE TWO 2x6'S TO EXISTING CONC W/ 3/4" M.B. IN EXP SHIELDS 48" o.c. MAXIMUM.
3/16" FILLET WELD TO SILL ∡
1 1/16x1 1/2"
DR OR WINDOW
CONC TO BE REMOVED
NORTH FACE OF STUD WALL & NORTH FACE OF MASONRY WALL TO ALIGN
12'-10 3/4" VERIFY
E NORTH JAMB
F MULL
G SOUTH JAMB
REMOVE EXIST'G CONC WALL
PEMKO 209 A DOOR SHOE
PEMKO 100A THRESHOLD CAP
2 1/2x3 1/2x1/4" SILL ∡ W/ #4x4" WELDED REBAR ANCHORS 3'-0" o.c.
EXISTING FOUND & TUNNEL SLAB
D WINDOW SILL
H DOOR SILL

4/34 ENTRY DOOR & WINDOW DTLS ~ DR 8B 1 1/2"=1'-0"

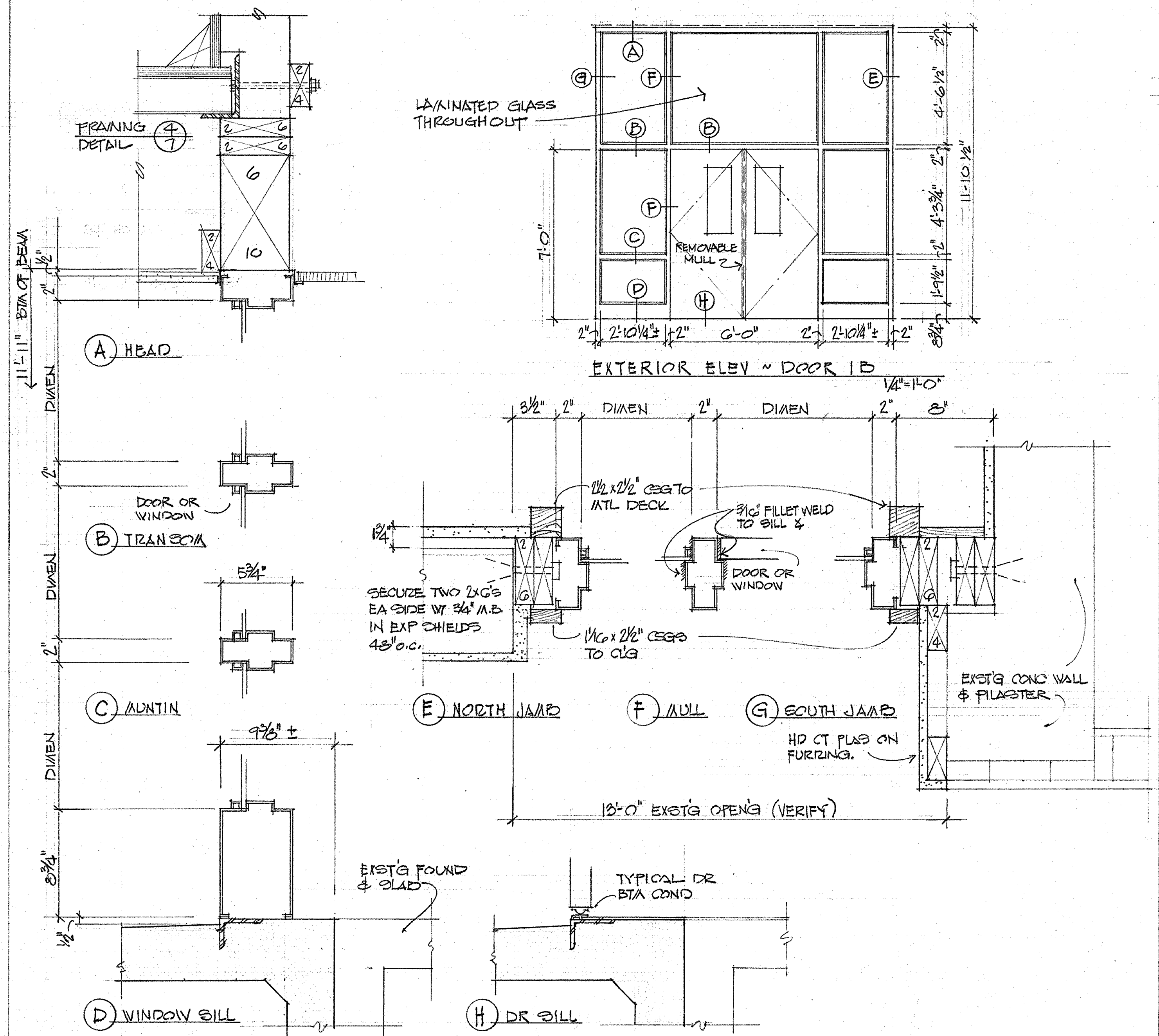
FRAMING DETAIL 4/7
11'-11" BTM OF BEAM
A HEAD
LAMINATED GLASS THROUGHOUT
REMOVABLE MULL
2'-10 1/4"± 6'-0" 2'-10 1/4"±
EXTERIOR ELEV ~ DOOR 1B 1/4"=1'-0"
DOOR OR WINDOW
B TRANSOM
C MUNTIN
2 1/2x2 1/2" CSG TO MTL DECK
3/16" FILLET WELD TO SILL ∡
DOOR OR WINDOW
SECURE TWO 2x6'S EA SIDE W/ 3/4" M.B. IN EXP SHIELDS 48" o.c.
1 1/16x2 1/2" CSGS TO CLG
E NORTH JAMB
F MULL
G SOUTH JAMB
EXIST'G CONC WALL & PILASTER
HD CT PLAS ON FURRING.
13'-0" EXIST'G OPEN'G (VERIFY)
EXIST'G FOUND & SLAB
TYPICAL DR BTM COND
D WINDOW SILL
H DR SILL

5/34 ENTRY DOOR & WINDOW DTLS ~ DR 1B 1 1/2"=1'-0"

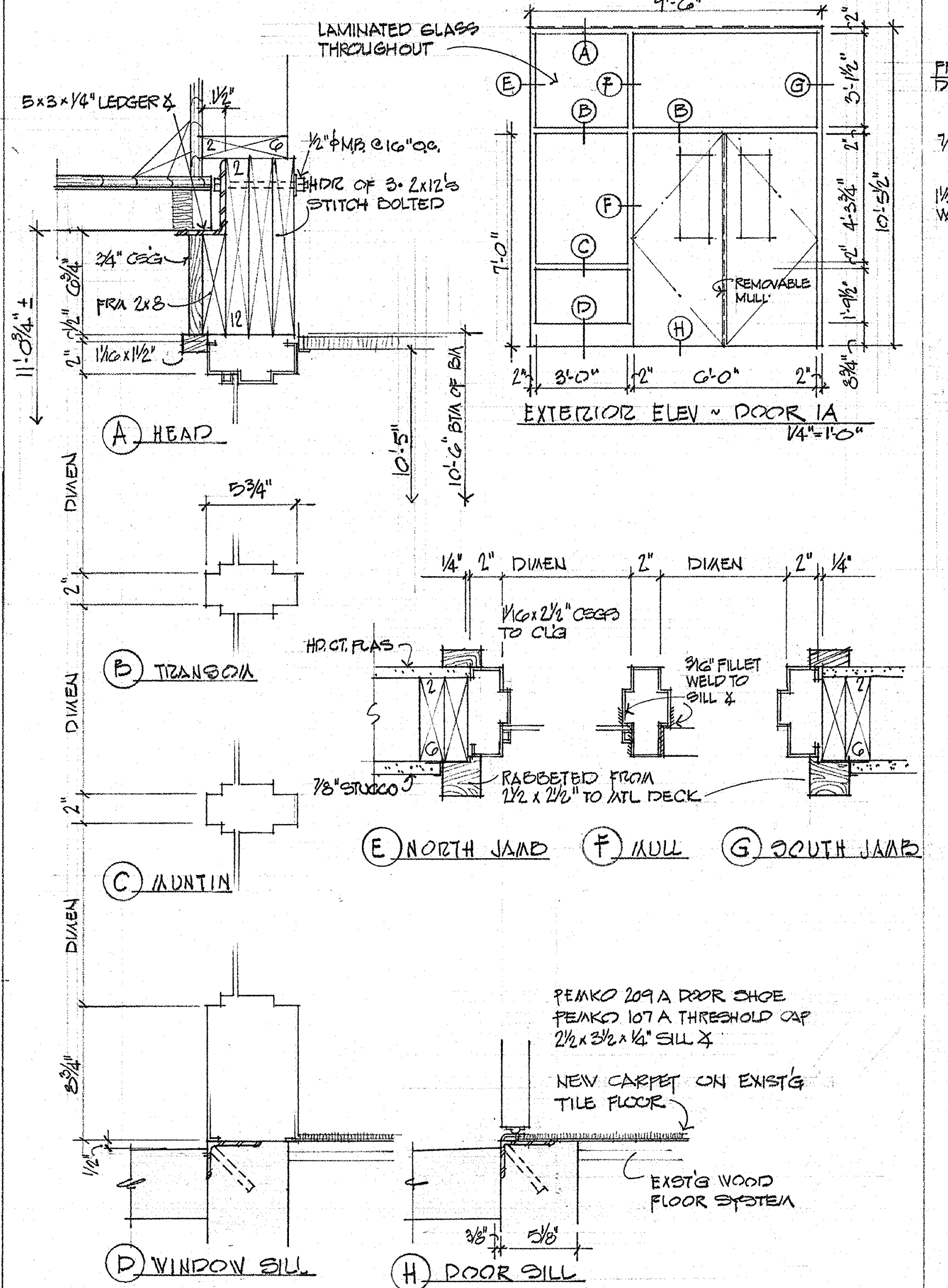
LAMINATED GLASS THROUGHOUT
5x3x1/4" LEDGER ∡
1/2"ϕ M.B. @ 16" o.c.
HDR OF 3-2x12'S STITCH BOLTED
3/4" CSG
FRM 2x8
1 1/16x1 1/2"
11'-0 3/4"±
10'-5"
10'-6" BTM OF BM
A HEAD
9'-6"
REMOVABLE MULL
3'-0" 6'-0"
EXTERIOR ELEV ~ DOOR 1A 1/4"=1'-0"
B TRANSOM
C MUNTIN
1 1/16x2 1/2" CSGS TO CLG
HD. CT. PLAS
3/16" FILLET WELD TO SILL ∡
7/8" STUCCO
RABBETED FROM 2 1/2x2 1/2" TO MTL DECK
E NORTH JAMB
F MULL
G SOUTH JAMB
PEMKO 209 A DOOR SHOE
PEMKO 107 A THRESHOLD CAP
2 1/2x3 1/2x1/4" SILL ∡
NEW CARPET ON EXIST'G TILE FLOOR
EXIST'G WOOD FLOOR SYSTEM
D WINDOW SILL
H DOOR SILL

6/34 ENTRY DOOR & WINDOW DTLS ~ DR 1A 1 1/2"=1'-0"

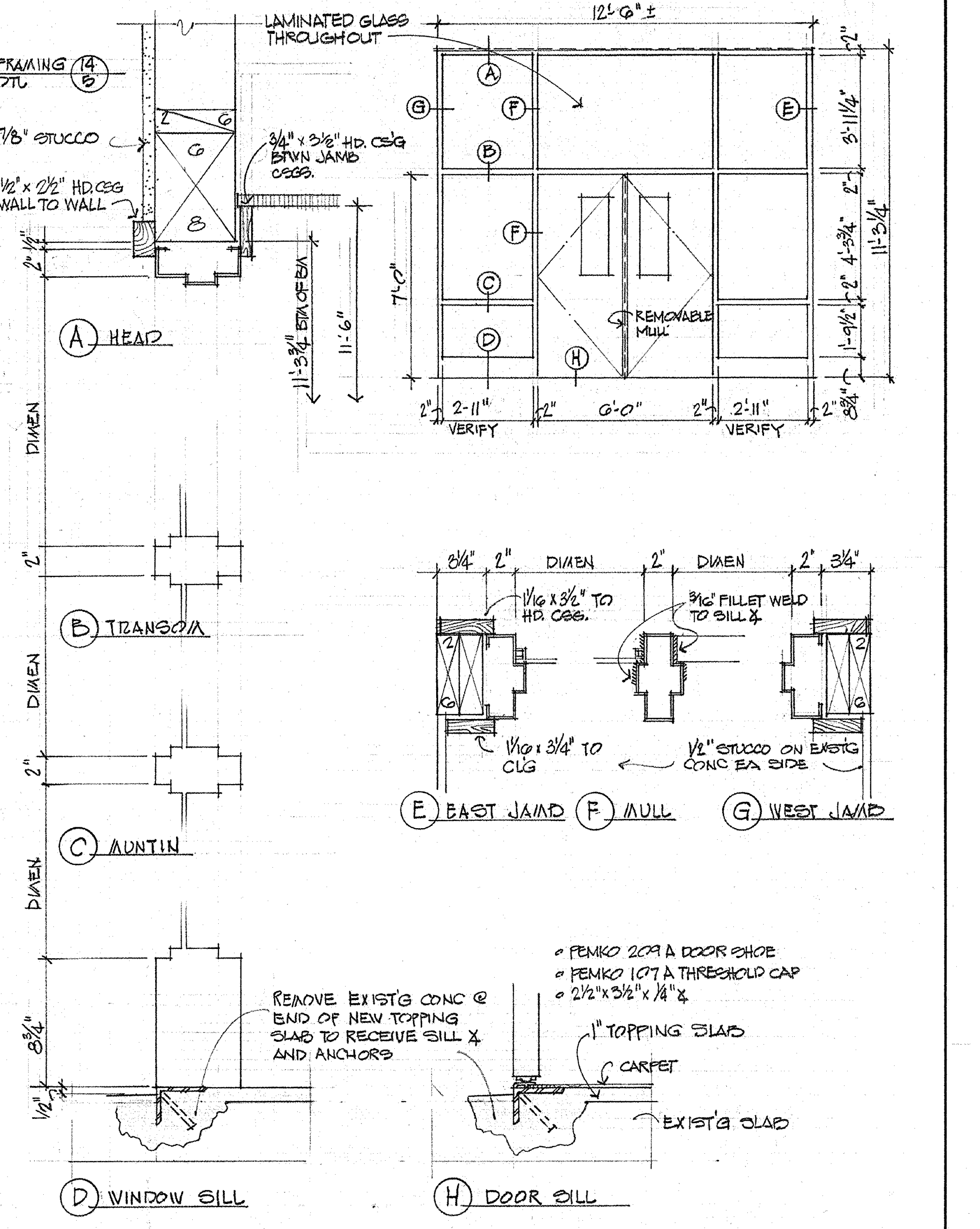
FRAMING DTL 14/5
7/8" STUCCO
1 1/2"x2 1/2" HD. CSG WALL TO WALL
3/4"x3 1/2" HD. CSG BTWN JAMB CSGS.
LAMINATED GLASS THROUGHOUT
12'-6"±
11'-3 3/4" BTM OF BM
11'-6"
A HEAD
REMOVABLE MULL
2'-11" VERIFY 6'-0" 2'-11" VERIFY
B TRANSOM
C MUNTIN
1 1/16x3 1/2" TO HD. CSG.
3/16" FILLET WELD TO SILL ∡
1 1/16x3 1/4" TO CLG
1/2" STUCCO ON EXIST'G CONC EA SIDE
E EAST JAMB
F MULL
G WEST JAMB
REMOVE EXIST'G CONC @ END OF NEW TOPPING SLAB TO RECEIVE SILL ∡ AND ANCHORS
• PEMKO 209 A DOOR SHOE
• PEMKO 107 A THRESHOLD CAP
• 2 1/2"x3 1/2"x1/4" ∡
1" TOPPING SLAB
CARPET
EXIST'G SLAB
D WINDOW SILL
H DOOR SILL

7/34 ENTRY DOOR & WINDOW DTLS ~ DR 23 A 1 1/2"=1'-0"

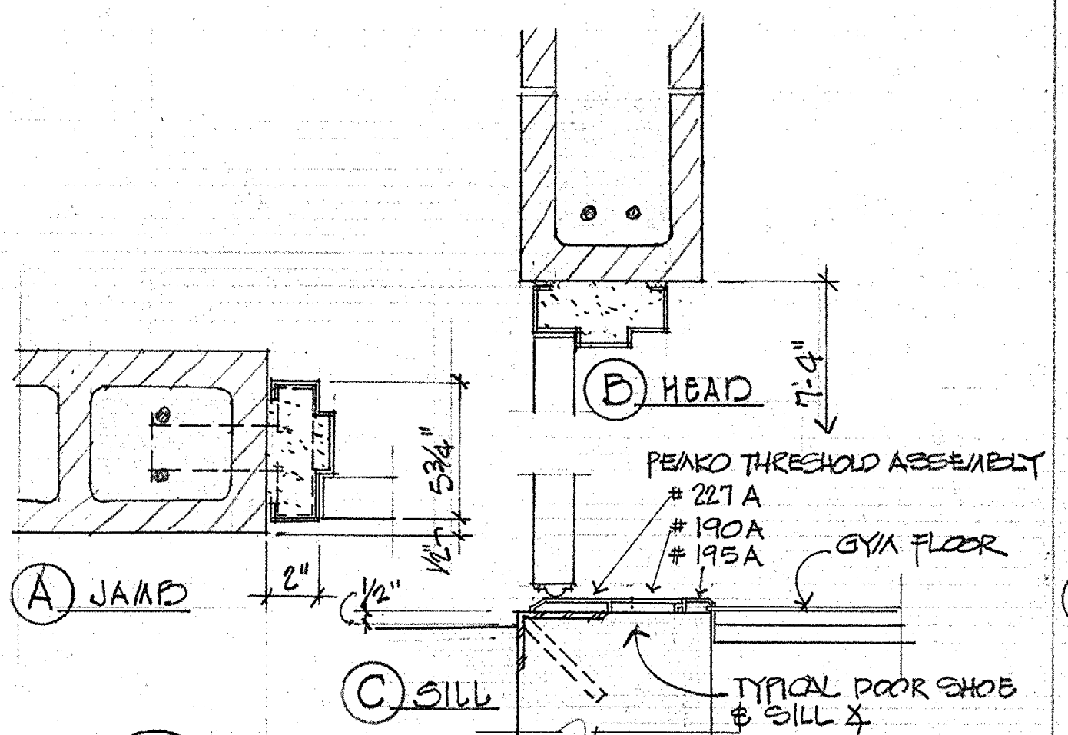
B HEAD
7'-4"
PEMKO THRESHOLD ASSEMBLY
# 227 A
# 190A
# 195A
GYM FLOOR
A JAMB
C SILL
TYPICAL DOOR SHOE & SILL ∡

8/34 DOOR 18D 1 1/2"=1'-0"

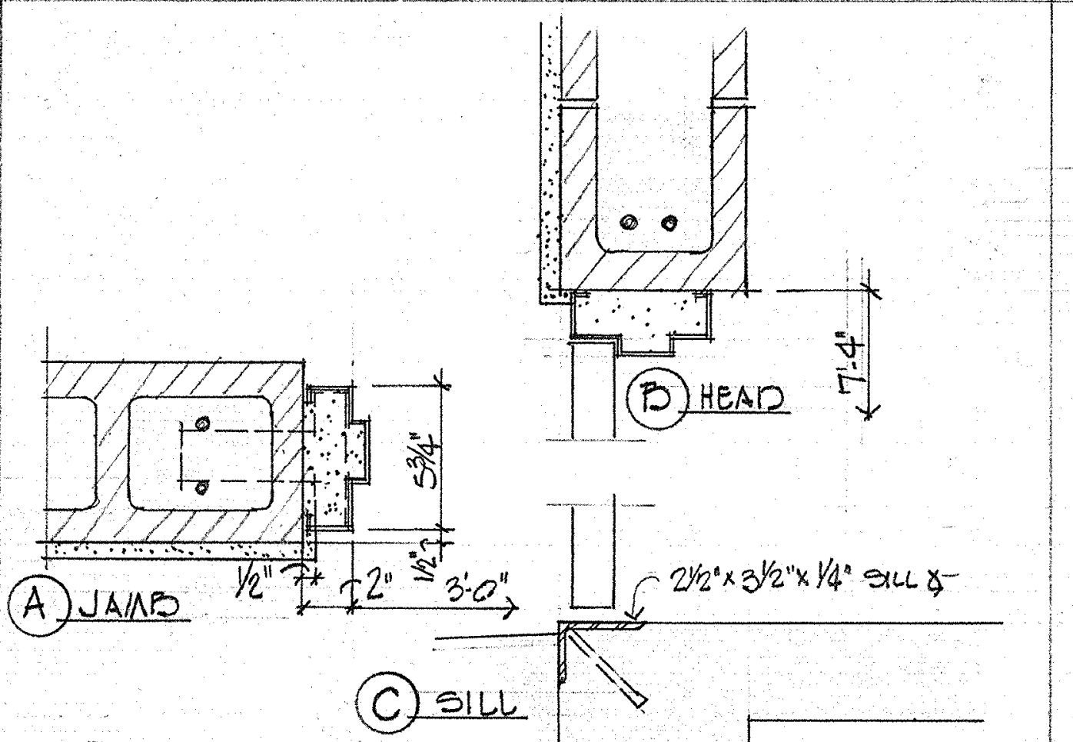
B HEAD
7'-4"
A JAMB
3'-0"
2 1/2"x3 1/2"x1/4" SILL ∡
C SILL

9/34 DOOR 15D 1 1/2"=1'-0"

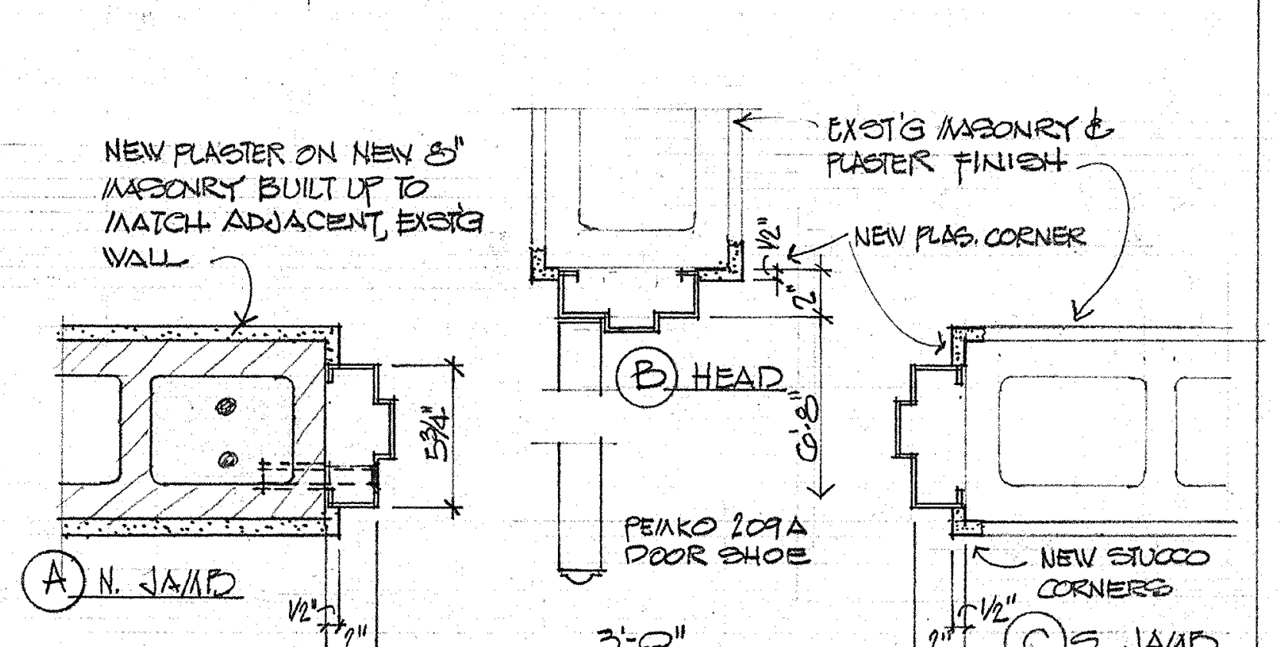
NEW PLASTER ON NEW 8" MASONRY BUILT UP TO MATCH ADJACENT, EXIST'G WALL
EXIST'G MASONRY & PLASTER FINISH
NEW PLAS. CORNER
B HEAD
6'-8"
PEMKO 209A DOOR SHOE
NEW STUCCO CORNERS
A N. JAMB
3'-0"
C S. JAMB

10/34 DOOR 10D 1 1/2"=1'-0"

NOTE: REMOVE EXIST'G DBL DOORS & FRAME. FILL NORTH PORTION OF OPENING LEAVING 3'-4" WIDTH. INSTALL NEW DR & FRAME.

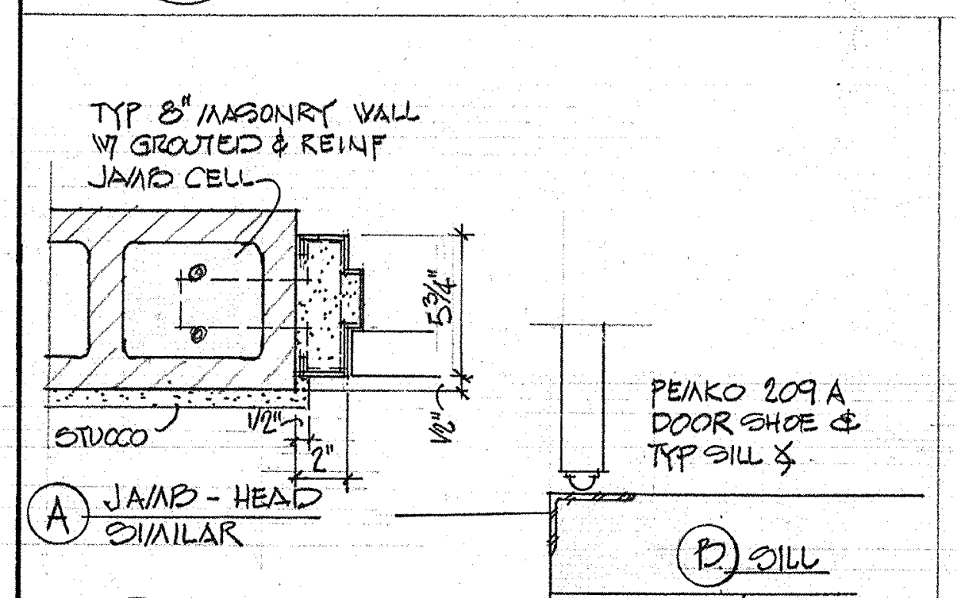
TYP 8" MASONRY WALL W/ GROUTED & REINF JAMB CELL
STUCCO
A JAMB - HEAD SIMILAR
PEMKO 209 A DOOR SHOE & TYP SILL ∡
B SILL

11/34 DOORS 47C & 48C 1 1/2"=1'-0"

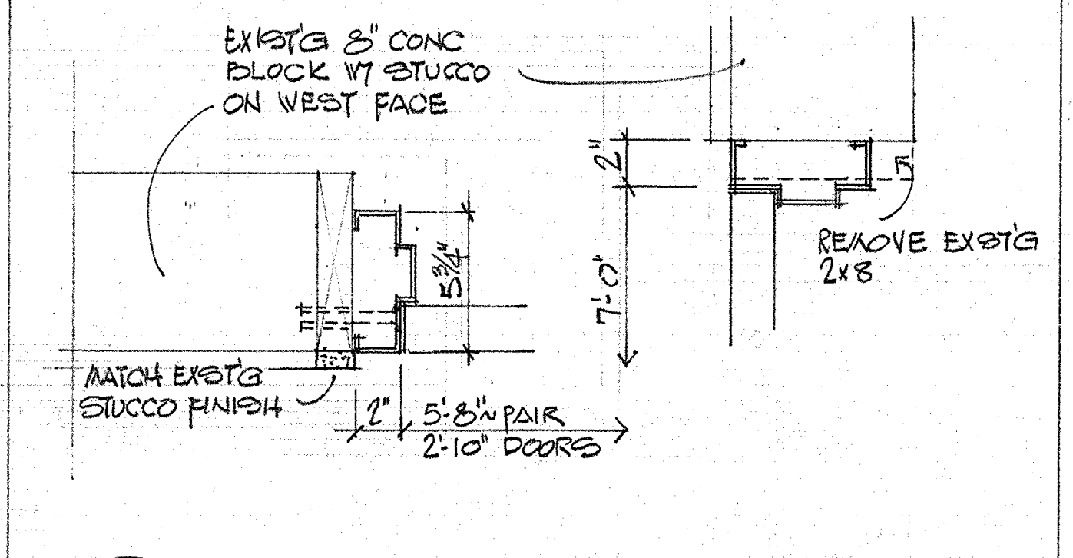
EXIST'G 8" CONC BLOCK W/ STUCCO ON WEST FACE
REMOVE EXIST'G 2x8
7'-0"
MATCH EXIST'G STUCCO FINISH
5'-8" PAIR 2'-10" DOORS

12/34 DOOR 21A 1 1/2"=1'-0"

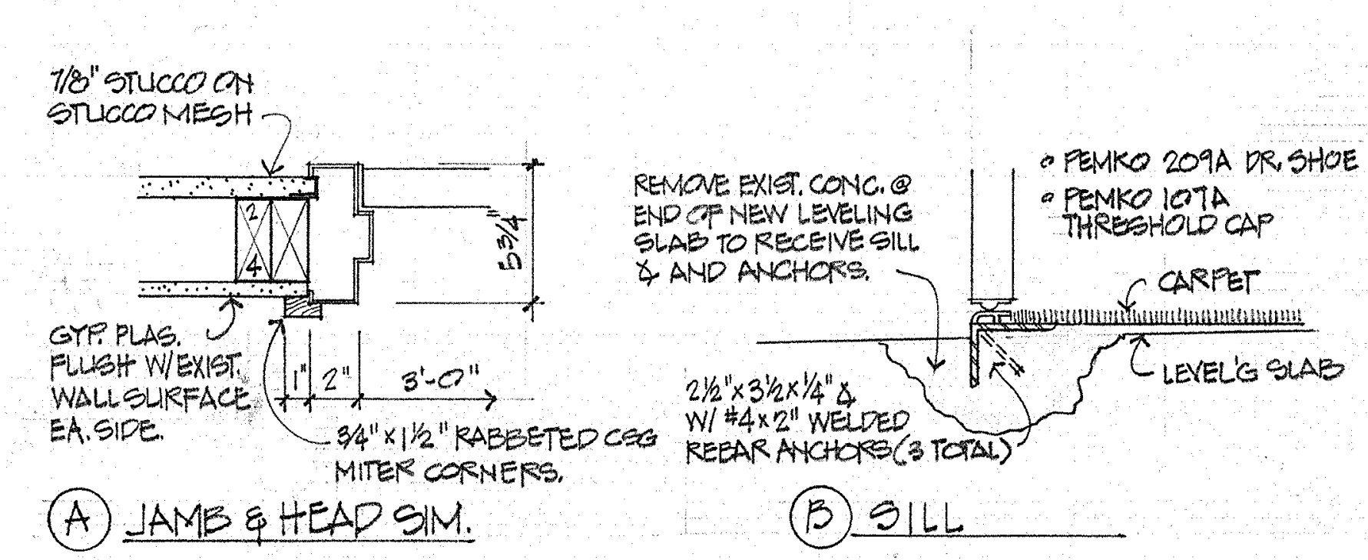
7/8" STUCCO ON STUCCO MESH
GYP. PLAS. FLUSH W/ EXIST. WALL SURFACE EA. SIDE.
3/4"x1 1/2" RABBETED CSG MITER CORNERS.
3'-0"
A JAMB & HEAD SIM.
REMOVE EXIST. CONC. @ END OF NEW LEVELING SLAB TO RECEIVE SILL ∡ AND ANCHORS.
• PEMKO 209A DR. SHOE
• PEMKO 107A THRESHOLD CAP
CARPET
LEVEL'G SLAB
2 1/2"x3 1/2"x1/4" ∡ W/ #4x2" WELDED REBAR ANCHORS (3 TOTAL)
B SILL

13/34 DOOR 15A 1 1/2"=1'-0"

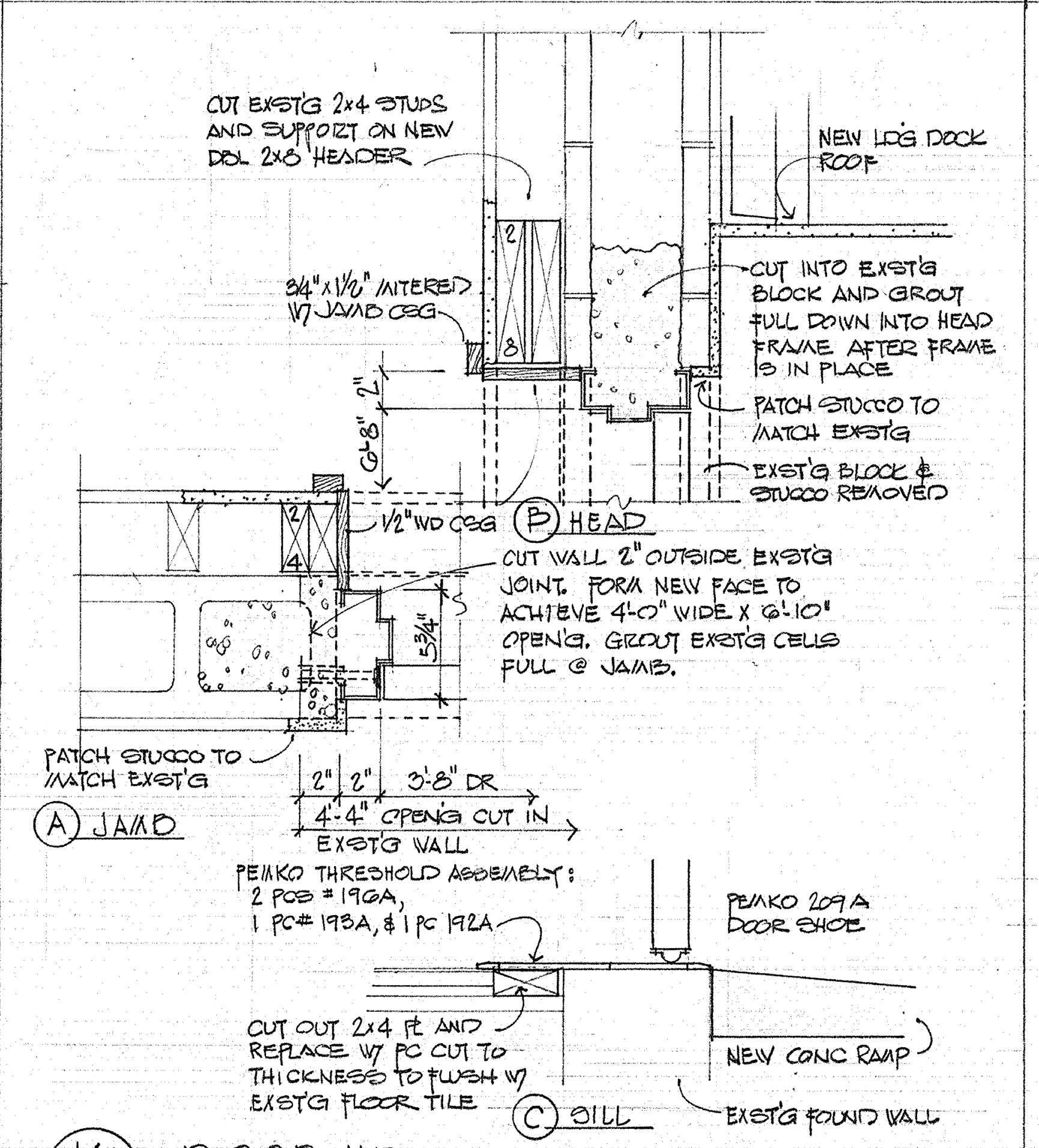
CUT EXIST'G 2x4 STUDS AND SUPPORT ON NEW DBL 2x8 HEADER
NEW LDG DOCK ROOF
3/4"x1 1/2" MITERED W/ JAMB CSG
CUT INTO EXIST'G BLOCK AND GROUT FULL DOWN INTO HEAD FRAME AFTER FRAME IS IN PLACE
PATCH STUCCO TO MATCH EXIST'G
EXIST'G BLOCK & STUCCO REMOVED
6'-8"
1/2" WD CSG
B HEAD
CUT WALL 2" OUTSIDE EXIST'G JOINT. FORM NEW FACE TO ACHIEVE 4'-0" WIDE x 6'-10" OPEN'G. GROUT EXIST'G CELLS FULL @ JAMB.
PATCH STUCCO TO MATCH EXIST'G
A JAMB
3'-8" DR
4'-4" OPEN'G CUT IN EXIST'G WALL
PEMKO THRESHOLD ASSEMBLY: 2 PCS # 196A, 1 PC # 193A, & 1 PC 192A
PEMKO 209A DOOR SHOE
CUT OUT 2x4 PL AND REPLACE W/ PC CUT TO THICKNESS TO FLUSH W/ EXIST'G FLOOR TILE
NEW CONC RAMP
EXIST'G FOUND WALL
C SILL

14/34 DOOR 11D 1 1/2"=1'-0"

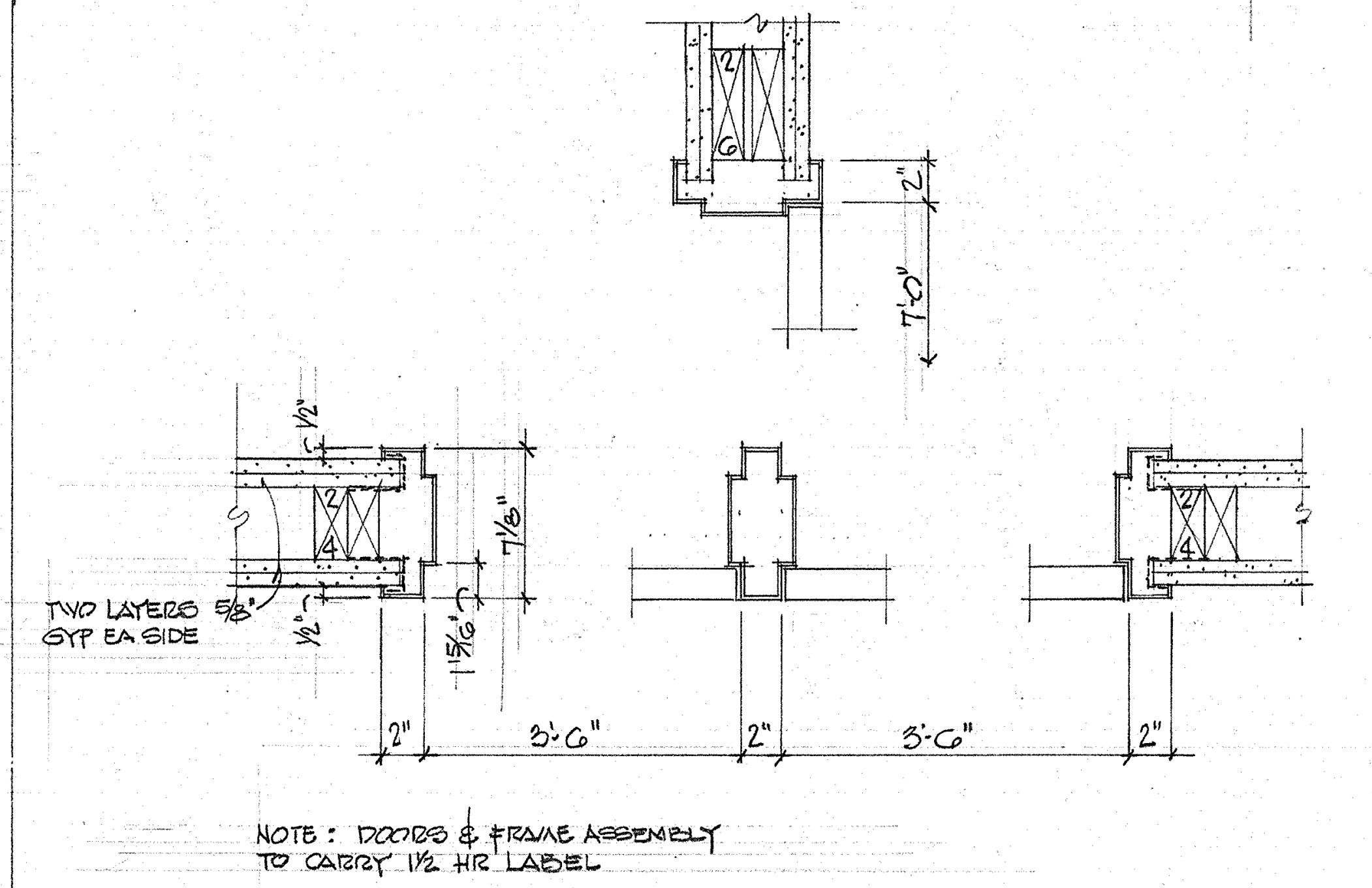
7'-0"
TWO LAYERS 5/8" GYP EA SIDE
1 5/16"
3'-6" 3'-6"

NOTE: DOORS & FRAME ASSEMBLY TO CARRY 1 1/2 HR LABEL

15/34 DTLS @ DR 45 B 1 1/2"=1'-0"

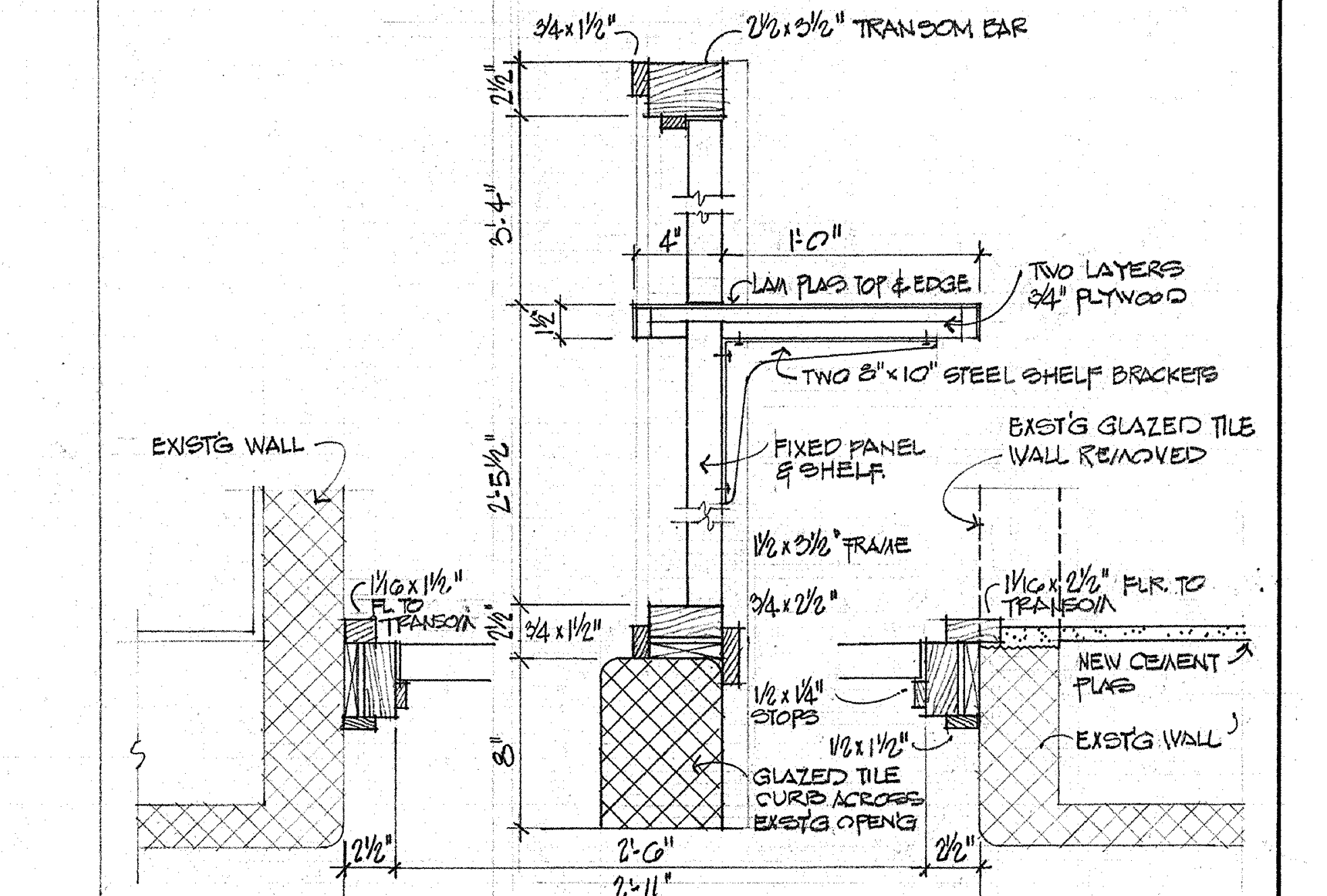
3/4x1 1/2"
2 1/2x3 1/2" TRANSOM BAR
1'-0"
LAM PLAS TOP & EDGE
TWO LAYERS 3/4" PLYWOOD
TWO 8"x10" STEEL SHELF BRACKETS
EXIST'G WALL
FIXED PANEL & SHELF
EXIST'G GLAZED TILE WALL REMOVED
1 1/2x3 1/2" FRAME
1 1/16x1 1/2" PL TO TRANSOM
1 1/16x2 1/2" PLR. TO TRANSOM
NEW CEMENT PLAS
1/2x1/4" STOPS
1/2x1 1/2"
EXIST'G WALL
GLAZED TILE CURB ACROSS EXIST'G OPEN'G
2'-6"
2'-11"

16/34 DTLS @ DOOR 36C 1 1/2"=1'-0"

EXTERIOR DOOR ELEVATIONS & DETAILS

SWEET HOME HIGH SCHOOL
ADDITIONS AND ALTERATIONS 1974
DISTRICT 55 LINN COUNTY, OREGON

ARCHITECTS
HAMLIN, MARTIN,
SCHULTZ & GEYER
AIA
159 W. 12TH EUGENE, OREGON 97401

A
34
JOB NO.

REGISTERED ARCHITECT
CLARE K. HAMLIN
Clare K Hamlin
EUGENE, OREGON
STATE OF OREGON

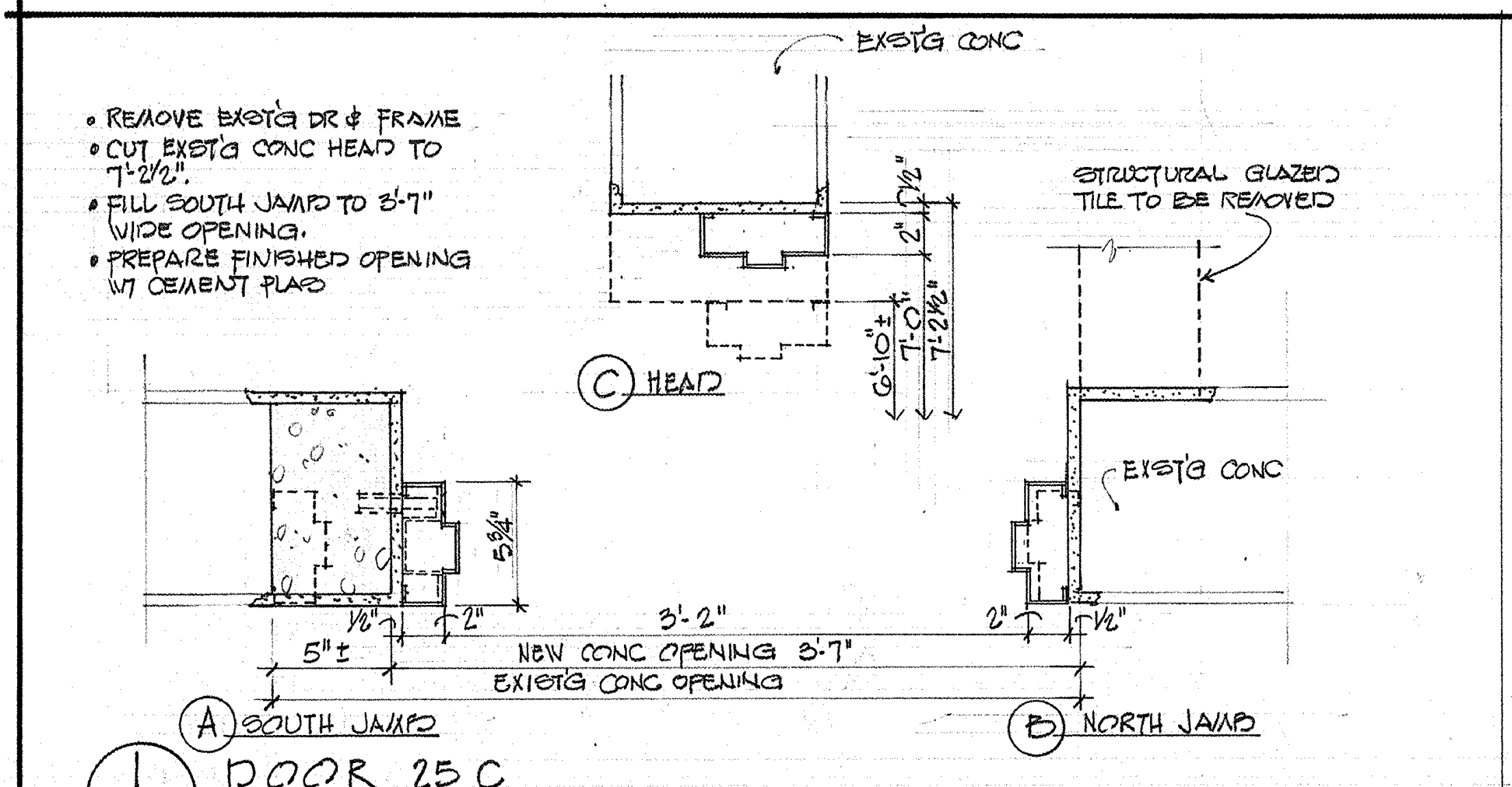
• REMOVE EXST'G DR & FRAME
• CUT EXST'G CONC HEAD TO 7'-2½"
• FILL SOUTH JAMB TO 3'-7" WIDE OPENING
• PREPARE FINISHED OPENING W/ CEMENT PLAS
EXST'G CONC
STRUCTURAL GLAZED TILE TO BE REMOVED
C HEAD
EXST'G CONC
NEW CONC OPENING 3'-7"
EXST'G CONC OPENING
A SOUTH JAMB
B NORTH JAMB

1/35 DOOR 25C 1½"=1'-0"

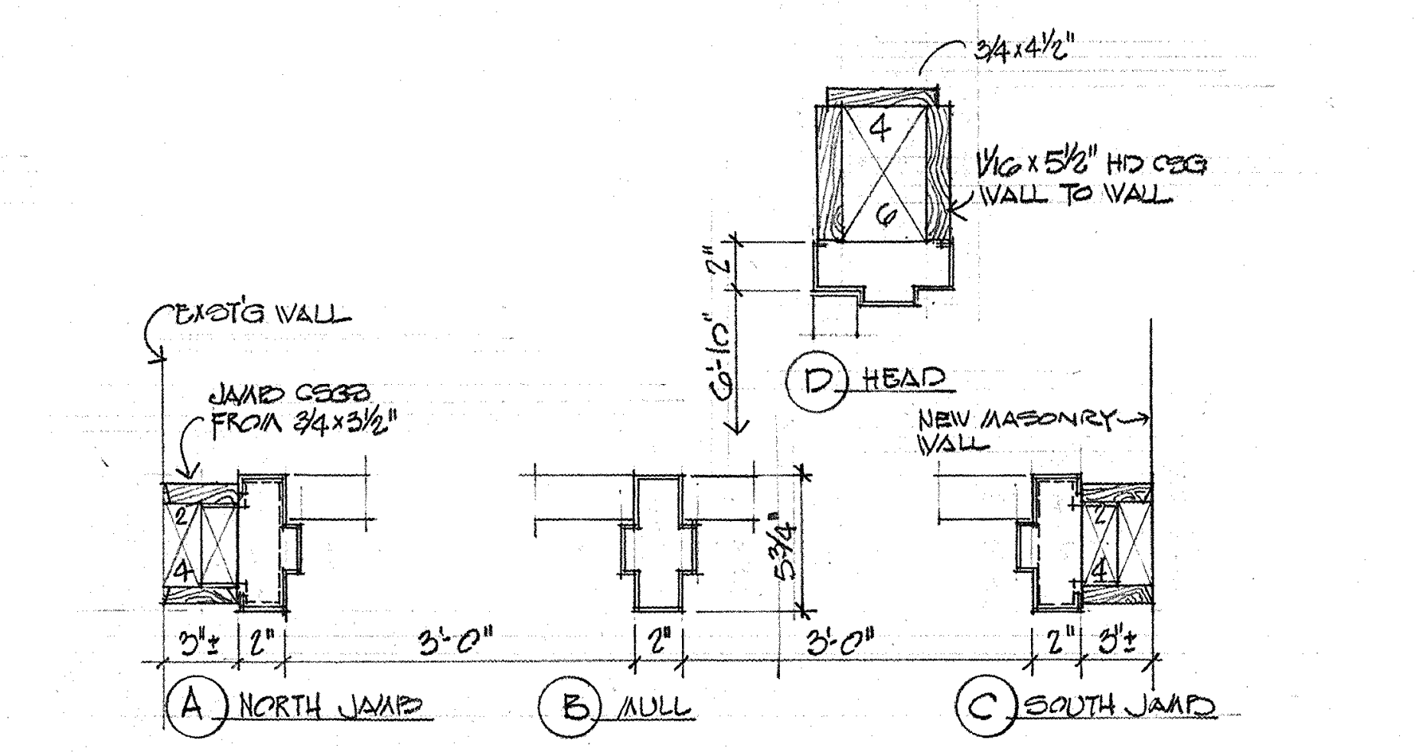
EXST'G WALL
JAMB CSGS FROM 3/4 x 5¼"
1⅛ x 5⅜" HD CSG WALL TO WALL
D HEAD
NEW MASONRY WALL
A NORTH JAMB
B MULL
C SOUTH JAMB

2/35 DOOR 38C 1½"=1'-0"

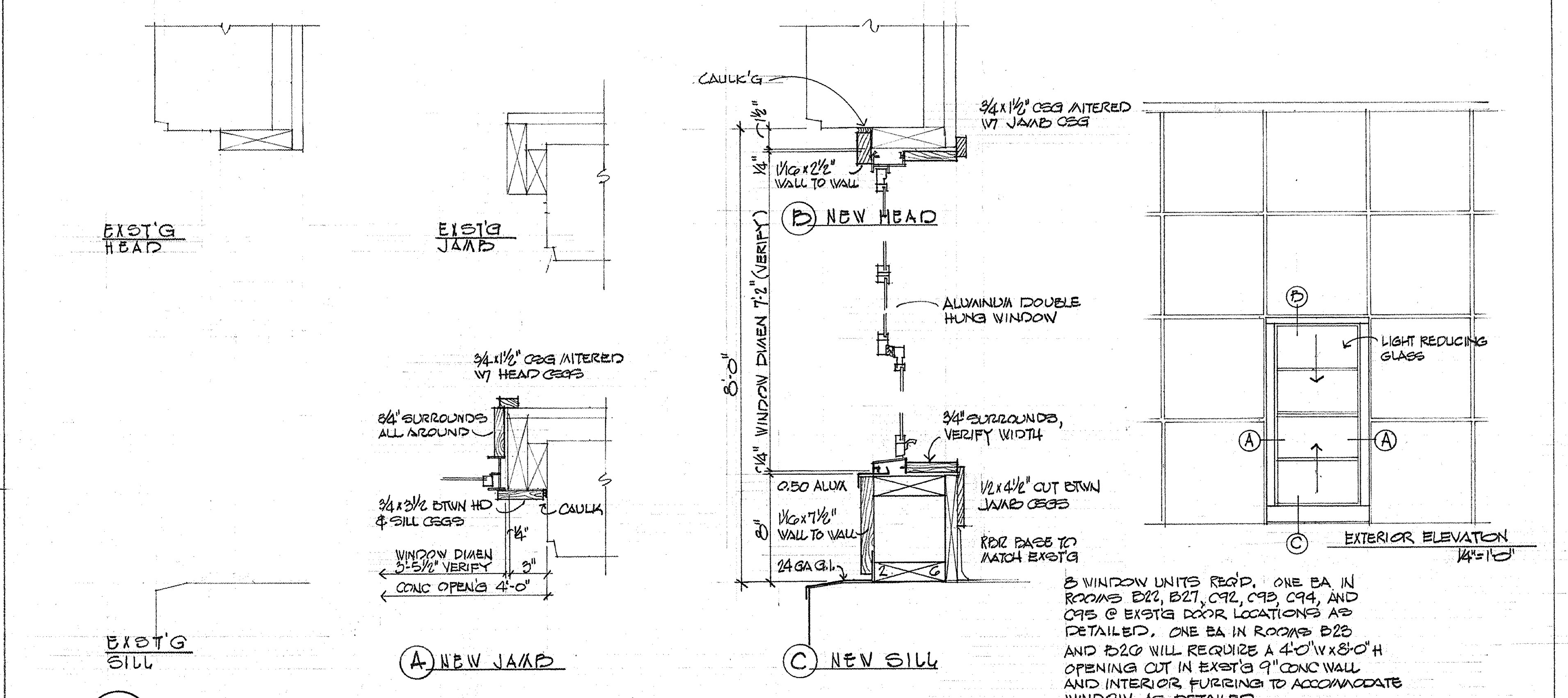
EXST'G HEAD
EXST'G JAMB
EXST'G SILL
CAULK'G
3/4 x 1½" CSG ALTERED W/ JAMB CSG
B NEW HEAD
ALUMINUM DOUBLE HUNG WINDOW
3/4 x 1½" CSG ALTERED W/ HEAD CSG
⅜" SURROUNDS ALL AROUND
⅜" SURROUNDS, VERIFY WIDTH
½ x 4½" CUT BTWN JAMB CSGS
RBR BASE TO MATCH EXST'G
A NEW JAMB
C NEW SILL
LIGHT REDUCING GLASS
EXTERIOR ELEVATION ¼"=1'-0"
8 WINDOW UNITS REQ'D. ONE EA IN ROOMS B22, B27, C92, C93, C94, AND C95 @ EXST'G DOOR LOCATIONS AS DETAILED. ONE EA IN ROOMS B23 AND B26 WILL REQUIRE A 4'-0"W x 8'-0"H OPENING CUT IN EXST'G 9" CONC WALL AND INTERIOR FURRING TO ACCOMMODATE WINDOW AS DETAILED.

3/35 WINDOWS IN SOUTH WALL OF 8 EXST'G CLASSROOMS (ADDITIVE ALTERNATE B) 1½"=1'-0"

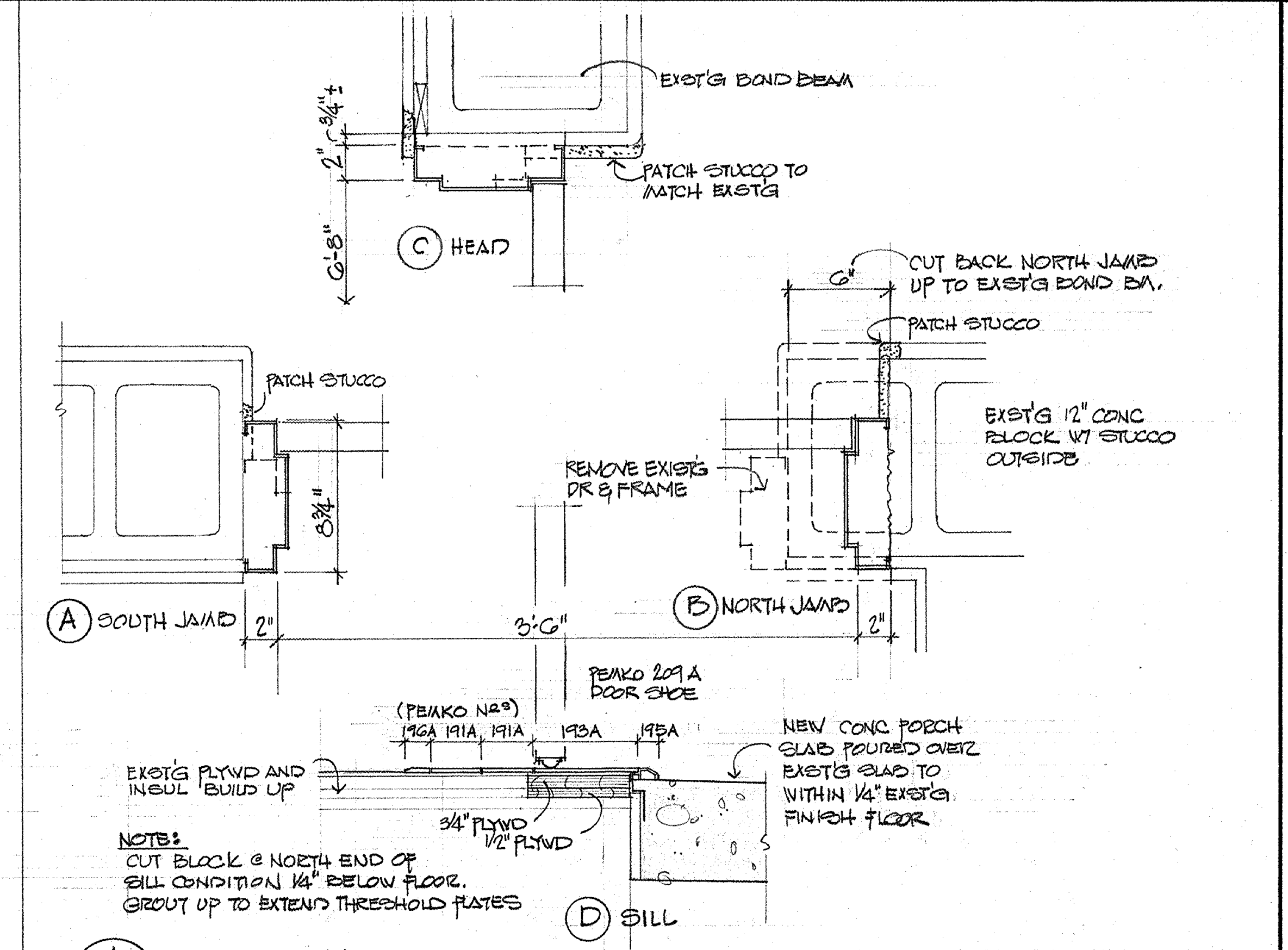
EXST'G BOND BEAM
PATCH STUCCO TO MATCH EXST'G
C HEAD
CUT BACK NORTH JAMB UP TO EXST'G BOND BM.
PATCH STUCCO
EXST'G 12" CONC BLOCK W/ STUCCO CORBELS
REMOVE EXST'G DR & FRAME
A SOUTH JAMB
B NORTH JAMB
PEMKO 209A DOOR SHOE
NEW CONC PORCH SLAB POURED OVER EXST'G SLAB TO WITHIN ½" EXST'G FINISH FLOOR
EXST'G PLYWD AND INSUL BUILD UP
NOTES:
CUT BLOCK @ NORTH END OF SILL CONDITION ½" BELOW FLOOR. GROUT UP TO EXTEND THRESHOLD PLATES
D SILL

4/35 DOOR 14D 1½"=1'-0"

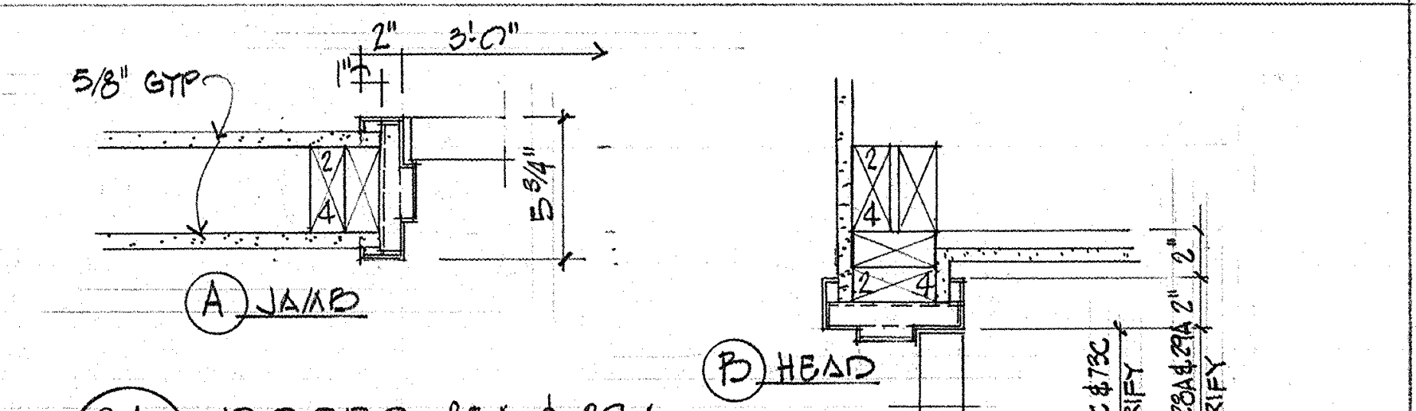
⅝" GYP
A JAMB
B HEAD

2A/35 DOORS 28A & 29A 72C & 73C 1½"=1'-0"

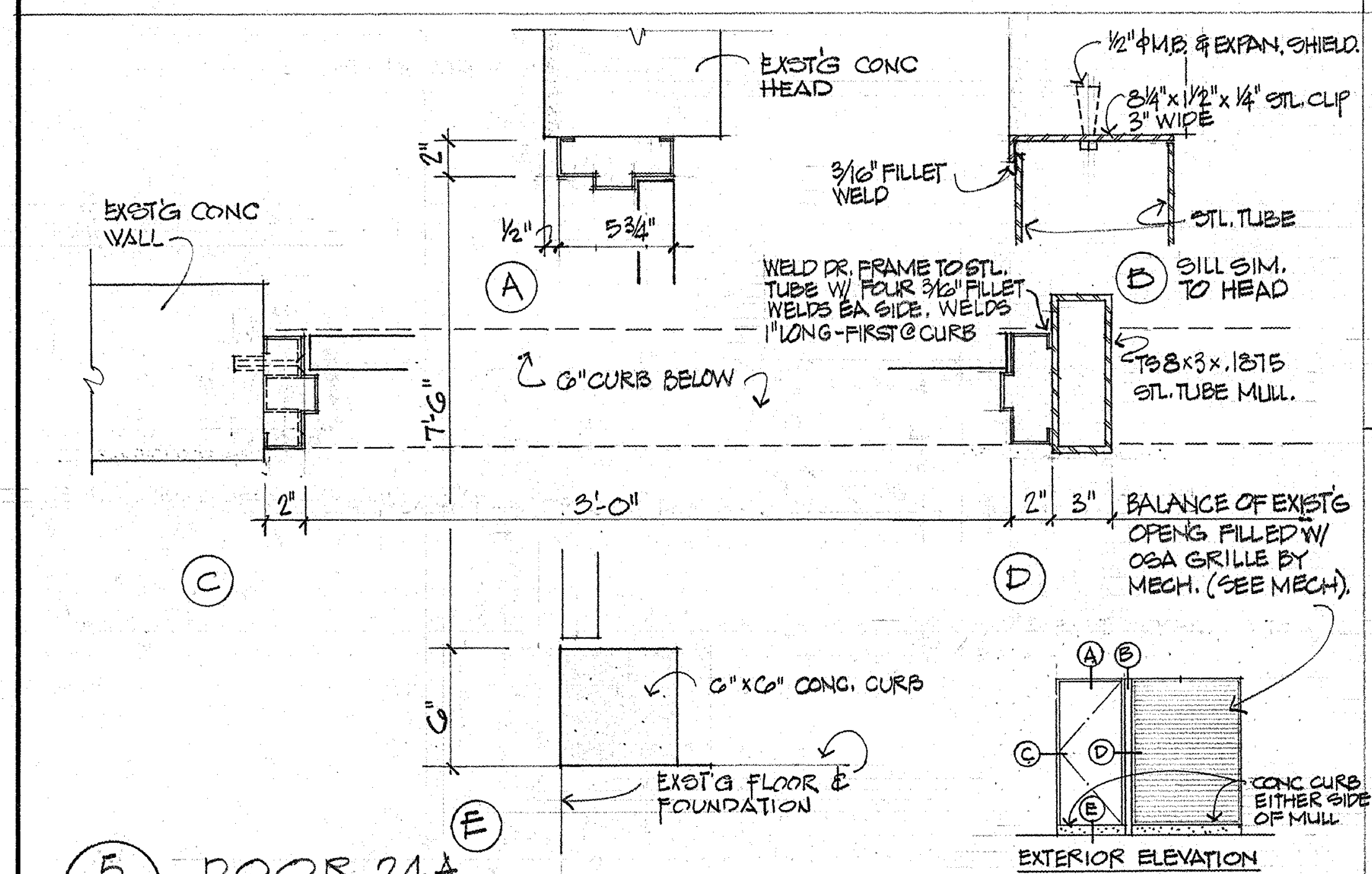
EXST'G CONC HEAD
EXST'G CONC WALL
⅜" FILLET WELD
WELD DR FRAME TO STL TUBE W/ FOUR ⅜" FILLET WELDS EA SIDE. WELDS 1" LONG-FIRST COURSE
STL TUBE
B SILL SIM. TO HEAD
TS 8 x 3 x .1875 STL TUBE MULL
6" CURB BELOW
BALANCE OF EXST'G OPENG FILLED W/ CEM GRILLE BY MECH. (SEE MECH.)
6" x 6" CONC CURB
EXST'G FLOOR & FOUNDATION
E
CONC CURB EITHER SIDE OF MULL
EXTERIOR ELEVATION

5/35 DOOR 24A 1½"=1'-0"

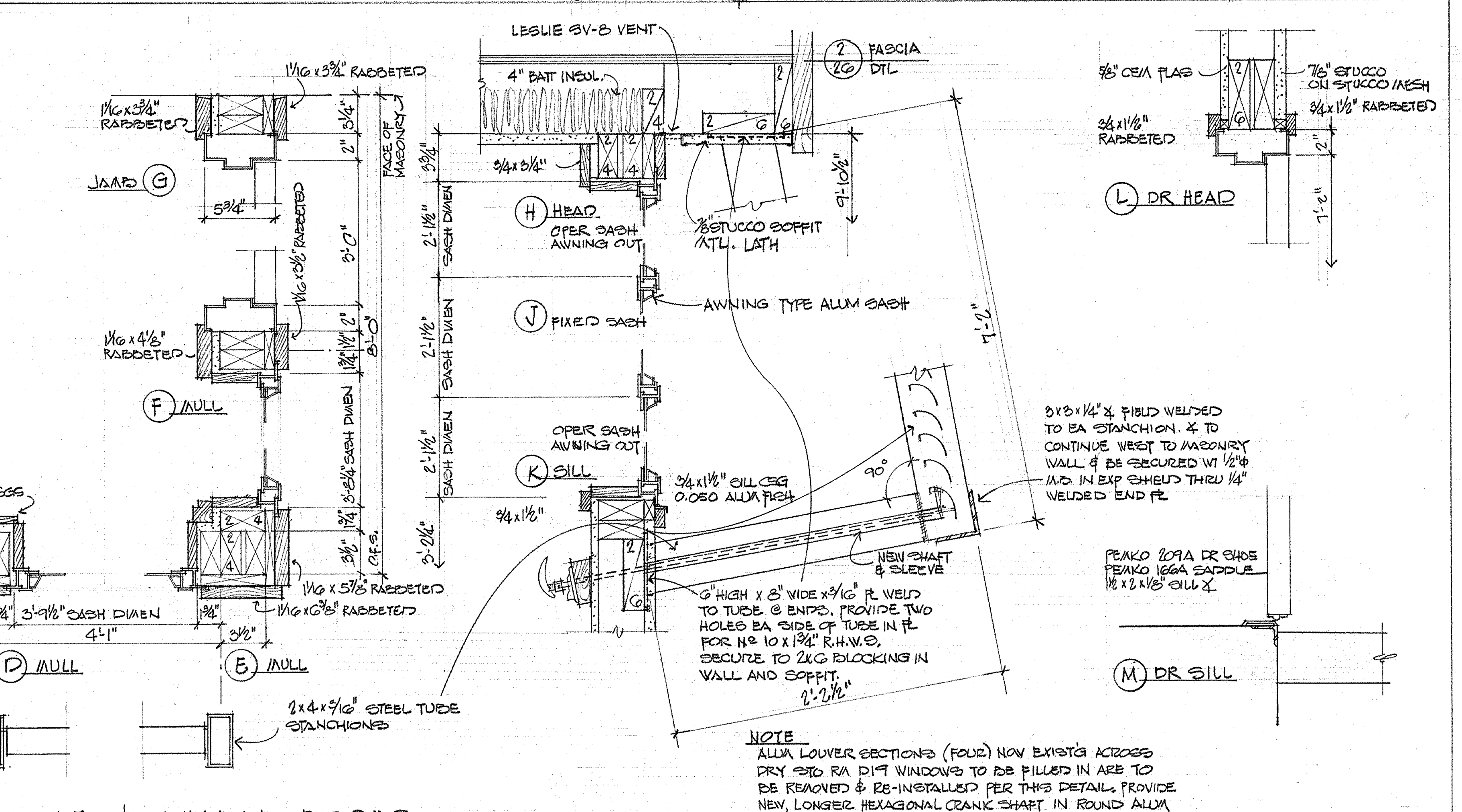
LOUVRE SV-8 VENT
4" BATT INSUL
2/26 FASCIA DTL
H HEAD
OPER SASH AWNING OUT
⅜" STUCCO SOFFIT ATL. LATH
J FIXED SASH
AWNING TYPE ALUM SASH
K SILL
OPER SASH AWNING OUT
3/4 x 1⅛" SILL CSG
0.050 ALUM FLASH
NEW SHAFT & SLEEVE
6" HIGH x 8" WIDE x 3/16" PL WELD TO TUBE @ ENDS. PROVIDE TWO HOLES EA SIDE OF TUBE IN PL FOR Nº 10 x 1¾" R.H.W.S. SECURE TO 2x6 BLOCKING IN WALL AND SOFFIT.
2'-2½"
L DR HEAD
M DR SILL
PEMKO 209A DR SHOE
PEMKO 166A SADDLE
1½ x 2 x ⅛" SILL ∠
A JAMB
B MULL @ WALL
C MULL
D MULL
E MULL
2 x 4 x 3/16" STEEL TUBE STANCHIONS
NOTE
ALUM LOUVER SECTIONS (FOUR) NOW EXIST'G ACROSS DRY STO RM D19 WINDOWS TO BE FILLED IN ARE TO BE REMOVED & RE-INSTALLED PER THIS DETAIL. PROVIDE NEW, LONGER HEXAGONAL CRANK SHAFT IN ROUND ALUM SLEEVE. MOUNT CRANK ON BEVELED CLEAT.

6/35 WINDOW, DOOR & SUN LOUVER DTLS @ PLANT & ANIMAL ROOMS 1½"=1'-0"

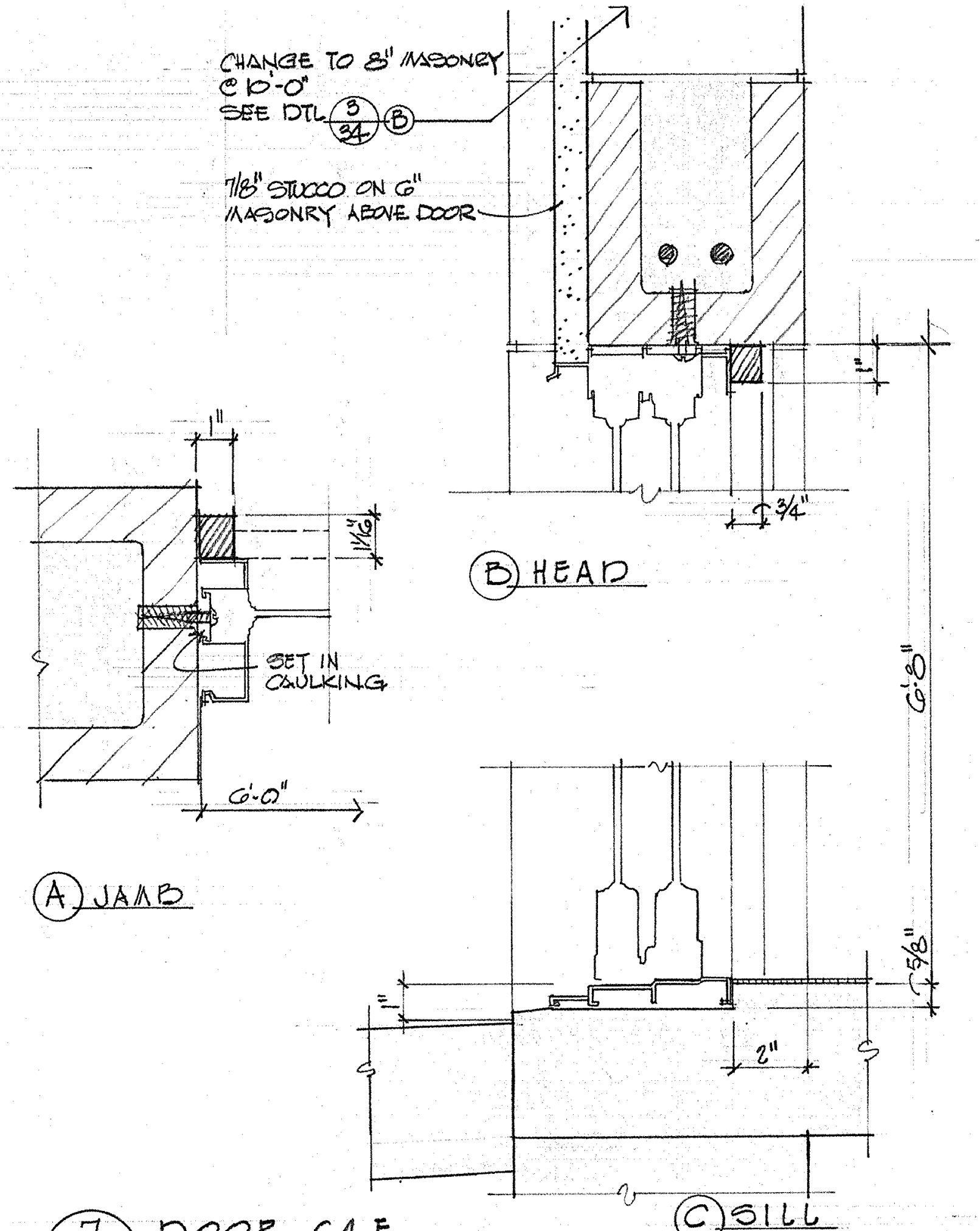
CHANGE TO 8" MASONRY @ 6'-0" SEE DTL 3/34 B
⅞" STUCCO ON 6" MASONRY ABOVE DOOR
B HEAD
SET IN CAULKING
A JAMB
C SILL

7/35 DOOR 64E ALUMINUM SLIDING DOOR 3"=1'-0"

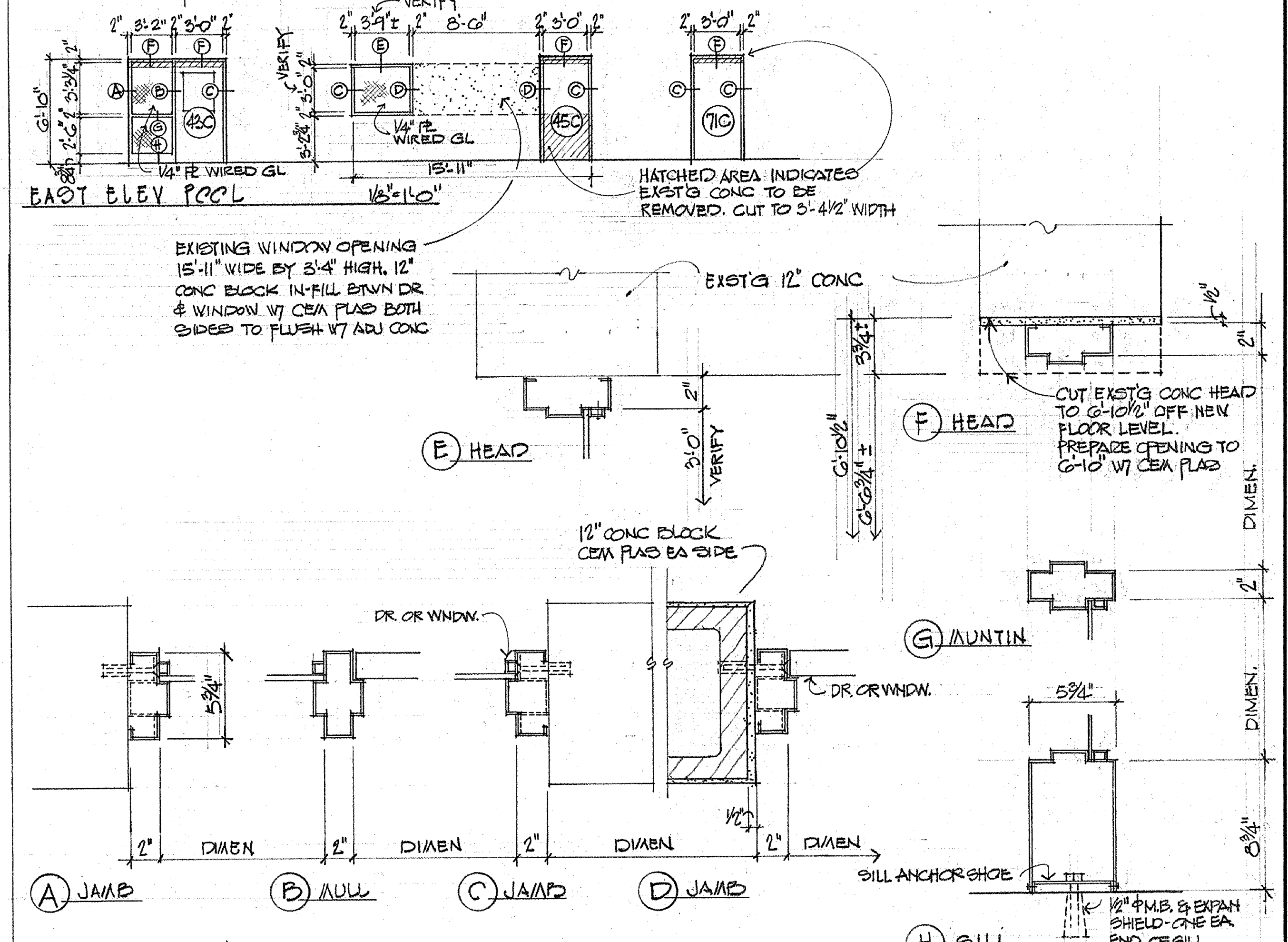
EAST ELEV POOL
HATCHED AREA INDICATES EXST'G CONC TO BE REMOVED. CUT TO 5'-4½" WIDTH
EXISTING WINDOW OPENING 15'-11" WIDE BY 8'-4" HIGH. 12" CONC BLOCK IN-FILL BTWN DR & WINDOW W/ CEM PLAS BOTH SIDES TO FLUSH W/ ADJ CONC
EXST'G 12" CONC
E HEAD
F HEAD
CUT EXST'G CONC HEAD TO 6'-10" OFF NEW FLOOR LEVEL. PREPARE OPENING TO 6'-10" W/ CEM PLAS
12" CONC BLOCK CEM PLAS EA SIDE
G MUNTIN
A JAMB
B MULL
C JAMB
D JAMB
SILL ANCHOR SHOE
H SILL

8/35 DRS & WINDOWS @ EAST WALL OF POOL DRS 43C, 45C, & 71C 1½"=1'-0"

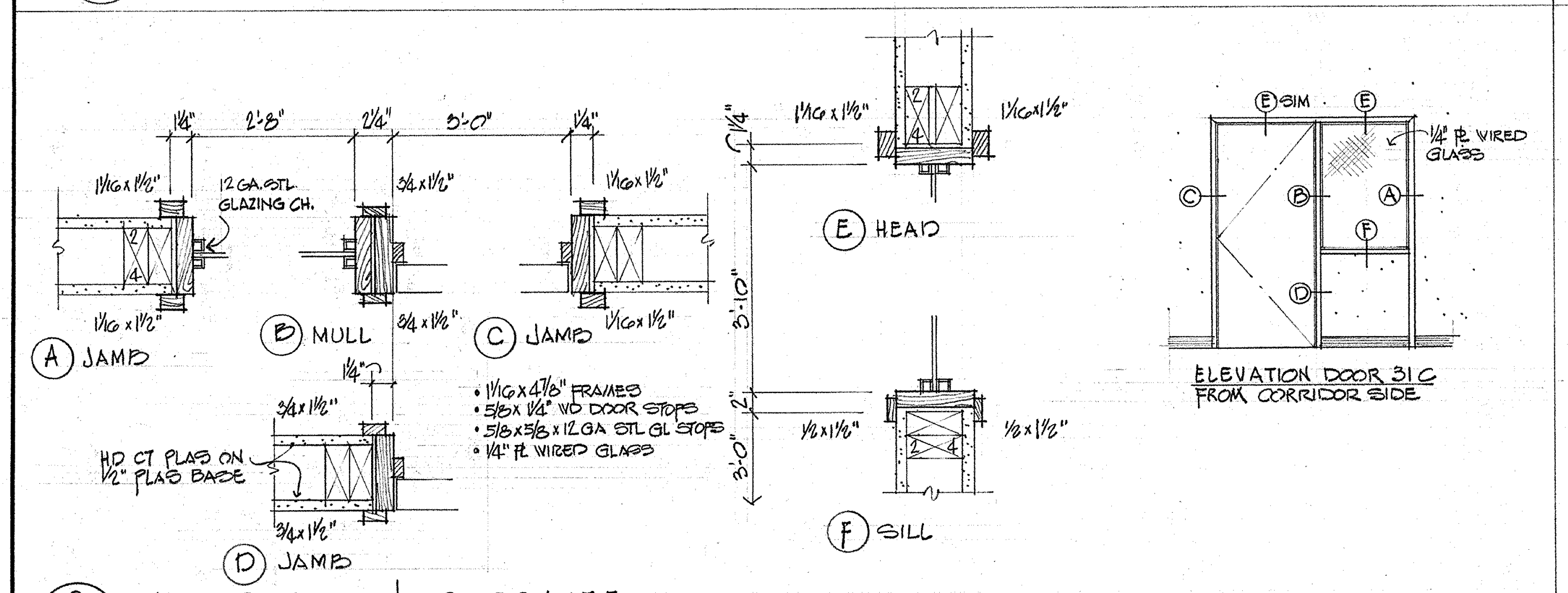
A JAMB
B MULL
C JAMB
D JAMB
E HEAD
F SILL
HD CT PLAS ON ½" PLAS BASE
• 1⅛ x 4½" FRAMES
• 5⁄16 x 1½" WD DOOR STOPS
• ⅝ x ⅝ x ⅛" 12 GA STL GL STOPS
• ¼" PL WIRED GLASS
ELEVATION DOOR 31C FROM CORRIDOR SIDE
¼" PL WIRED GLASS

9/35 DOOR 31C & SIDELITE 1½"=1'-0"

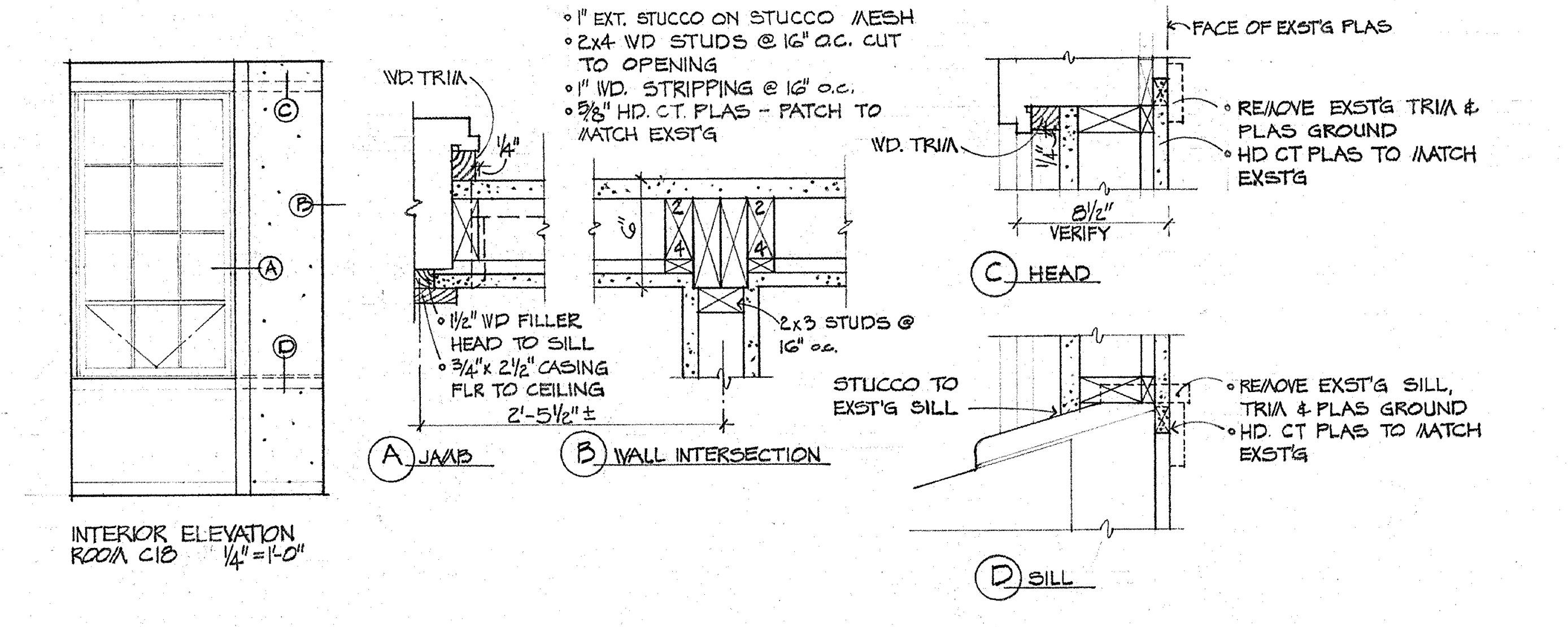
• 1" EXT. STUCCO ON STUCCO MESH
• 2x4 WD STUDS @ 16" O.C. CUT TO OPENING
• 1" WD. STRIPPING @ 16" O.C.
• ⅝" HD. CT. PLAS – PATCH TO MATCH EXST'G
WD. TRIM
• ⅛" WD FILLER HEAD TO SILL
• ¾ x 2½" CASING FLR TO CEILING
A JAMB
B WALL INTERSECTION
INTERIOR ELEVATION ROOM C18 ¼"=1'-0"
FACE OF EXST'G PLAS
• REMOVE EXST'G TRIM & PLAS GROUND
• HD CT PLAS TO MATCH EXST'G
C HEAD
2x3 STUDS @ 16" O.C.
STUCCO TO EXST'G SILL
• REMOVE EXST'G SILL, TRIM & PLAS GROUND
• HD CT PLAS TO MATCH EXST'G
D SILL

10/35 INFILLED WINDOWS @ ROOMS C17 & C18 1½"=1'-0"

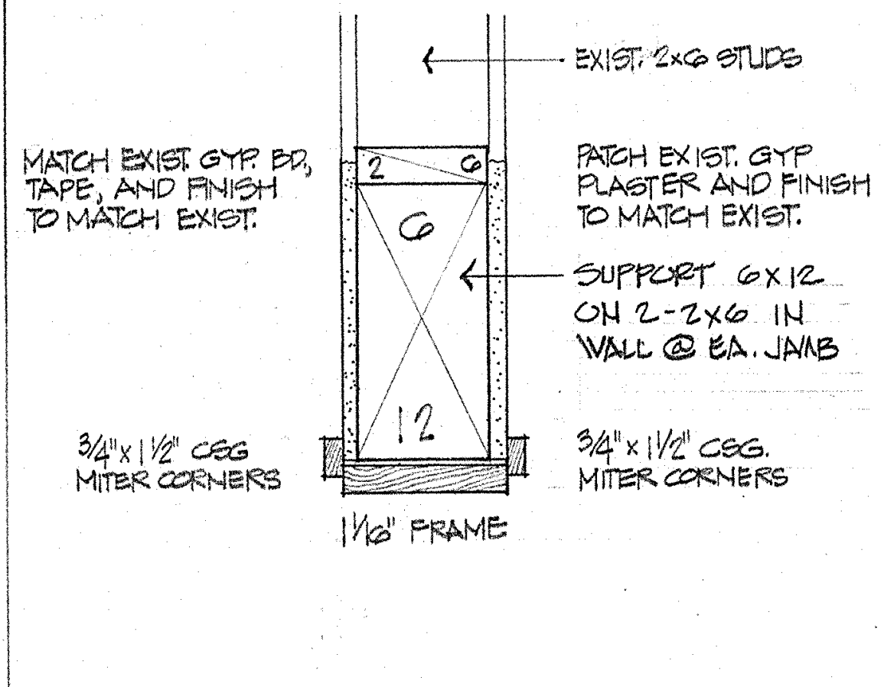
EXST. 2x6 STUDS
MATCH EXST GYP BD, TAPE, AND FINISH TO MATCH EXIST.
PATCH EXST. GYP PLASTER AND FINISH TO MATCH EXIST.
SUPPORT 6x12 ON 2-2x6 IN WALL @ EA. JAMB
¾ x 1½" CSG MITER CORNERS
1½" FRAME

11/35 HEAD WALL BETWEEN DRY STO. D19 AND CORRIDOR D15 1½"=1'-0"

JAMBS SIMILAR TO HEAD

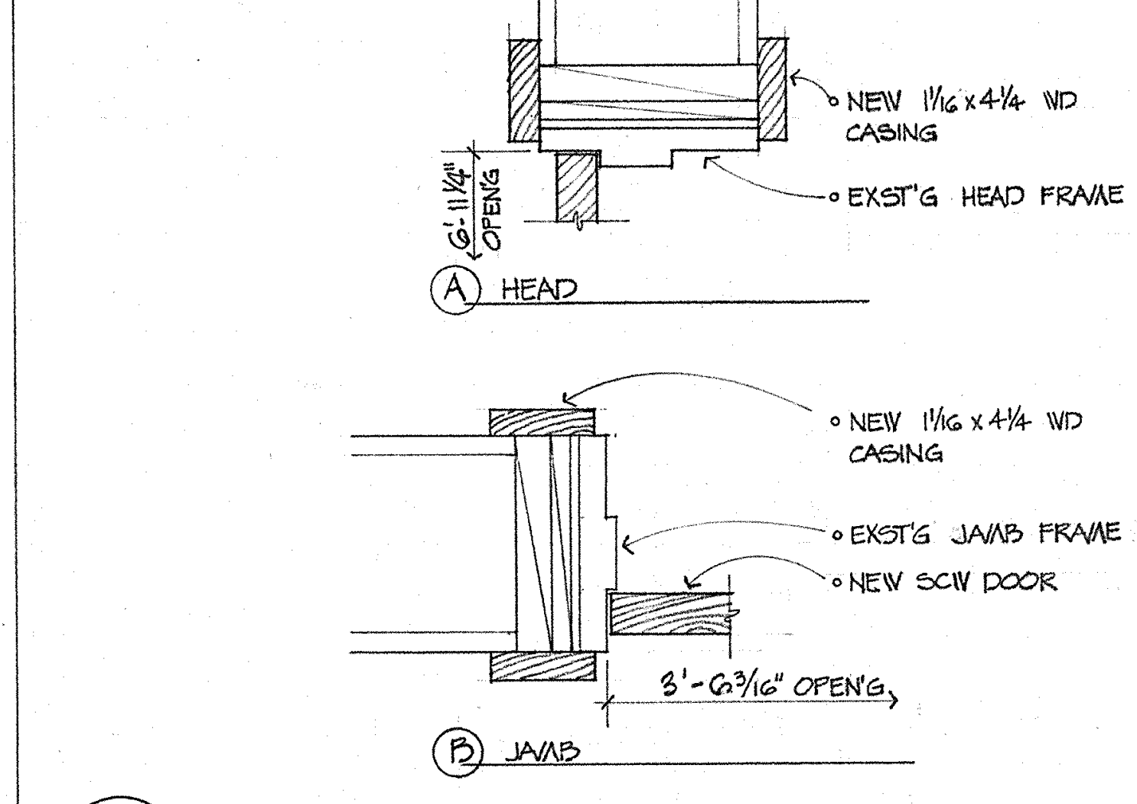
NEW 1⅛ x 4⅛ WD CASING
EXST'G HEAD FRAME
A HEAD
NEW 1⅛ x 4⅛ WD CASING
EXST'G JAMB FRAME
NEW SCW DOOR
3'-6⅝" OPENG.
B JAMB

12/35 DOOR 74C 1½"=1'-0"

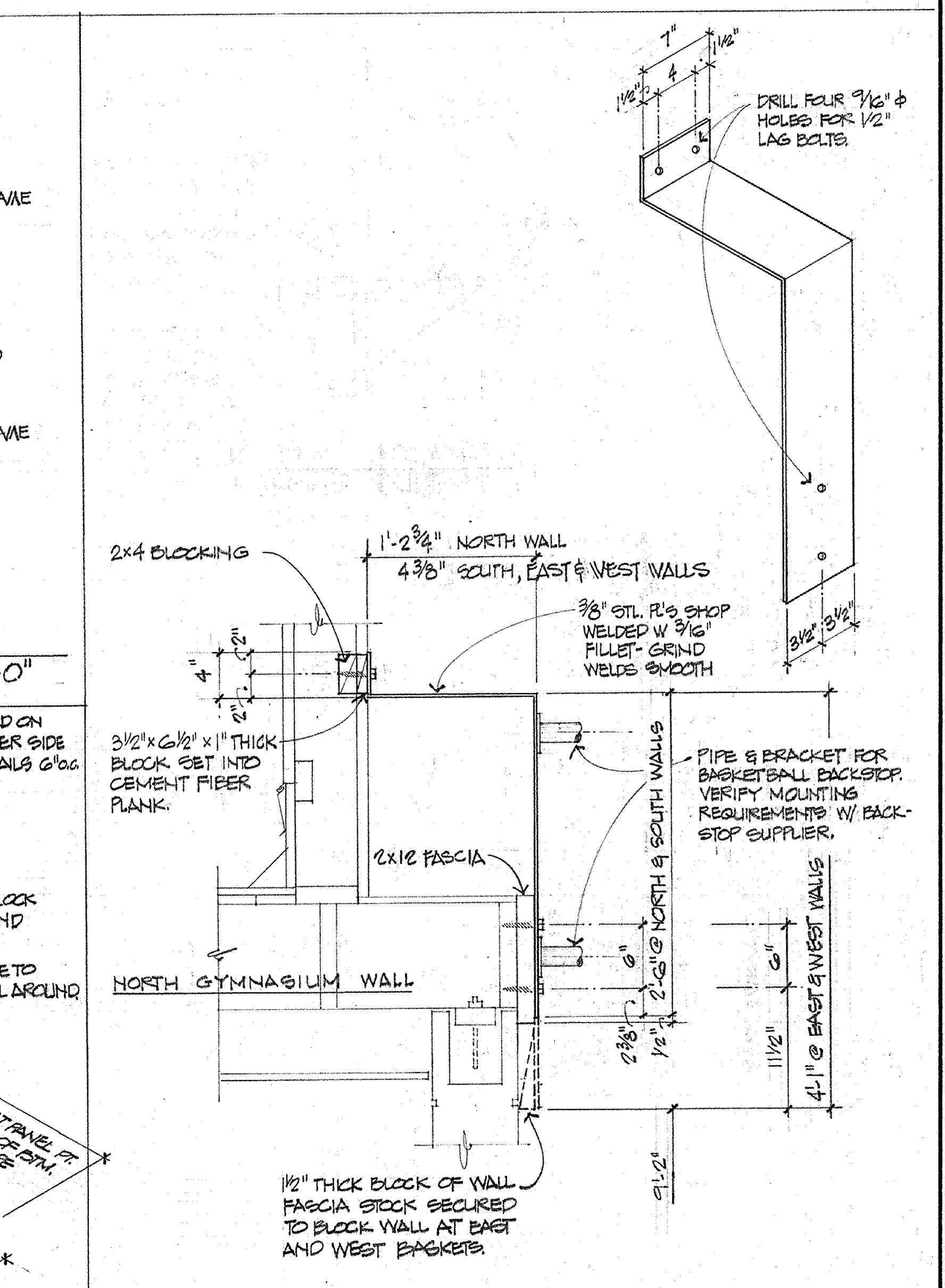
DRILL FOUR ¹³⁄₁₆" HOLES FOR ¾" LAG BOLTS
2x4 BLOCKING
1'-2¾" NORTH WALL
4'-3¾" SOUTH, EAST & WEST WALLS
⅜" STL PL'S SHOP WELDED W/ ⅜" FILLET-GRIND WELDS SMOOTH
3½" x 3½" x ⅜" THICK BLOCK SET INTO CEMENT FIBER PLANK.
2x12 FASCIA
NORTH GYMNASIUM WALL
PIPE & BRACKET FOR BASKETBALL BACKSTOP. VERIFY MOUNTING REQUIREMENTS W/ BACKSTOP SUPPLIER.
½" THICK BLOCK OF WALL FASCIA STOCK SECURED TO BLOCK WALL AT EAST AND WEST BACKERS

18/35 BASKETBALL BACKSTOP WALL MOUNTING BRACE 1"=1'-0"

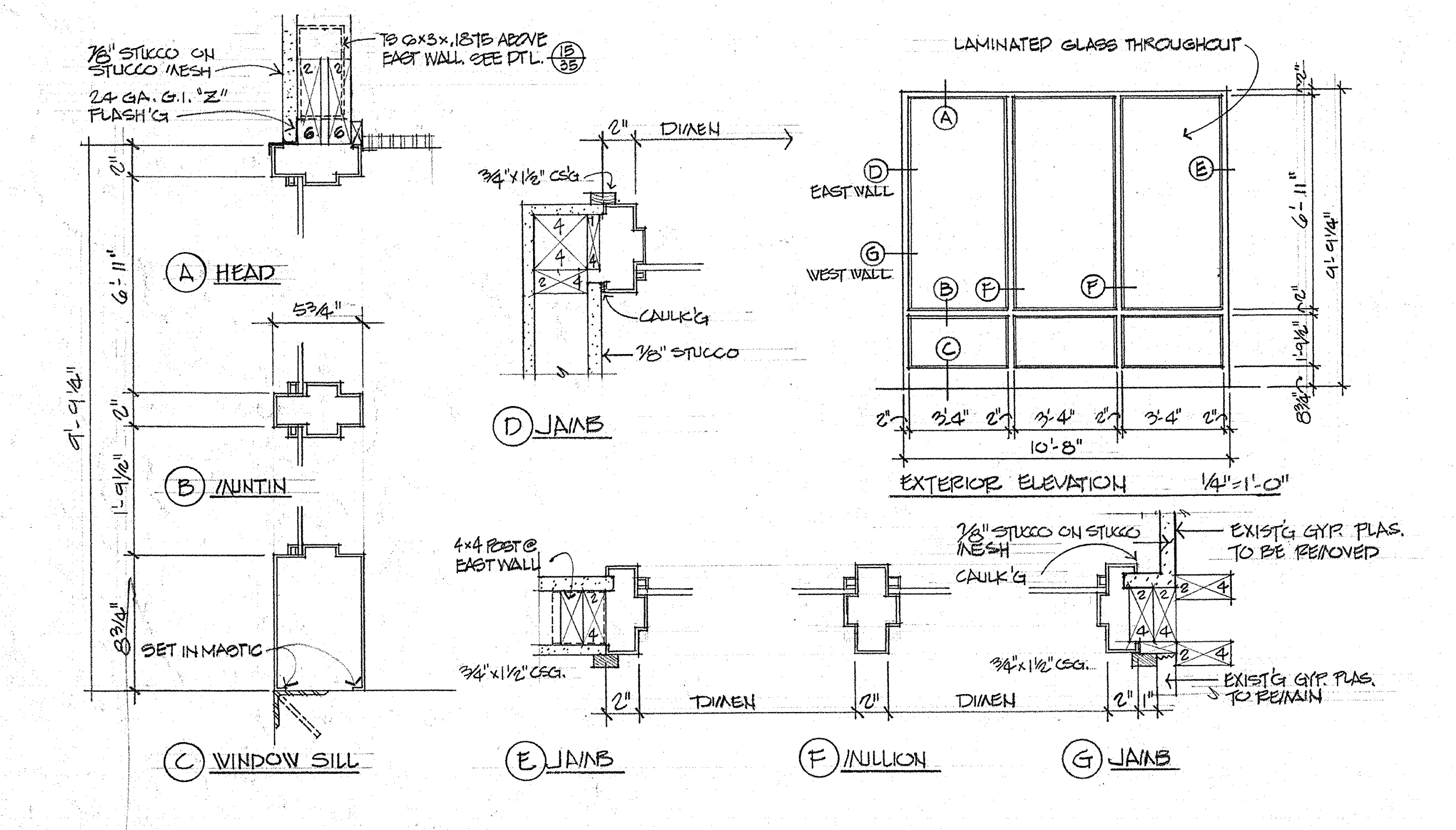
⅞" STUCCO ON STUCCO MESH
24 GA. G.I. "Z" FLASH'G
A HEAD
B MUNTIN
C WINDOW SILL
D JAMB
E JAMB
F MULLION
G JAMB
LAMINATED GLASS THROUGHOUT
EAST WALL
WEST WALL
CAULK'G
⅞" STUCCO
SET IN MASTIC
EXST'G GYP PLAS. TO BE REMOVED
EXST'G GYP PLAS. TO REMAIN
EXTERIOR ELEVATION ¼"=1'-0"

13/35 WINDOWS IN SMALL COURTYARD 1½"=1'-0"

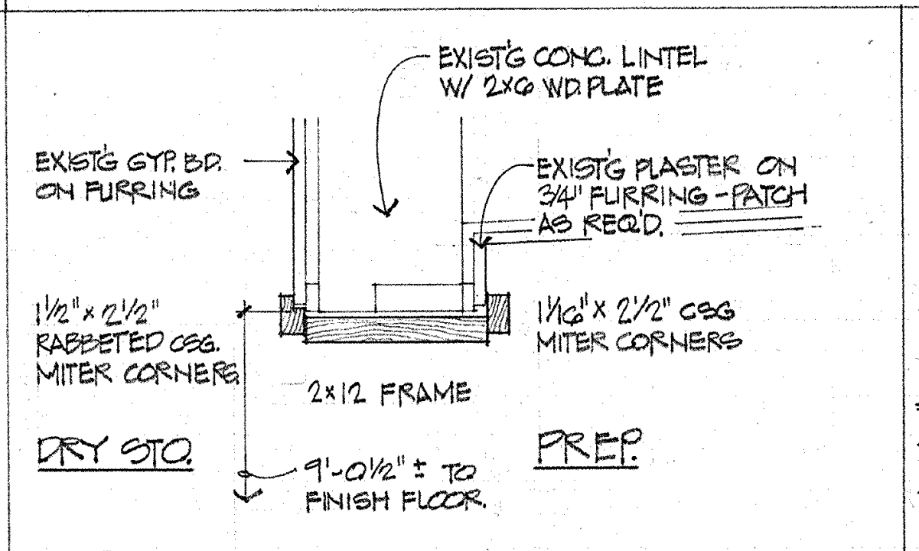
EXST'G CONC. LINTEL W/ 2x6 WD PLATE
EXST'G GYP. BD. ON FURRING
EXST'G PLASTER ON ¾" FURRING – PATCH AS REQ'D.
¾ x 1½" RABBETED CSG. MITER CORNERS
1½ x 2½" CSG MITER CORNERS
2x12 FRAME
DRY STO
PREP
7'-0½" ± TO FINISH FLOOR

14/35 HEAD WALL BETWEEN DRY STO. RM. D19 & PREP RM. D8 1"=1'-0"

JAMBS SIMILAR TO HEAD

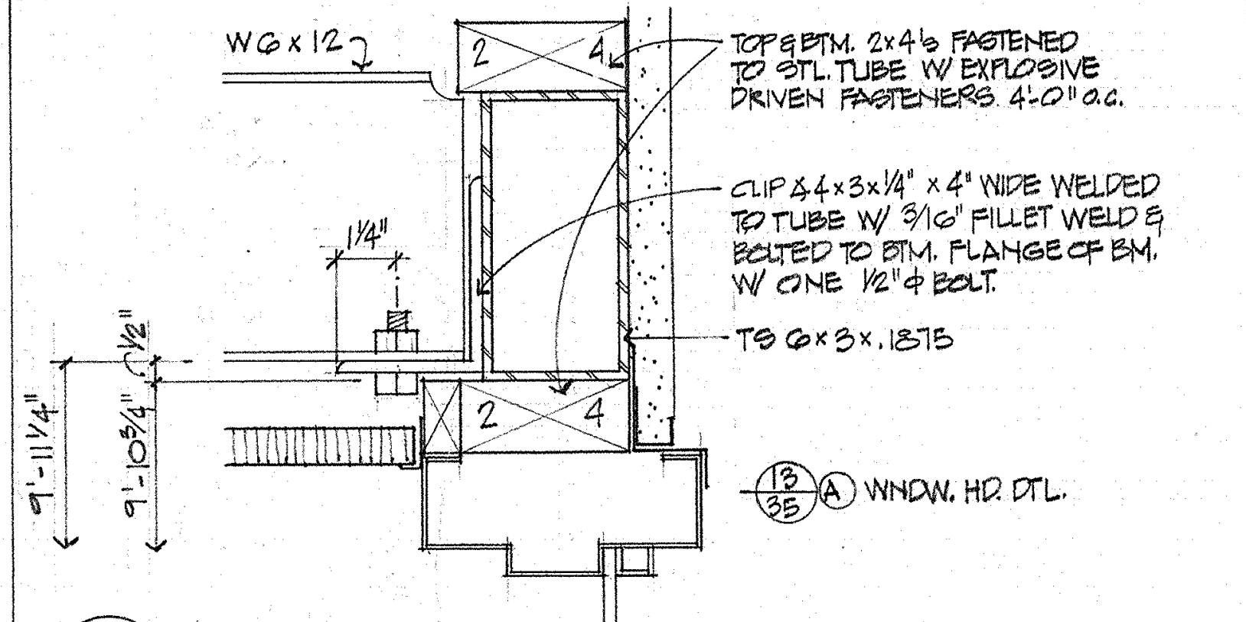
W6 x 12
TOP & BTM. 2x4's FASTENED TO STL TUBE W/ EXPLOSIVE DRIVEN FASTENERS 4'-0" o.c.
CLIP 6 x 3 x ¼" x 4" WIDE WELDED TO TUBE W/ 3/16" FILLET WELD & BOLTED TO BTM. FLANGE OF BM. W/ ONE ½" ∅ BOLT
TS 6 x 3 x .1875
WINDOW HD. DTL

15/35 STEEL BEAM TO STL. TUBE CONNECTION 3"=1'-0"

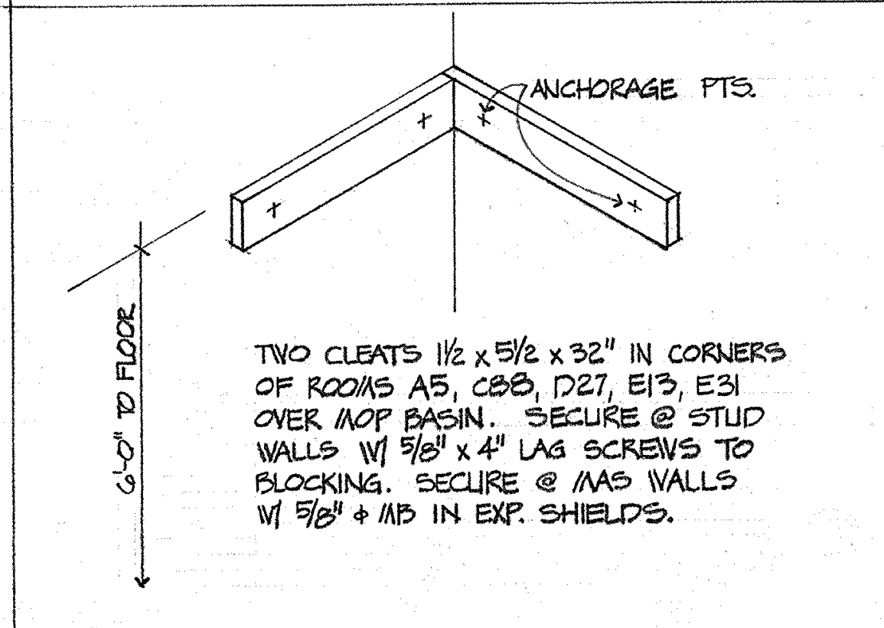
ANCHORAGE PTS.
TWO CLEATS 1½ x 5¼ x 32" IN CORNERS OF ROOMS A5, C8, D27, E13, E31 OVER MOP BASIN. SECURE @ STUD WALLS W/ ⅜" x 4" LAG SCREWS TO BLOCKING. SECURE @ MAS WALLS W/ ⅜" & INS IN EXP. SHIELDS.

16/35 CLEATS @ JAN. ROOMS

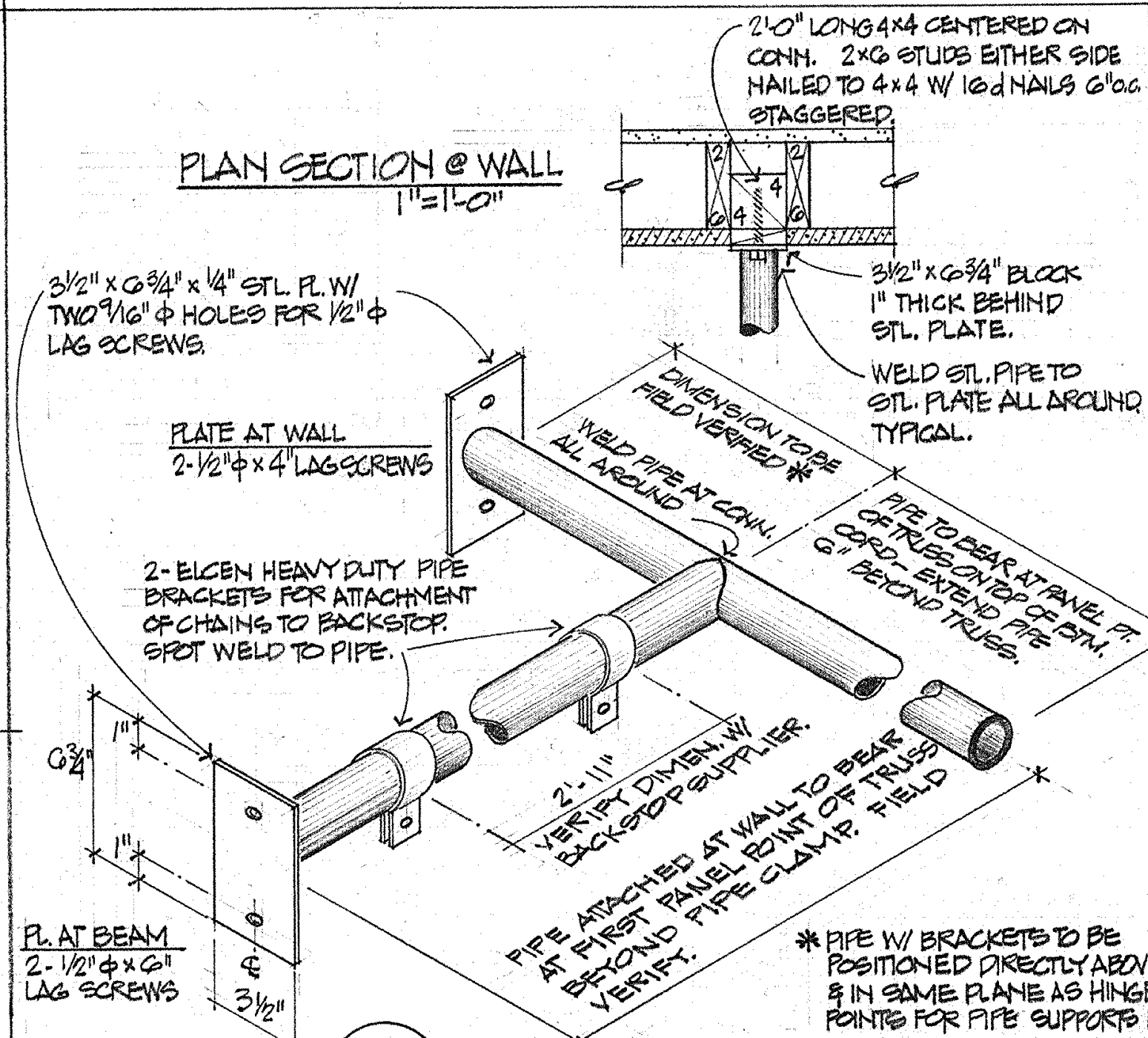
PLAN SECTION @ WALL 1"=1'-0"
2'-0" LONG 4x4 CENTERED ON CONN. 2x6 STUDS EITHER SIDE NAILED TO 4x4 W/ 16d NAILS 6" o.c. STAGGERED.
3½" x 6 ⅜" BLOCK 1" THICK BEHIND STL PLATE.
WELD STL PIPE TO STL PLATE ALL AROUND TYPICAL.
PLATE AT WALL
2-EUGEN HEAVY DUTY PIPE BRACKETS FOR ATTACHMENT OF CHAINS TO BACKSTOP. SHOP WELD TO PIPE.
PL AT BEAM 2-½" ∅ x 6" LAG SCREWS
PIPE ATTACHED AT WALL TO BEAM AT FIRST PANEL POINT OF TRUSS BEYOND PIPE CLAMP. FIELD VERIFY.
* PIPE W/ BRACKETS TO BE POSITIONED DIRECTLY ABOVE & IN SAME PLANE AS HINGE POINTS FOR PIPE SUPPORTS BELOW.

17/35 BASKETBALL BACKSTOP CHAIN MOUNTING AT CEILING

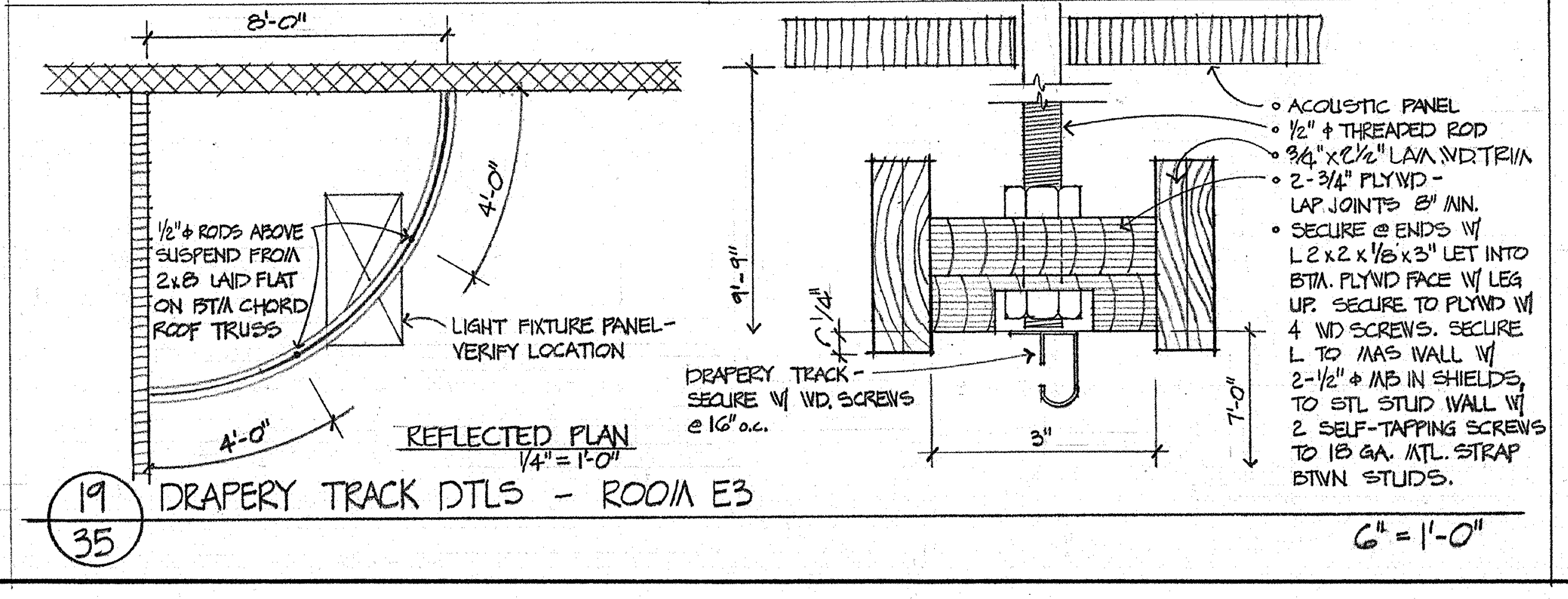
½" ∅ RODS ABOVE SUSPEND FROM 2x6 LAID FLAT ON BTM CHORD ROOF TRUSS
LIGHT FIXTURE PANEL – VERIFY LOCATION
REFLECTED PLAN ¼"=1'-0"
• ACOUSTIC PANEL
• ½" ∅ THREADED ROD
• ¾" x 2½" LAM. WD TRIM
• 2-¾" PLYWD – LAP JOINTS 6" MIN.
• SECURE @ ENDS W/ L 2 x 2 x ⅛ x 3" LET INTO BTM. PLYWD FACE W/ LEG UP. SECURE TO PLYWD W/ 4 WD SCREWS. SECURE L TO MAS WALL W/ 2-½" ∅ INS IN SHIELDS, TO STL STUD WALL W/ 2 SELF-TAPPING SCREWS TO 18 GA. STL STRAP BTWN STUDS.
DRAPERY TRACK SECURE W/ WD SCREWS 6" o.c.

19/35 DRAPERY TRACK DTLS – ROOM E3 6"=1'-0"

MISC. DETAILS

SWEET HOME HIGH SCHOOL
ADDITIONS AND ALTERATIONS 1974
DISTRICT 55 LINN COUNTY, OREGON

ARCHITECTS
HAMLIN, MARTIN,
SCHULTZ & GEYER
AIA
159 W. 12TH EUGENE, OREGON 97401

A
35
JOB NO.

REGISTERED ARCHITECT
CLARE K. HAMLIN
Clare K Hamlin
EUGENE, OREGON
STATE OF OREGON

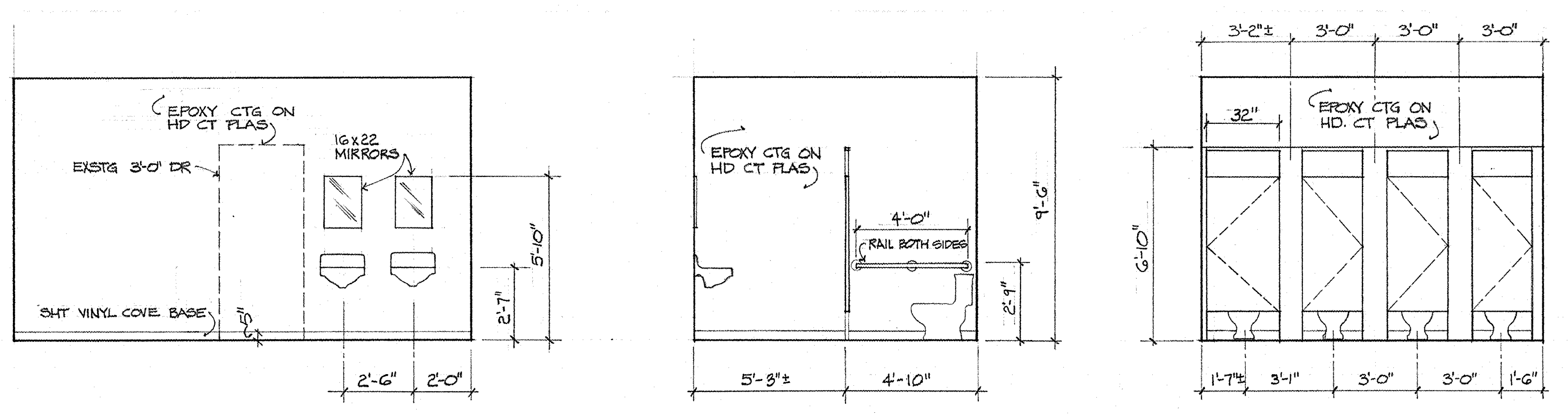
EPOXY CTG ON HD CT PLAS
EXSTG 3'-0" DR
16x22 MIRRORS
SHT VINYL COVE BASE
5"
2'-7"
5'-10"
2'-6"
2'-0"
EPOXY CTG ON HD CT PLAS
4'-0"
RAIL BOTH SIDES
9'-6"
2'-9"
5'-3"±
4'-10"
3'-2"±
3'-0"
3'-0"
3'-0"
32"
EPOXY CTG ON HD. CT PLAS
6'-10"
1'-7"±
3'-1"
3'-0"
3'-0"
1'-6"

1/36 GIRLS TOILET A4 1/4" = 1'-0"
WEST WALL A4 NORTH WALL A4 EAST WALL A4

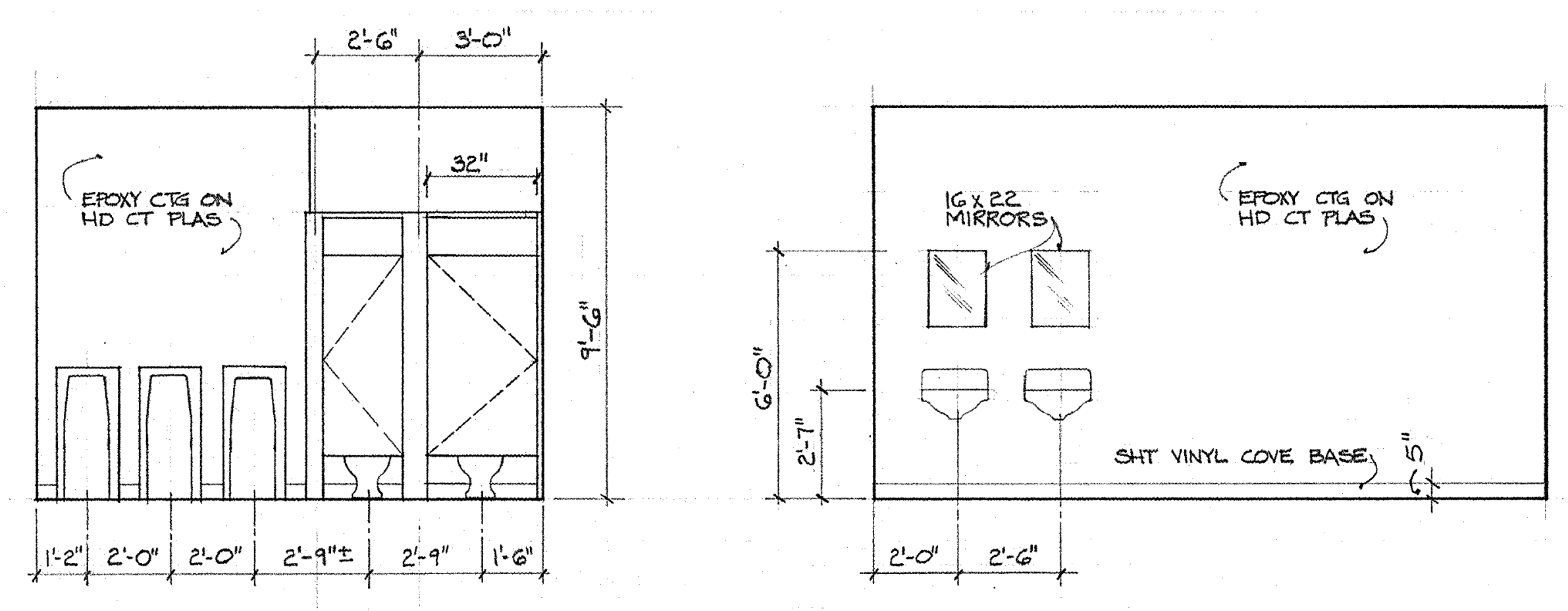
2'-6"
3'-0"
32"
EPOXY CTG ON HD CT PLAS
9'-6"
1'-2"
2'-0"
2'-0"
2'-9"±
2'-9"
1'-6"
16x22 MIRRORS
EPOXY CTG ON HD CT PLAS
6'-0"
2'-7"
SHT VINYL COVE BASE
5"
2'-0"
2'-6"

2/36 BOYS TOILET A6 1/4" = 1'-0"
WEST WALL A6 EAST WALL A6

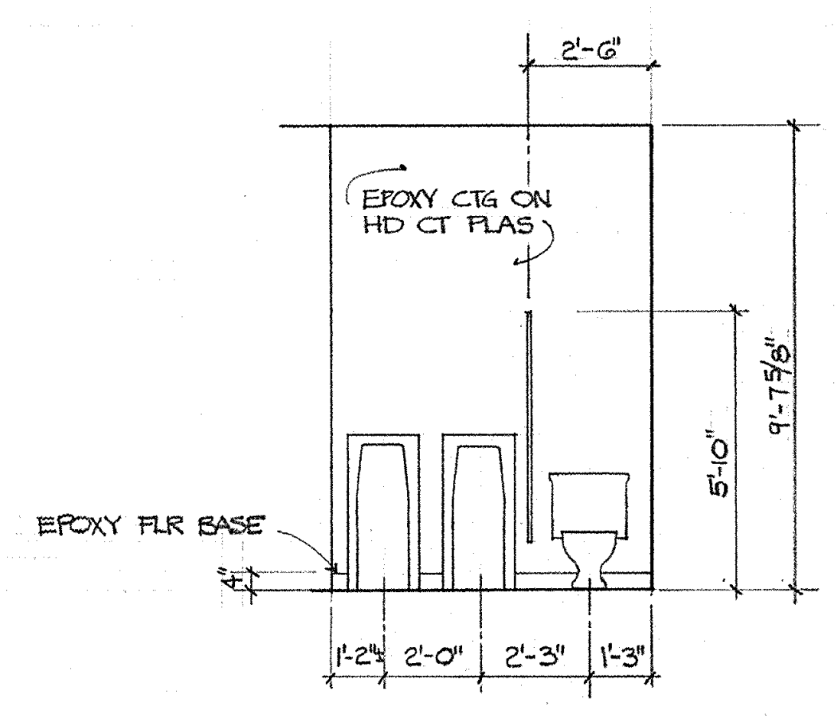
2'-6"
EPOXY CTG ON HD CT PLAS
EPOXY FLR BASE
4"
5'-10"
9'-7 5/8"
1'-2"
2'-0"
2'-3"
1'-3"

3/36 TOILET C58 1/4" = 1'-0"
WEST WALL

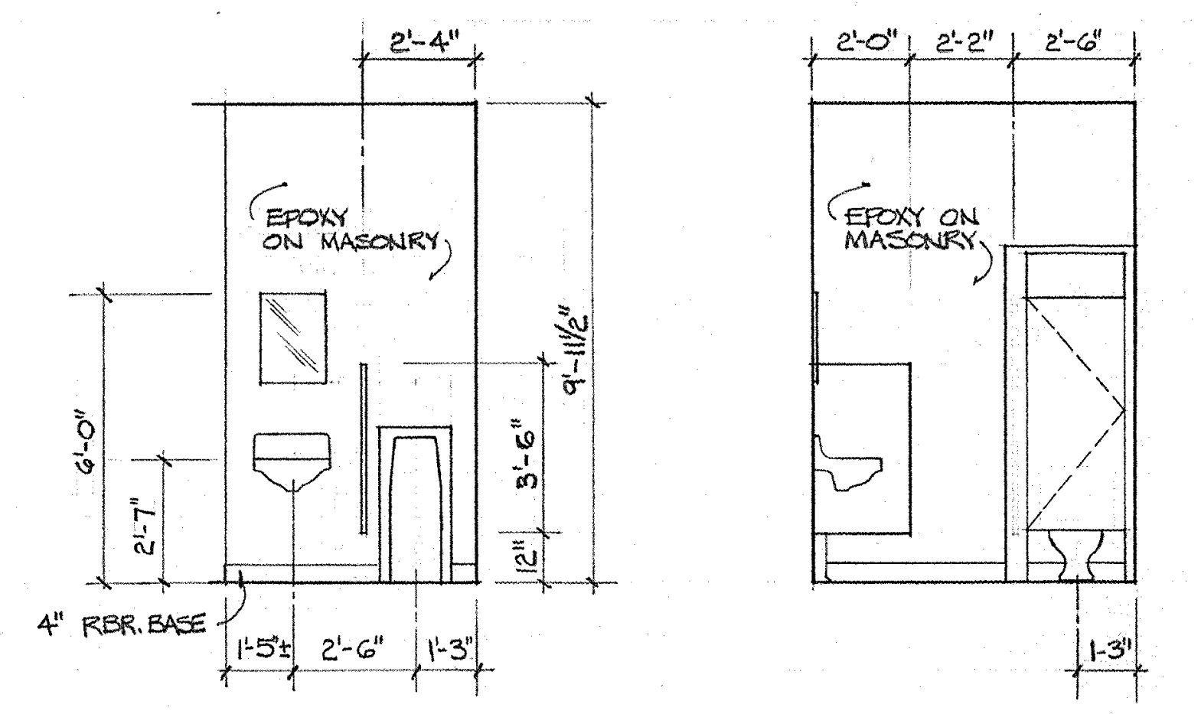
2'-4"
EPOXY ON MASONRY
6'-0"
2'-7"
3'-6"
9'-11 1/2"
12"
4" RBR. BASE
1'-5"±
2'-6"
1'-3"
2'-0"
2'-2"
2'-6"
EPOXY ON MASONRY
1'-3"

4/36 TOILET C66 1/4" = 1'-0"
WEST WALL NORTH WALL

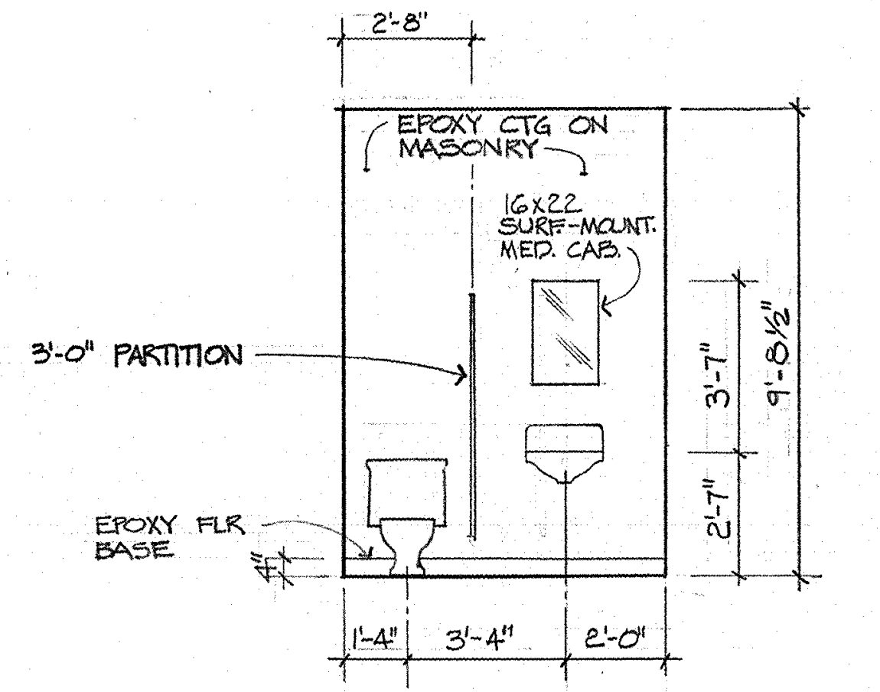
2'-8"
EPOXY CTG ON MASONRY
16x22 SURF-MOUNT. MED. CAB.
3'-0" PARTITION
EPOXY FLR BASE
3'-7"
2'-7"
9'-8 1/2"
1'-4"
3'-4"
2'-0"

5/36 SHOWER 1/4" = 1'-0"
PARTIAL WEST WALL C73

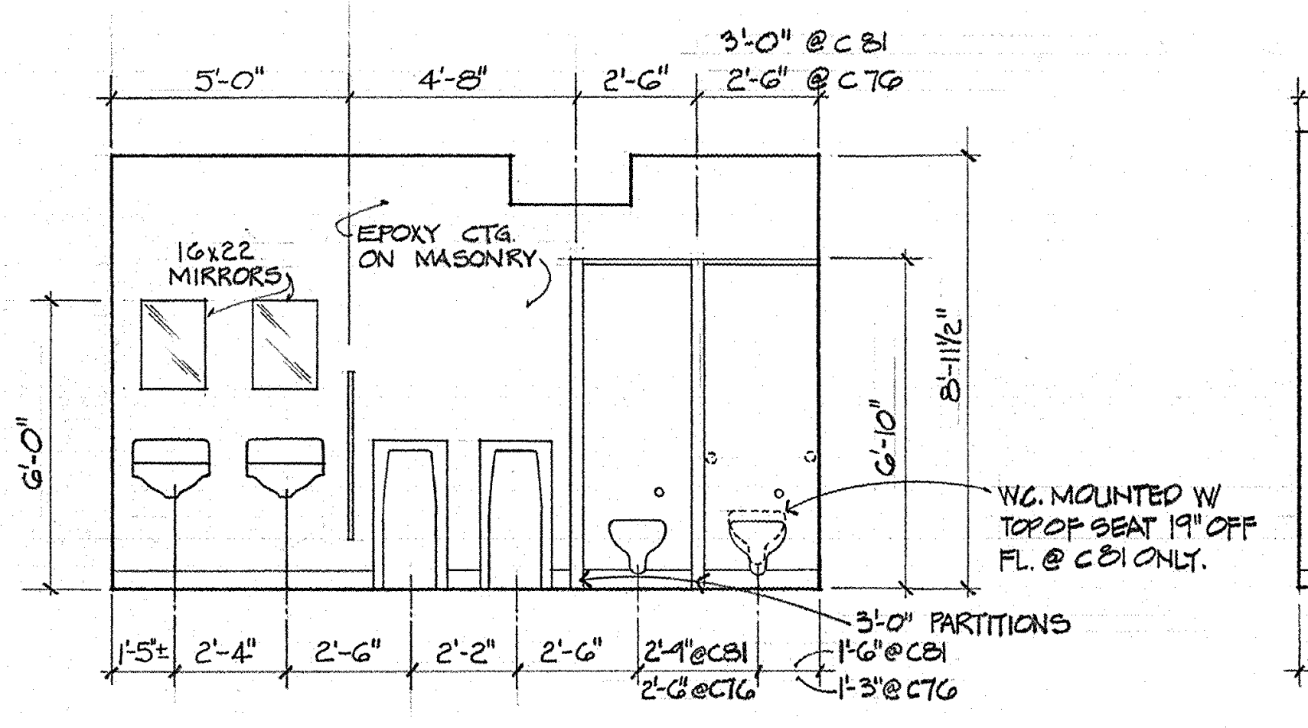
5'-0"
4'-8"
2'-6"
3'-0" @ C81
2'-6" @ C76
16x22 MIRRORS
EPOXY CTG. ON MASONRY
6'-0"
6'-10"
8'-11 1/2"
W.C. MOUNTED W/ TOP OF SEAT 19" OFF FL. @ C81 ONLY.
3'-0" PARTITIONS
1'-5"±
2'-4"
2'-6"
2'-2"
2'-6"
2'-9"@C81
2'-6"@C76
1'-6"@C81
1'-3"@C76

6/36 TOILETS 1/4" = 1'-0"
WEST WALL C76 EAST WALL C81 SIM.

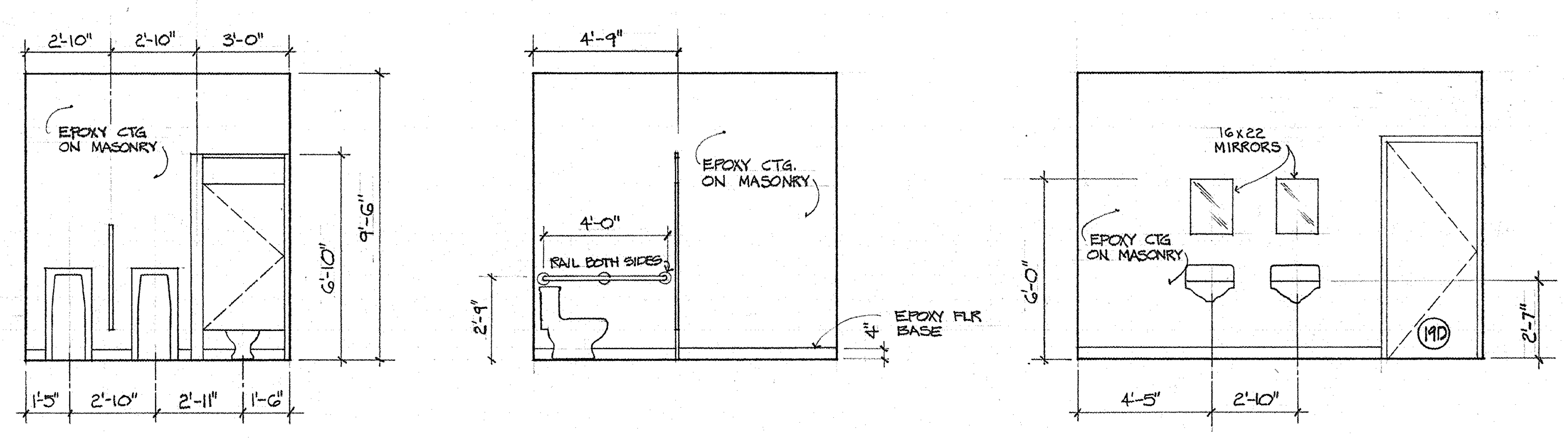
2'-10"
2'-10"
3'-0"
EPOXY CTG ON MASONRY
6'-10"
9'-6"
1'-5"
2'-10"
2'-11"
1'-6"
4'-9"
4'-0"
RAIL BOTH SIDES
EPOXY CTG. ON MASONRY
EPOXY FLR BASE
2'-9"
4"
16x22 MIRRORS
EPOXY CTG ON MASONRY
6'-0"
2'-7"
19D
4'-5"
2'-10"

7/36 BOYS TOILET D28 1/4" = 1'-0"
WEST WALL D28 NORTH WALL D28 EAST WALL D28

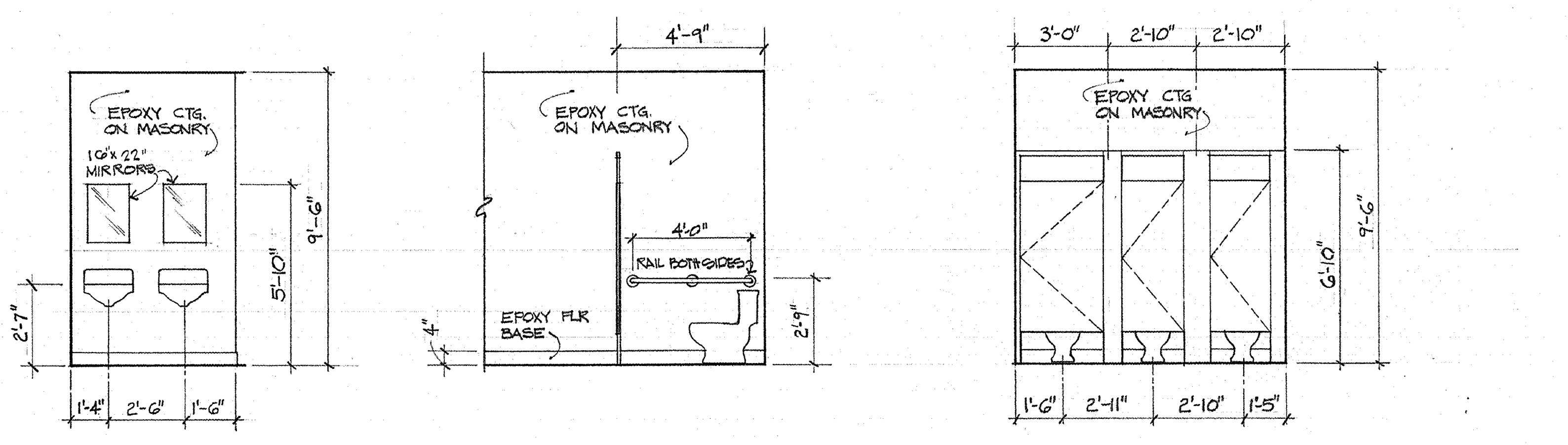
EPOXY CTG. ON MASONRY
16"x22" MIRRORS
2'-7"
5'-10"
9'-6"
1'-4"
2'-6"
1'-6"
4'-9"
EPOXY CTG. ON MASONRY
4'-0"
RAIL BOTH SIDES
EPOXY FLR BASE
4"
2'-9"
3'-0"
2'-10"
2'-10"
EPOXY CTG ON MASONRY
6'-10"
9'-6"
1'-6"
2'-11"
2'-10"
1'-5"

8/36 GIRLS TOILET D29 1/4" = 1'-0"
PARTIAL WEST WALL D29 PARTIAL NORTH WALL D29 EAST WALL D29

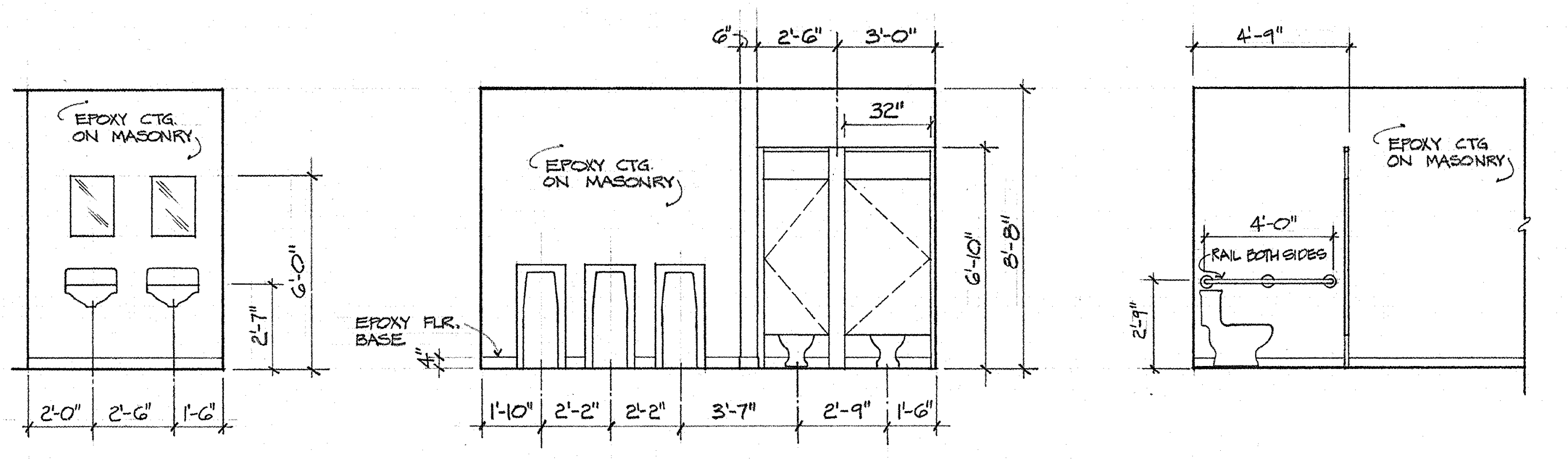
EPOXY CTG. ON MASONRY
2'-7"
6'-0"
2'-0"
2'-6"
1'-6"
6"
2'-6"
3'-0"
32"
EPOXY CTG. ON MASONRY
EPOXY FLR. BASE
4"
6'-10"
8'-8"
1'-10"
2'-2"
2'-2"
3'-7"
2'-9"
1'-6"
4'-9"
4'-0"
RAIL BOTH SIDES
EPOXY CTG ON MASONRY
2'-9"

9/36 BOYS TOILET E30 - E15 SIMILAR 1/4" = 1'-0"
PARTIAL SOUTH WALL E30 NORTH WALL E30 PARTIAL EAST WALL E30

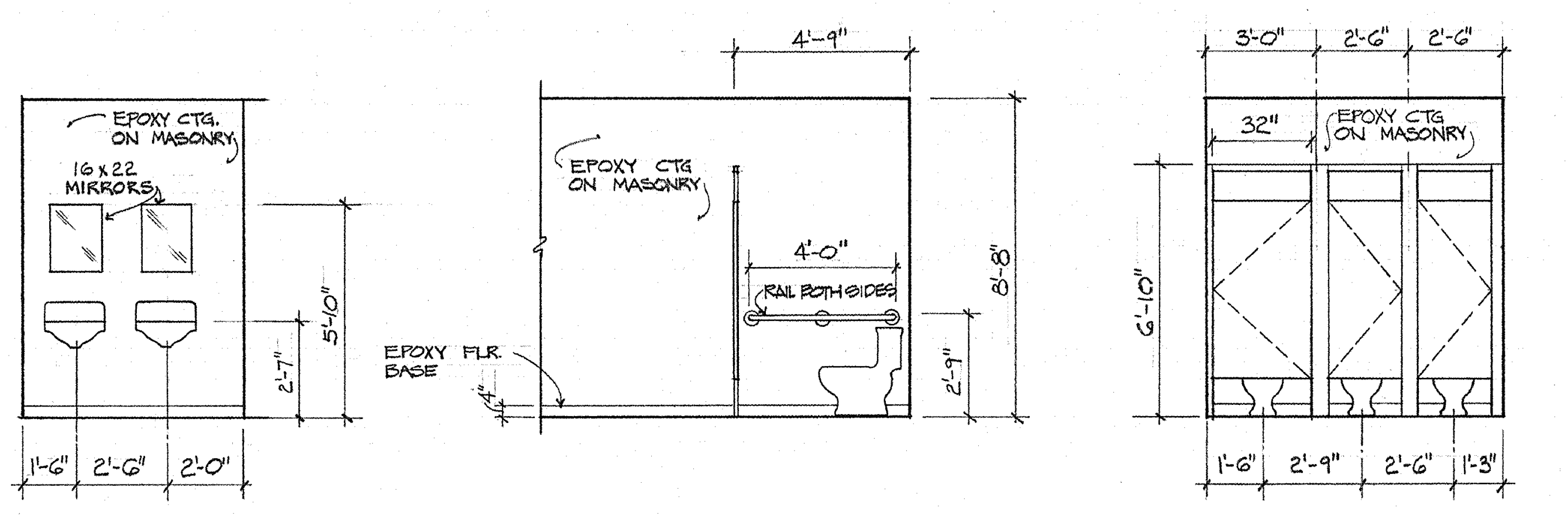
EPOXY CTG. ON MASONRY
16x22 MIRRORS
2'-7"
5'-10"
1'-6"
2'-6"
2'-0"
4'-9"
EPOXY CTG ON MASONRY
4'-0"
RAIL BOTH SIDES
EPOXY FLR. BASE
4"
2'-9"
8'-8"
3'-0"
2'-6"
2'-6"
32"
EPOXY CTG ON MASONRY
6'-10"
1'-6"
2'-9"
2'-6"
1'-3"

10/36 GIRLS TOILET E32 - E12 SIMILAR 1/4" = 1'-0"
PARTIAL NORTH WALL E32 PARTIAL EAST WALL E32 SOUTH WALL E32

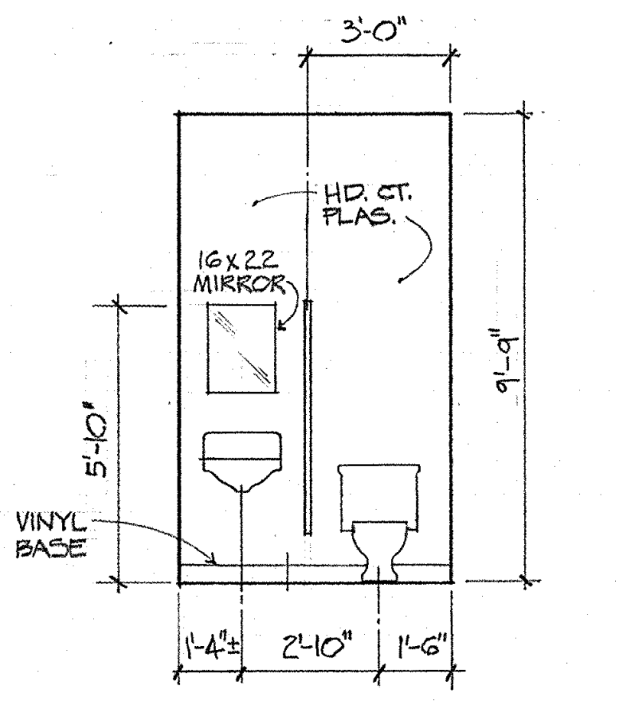
3'-0"
HD. CT. PLAS.
16x22 MIRROR
5'-10"
9'-9"
SHT. VINYL FLR. BASE
1'-4"±
2'-10"
1'-6"

11/36 TOILET E5 1/4"=1'-0"
SOUTH WALL E5

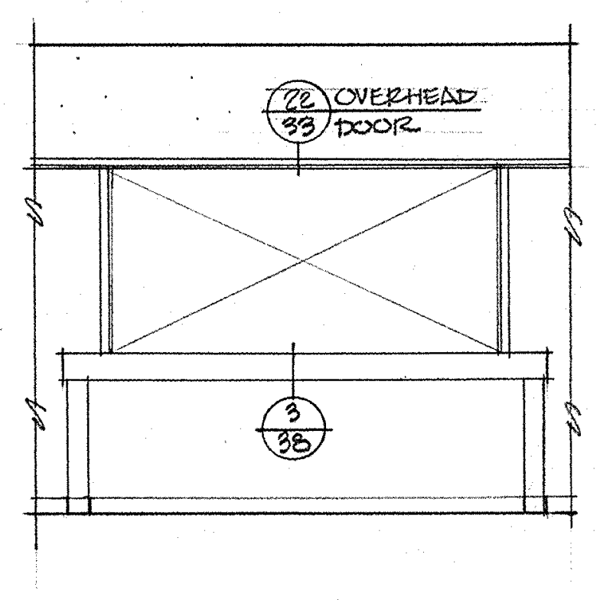
22/33 OVERHEAD DOOR
3/38

12/36 CONCESSION B9
NORTH WALL B9 1/4"=1'-0"

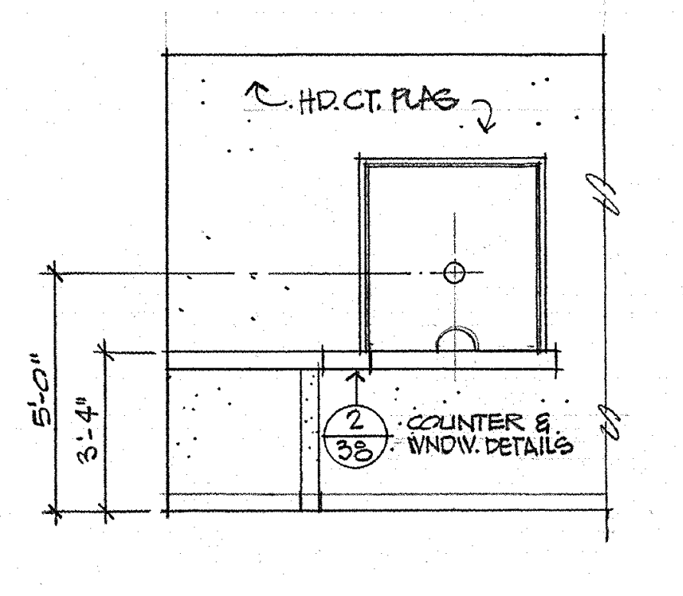
HD.CT. PLAS
5'-0"
3'-4"
2/38 COUNTER & WNDW. DETAILS

13/36 TICKET OFF. A1
WEST WALL A1 1/4"=1'-0"

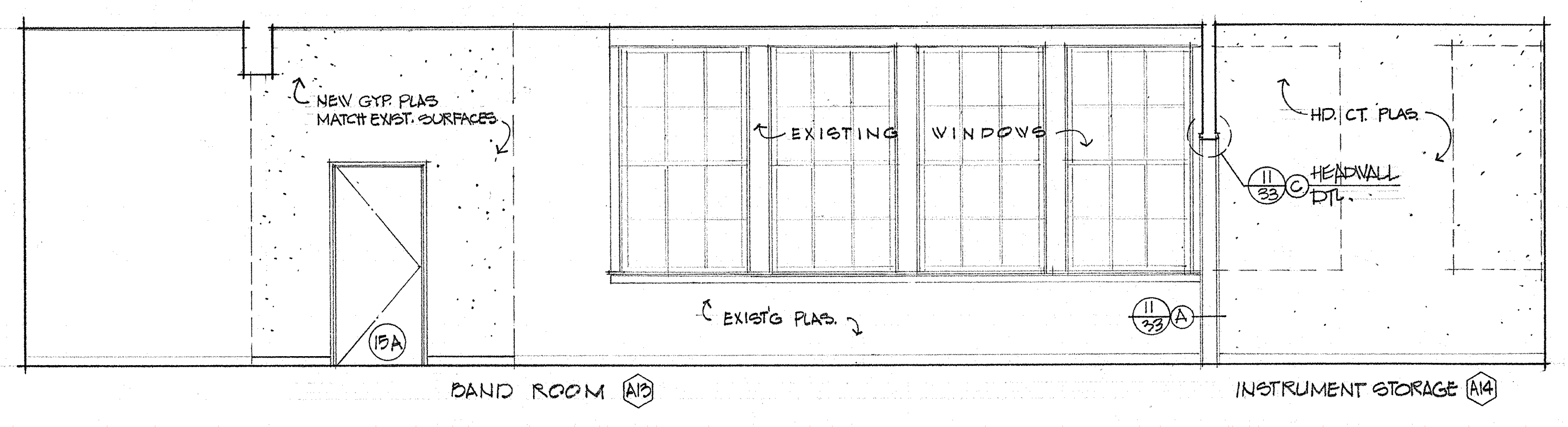
NEW GYP. PLAS MATCH EXIST. SURFACES
EXISTING WINDOWS
HD. CT. PLAS
11/33 C HEADWALL DTL.
15A
EXIST'G PLAS.
11/33 A
BAND ROOM A13
INSTRUMENT STORAGE A14

14/36 BAND ROOM A13 1/4"=1'-0"
EAST WALL

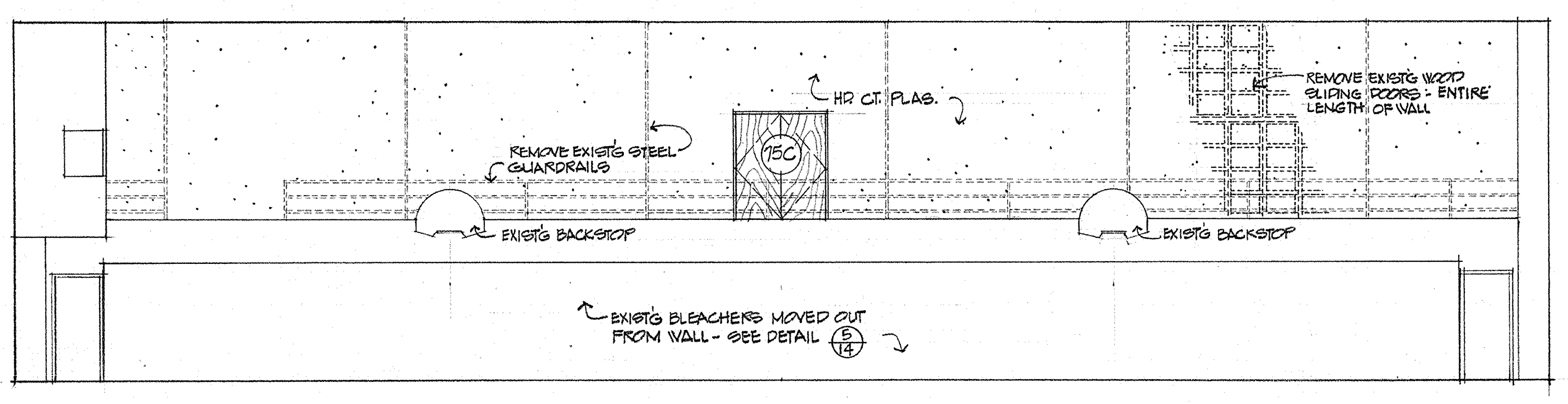
HD. CT. PLAS.
REMOVE EXIST'G WOOD SLIDING DOORS - ENTIRE LENGTH OF WALL
REMOVE EXIST'G STEEL GUARDRAILS
15C
EXIST'G BACKSTOP
EXIST'G BACKSTOP
EXIST'G BLEACHERS MOVED OUT FROM WALL - SEE DETAIL 5/14

15/36 EXISTING GYMNASIUM C31 1/8"=1'-0"
SOUTH WALL C31

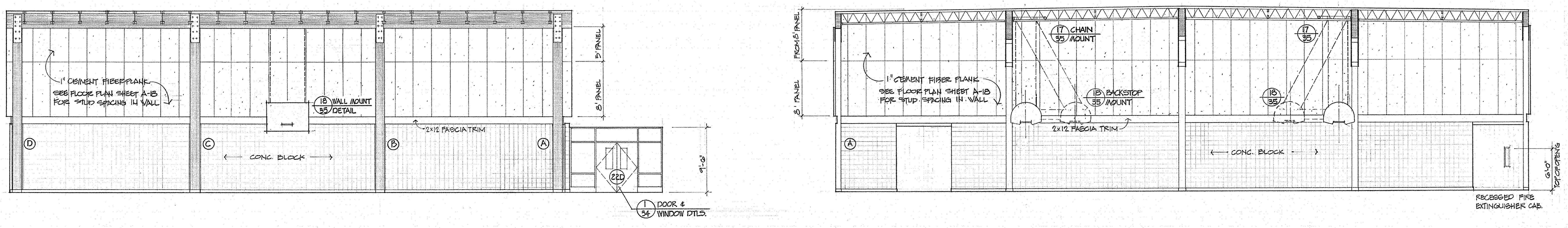
1" CEMENT FIBER PLANK SEE FLOOR PLAN SHEET A-18 FOR STUD SPACING IN WALL
18/35 WALL MOUNT DETAIL
3' PANEL
8' PANEL
2x12 FASCIA TRIM
D
C
B
A
CONC. BLOCK
22D
9'-0"
1/34 DOOR & WINDOW DTLS.
FROM 3' PANEL
8' PANEL
1" CEMENT FIBER PLANK SEE FLOOR PLAN SHEET A-18 FOR STUD SPACING IN WALL
17/35 CHAIN MOUNT
17/35
18/35 BACKSTOP MOUNT
18/35
2x12 FASCIA TRIM
A
CONC. BLOCK
6'-0" TOP OF OPEN'G
RECESSED FIRE EXTINGUISHER CAB.

16/36 P.E. GYMNASIUM D31 1/8"=1'-0"
WEST ELEVATION, EAST ELEVATION SIMILAR D31 NORTH ELEVATION, SOUTH ELEVATION SIMILAR D31

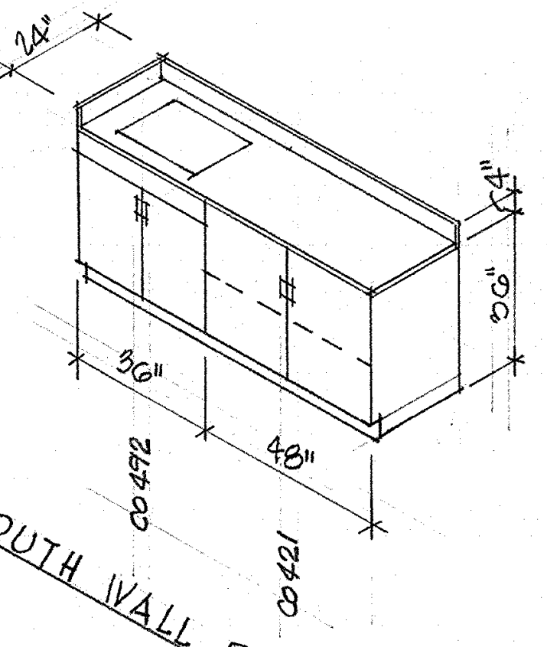
24"
4"
36"
36"
48"
CO 492
CO 421

A-36 SOUTH WALL RM B9

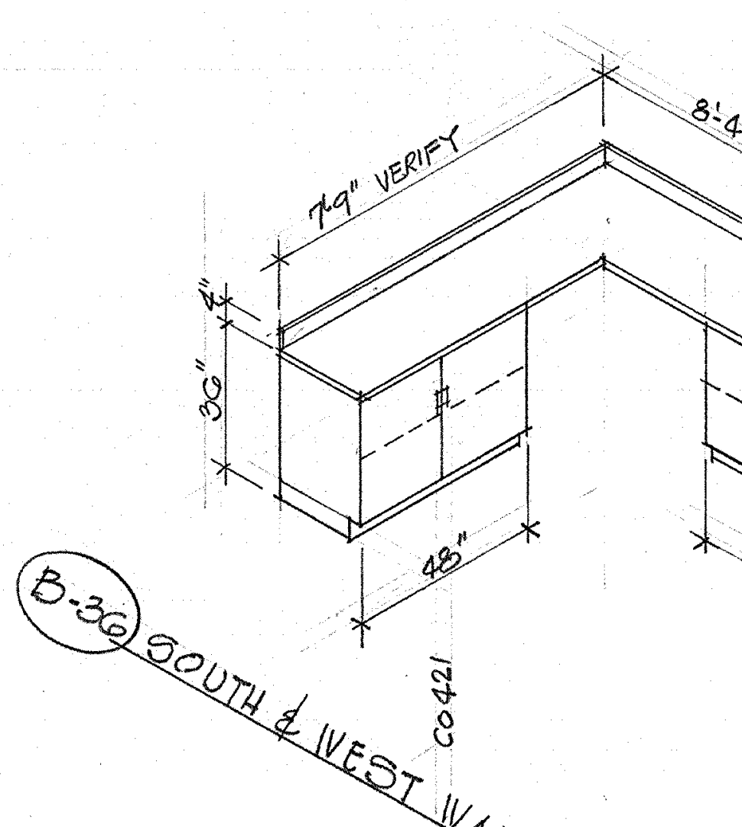
7'-9" VERIFY
8'-4" VERIFY
4"
36"
24"
48"
48"
CO 421
CO 421

B-36 SOUTH & WEST WALLS RM C2

INTERIOR ELEVATIONS
SWEET HOME HIGH SCHOOL
ADDITIONS AND ALTERATIONS 1974
DISTRICT 55 LINN COUNTY, OREGON

ARCHITECTS
HAMLIN, MARTIN,
SCHULTZ & GEYER AIA
159 W. 12TH EUGENE, OREGON 97401

A
36
JOB NO.

REGISTERED ARCHITECT
CLARE K. HAMLIN
Clare K Hamlin
EUGENE, OREGON
STATE OF OREGON

A-37 SOUTH WALL ROOM E3
B-37 NORTH WALL ROOM E3
C-37 SOUTH WALL ROOM E2 ~ NORTH WALL OPPOSITE
D-37 WEST WALL ROOM E2 (DEMONSTRATION UNITS)
E-37 SOUTHEAST CORNER ROOM E7
F-37 NORTH WALL ROOM E8
G-37 EAST WALL ROOM E22
H-37 UNASSIGNED
J-37 EAST WALL ROOM E21
K-37 LIBRARY CIRCULATION DESK
L-37 WEST WALL RM E17
M-37 WEST WALL RM E17
N-37 NORTH & SOUTH WALLS ROOM E49
O-37 WEST WALL RM E48 ~ EAST WALL RM E37
P-37 EAST WALL RM E47
Q-37 TYP STATION RM E47
R-37 WEST WALL RM E47
S-37 EAST WALL RM E47
T-37 DEMONSTRATION UNIT (RIGHT OR LEFT HAND SINK ~ SEE PLAN)
U-37 WEST WALL RMS E39 & E41
V-37 EAST & WEST WALLS RM E40
W-37 SOUTH WALL RM E43
X-37 SOUTH & WEST WALLS E42
Y-37 WEST WALL RM E44
Z-37 PIGEON HOLE UNITS
AA-37 TEACHERS' CASE
BB-37 TEACHERS' CASE W/ ADDED PIGEON HOLE UNIT
CC-37 SOUTH WALL ROOM E26
DD-37 EAST WALL RM E28
EE-37 EAST WALL RM E28
FF-37 WEST WALL RM E28
GG-37 WEST WALL ROOM E34
HH-37 NO WALL RM C48
JJ-37 WEST WALL RM C67

COUNTER TOPS & SPLASHES

ASSEMBLIES N-37 THRU V-37 — LABORATORY TYPE TOPS COMPLETE W/ SINKS

ASSEMBLIES W-37 THRU Y-37 — ACID RESISTANT LAMINATED PLASTIC

ALL OTHER ASSEMBLIES — STD LAMINATED PLASTIC

SHELVES

ALL SHELVES TO BE ADJUSTABLE

FIXED EQUIPMENT

SWEET HOME HIGH SCHOOL
ADDITIONS AND ALTERATIONS 1974
DISTRICT 55 LINN COUNTY, OREGON

ARCHITECTS
HAMLIN, MARTIN,
SCHULTZ & GEYER
AIA
159 W. 12TH EUGENE, OREGON 97401

A
37
JOB NO.

CLARE K. HAMLIN
Clare K Hamlin
EUGENE, OREGON

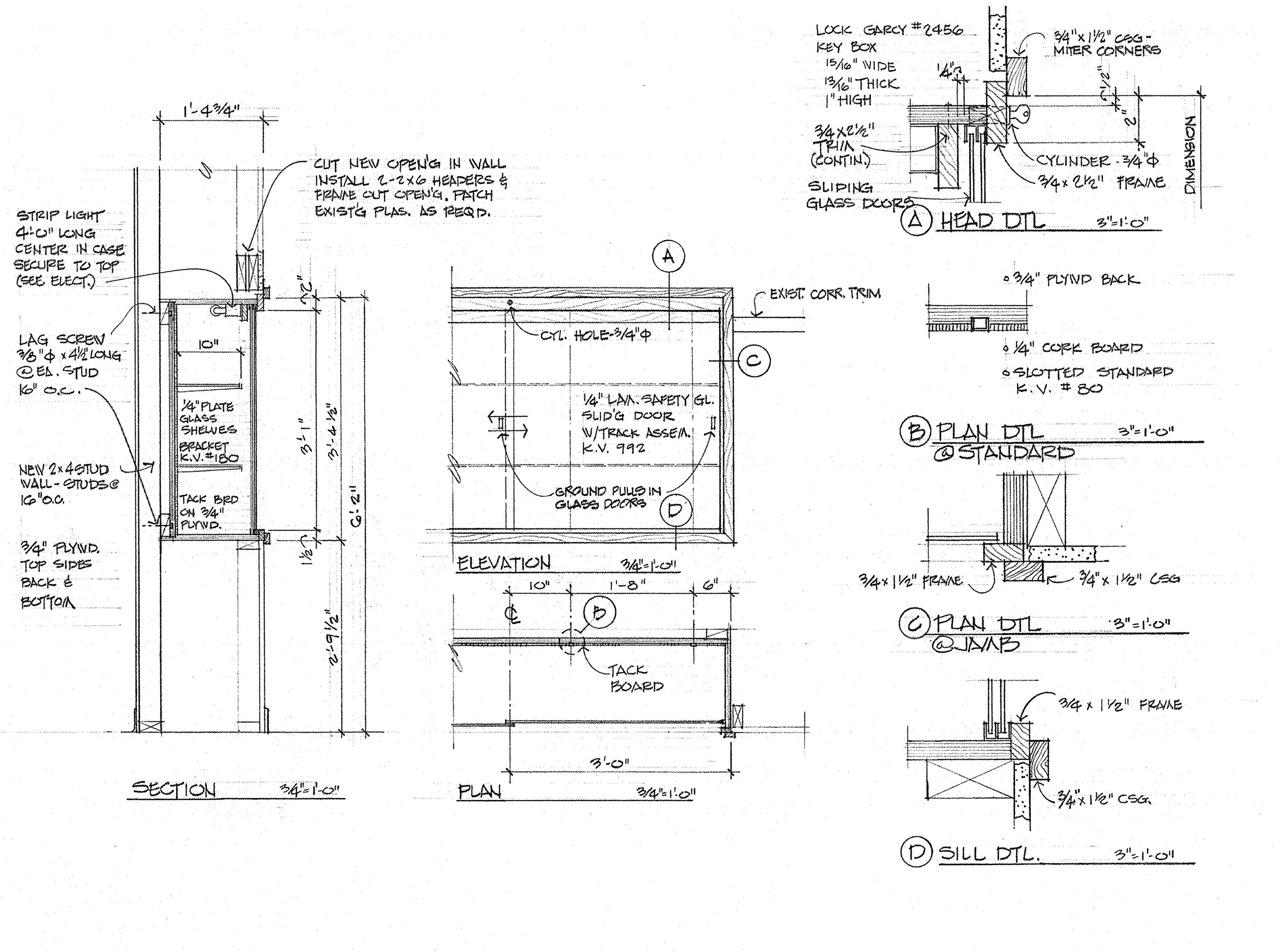
1'-4¾"
CUT NEW OPEN'G IN WALL INSTALL 2-2x6 HEADERS & FRAME OUT OPEN'G. PATCH EXIST'G PLAS. AS REQ'D.
STRIP LIGHT 4'-0" LONG CENTER IN CASE SECURE TO TOP (SEE ELECT.)
LAG SCREW ⅜"Φ x 4½" LONG @ EA. STUD 16" O.C.
10"
¼" PLATE GLASS SHELVES BRACKET K.V. #180
NEW 2x4 STUD WALL - STUDS @ 16" O.C.
TACK BRD ON ¾" PLYWD.
¾" PLYWD. TOP SIDES BACK & BOTTOM
3'-1"
3'-4½"
6'-2"
1½"
2'-9½"
SECTION ¾"=1'-0"
A
EXIST. CORR. TRIM
CYL. HOLE-¾"Φ
C
¼" LAM. SAFETY GL. SLID'G DOOR W/TRACK ASSEM. K.V. 992
GROUND PULLS IN GLASS DOORS
D
ELEVATION ¾"=1'-0"
10"
1'-8"
6"
B
TACK BOARD
3'-0"
PLAN ¾"=1'-0"
LOCK GARCY #2456 KEY BOX 15/16" WIDE 13/16" THICK 1" HIGH
¾ x 2½" TRIM (CONTIN.)
SLIDING GLASS DOORS
¼"
¾" x 1½" CSG - MITER CORNERS
½"
2"
CYLINDER - ¾"Φ
¾ x 2½" FRAME
DIMENSION
A HEAD DTL 3"=1'-0"
• ¾" PLYWD BACK
• ¼" CORK BOARD
• SLOTTED STANDARD K.V. #80
B PLAN DTL @ STANDARD 3"=1'-0"
¾ x 1½" FRAME
¾" x 1½" CSG
C PLAN DTL @ JAMB 3"=1'-0"
¾ x 1½" FRAME
¾" x 1½" CSG.
D SILL DTL. 3"=1'-0"

1/38 DISPLAY CASE

SCALE AS NOTED

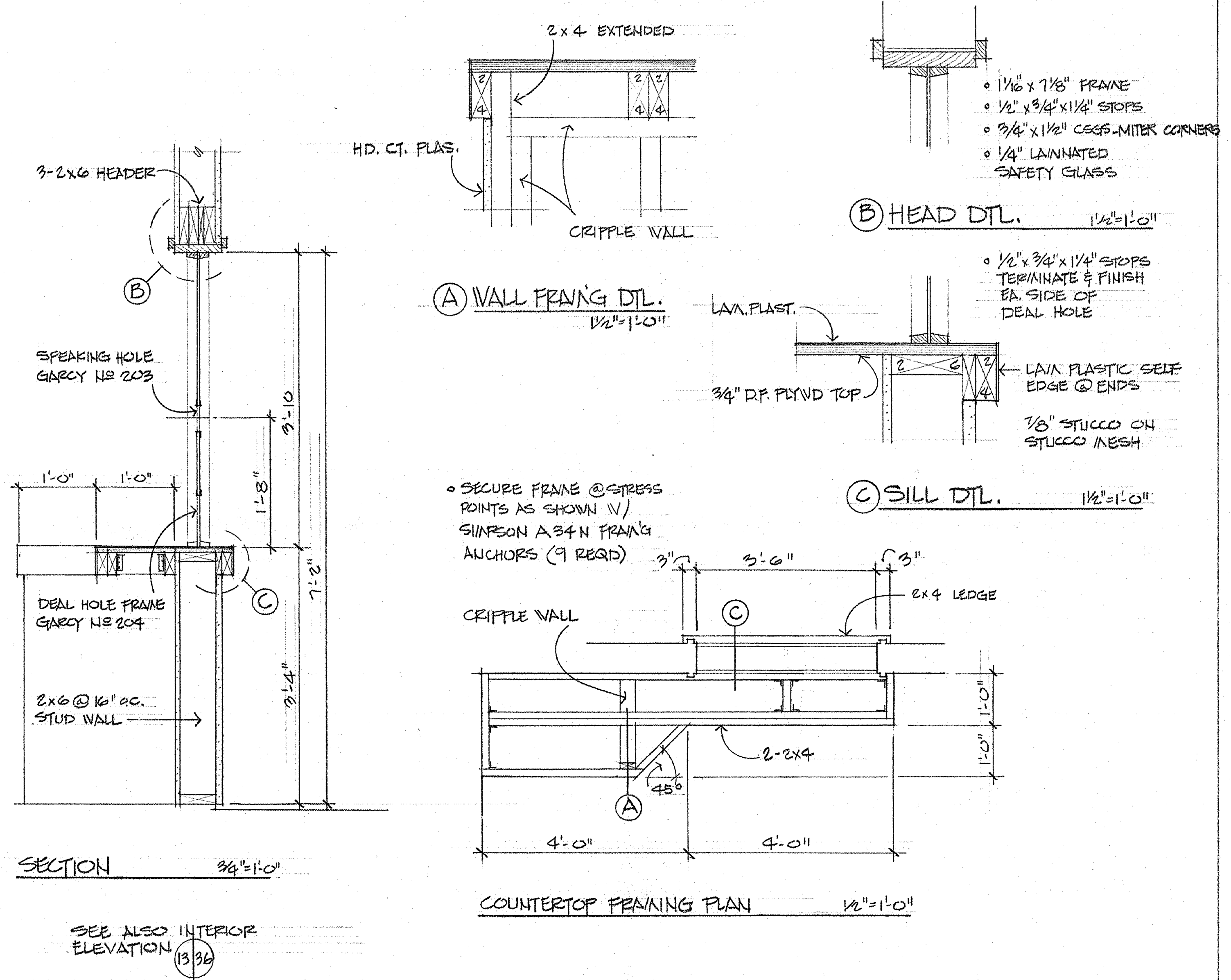
3-2x6 HEADER
B
SPEAKING HOLE GARCY № 203
1'-0"
1'-0"
3'-10
1'-8"
7'-2"
DEAL HOLE FRAME GARCY № 204
C
2x6 @ 16" o.c. STUD WALL
3'-4"
SECTION ¾"=1'-0"
SEE ALSO INTERIOR ELEVATION 13/36
2x4 EXTENDED
HD. CT. PLAS.
CRIPPLE WALL
A WALL FRAM'G DTL. 1½"=1'-0"
• 1⅛" x 7⅛" FRAME
• ½" x ¾" x 1¼" STOPS
• ¾" x 1½" CSGS.-MITER CORNERS
• ¼" LAMINATED SAFETY GLASS
B HEAD DTL. 1½"=1'-0"
• ½" x ¾" x 1¼" STOPS TERMINATE & FINISH EA. SIDE OF DEAL HOLE
LAM. PLAST.
¾" D.F. PLYWD TOP
LAM PLASTIC SELF EDGE @ ENDS
⅞" STUCCO ON STUCCO MESH
C SILL DTL. 1½"=1'-0"
• SECURE FRAME @ STRESS POINTS AS SHOWN W/ SIMPSON A34N FRAM'G ANCHORS (9 REQ'D)
3"
3'-6"
3"
2x4 LEDGE
C
CRIPPLE WALL
2-2x4
45°
A
1'-0"
1'-0"
4'-0"
4'-0"
COUNTERTOP FRAMING PLAN ½"=1'-0"

2/38 TICKET OFFICE WINDOW & COUNTERTOP

SCALE AS NOTED

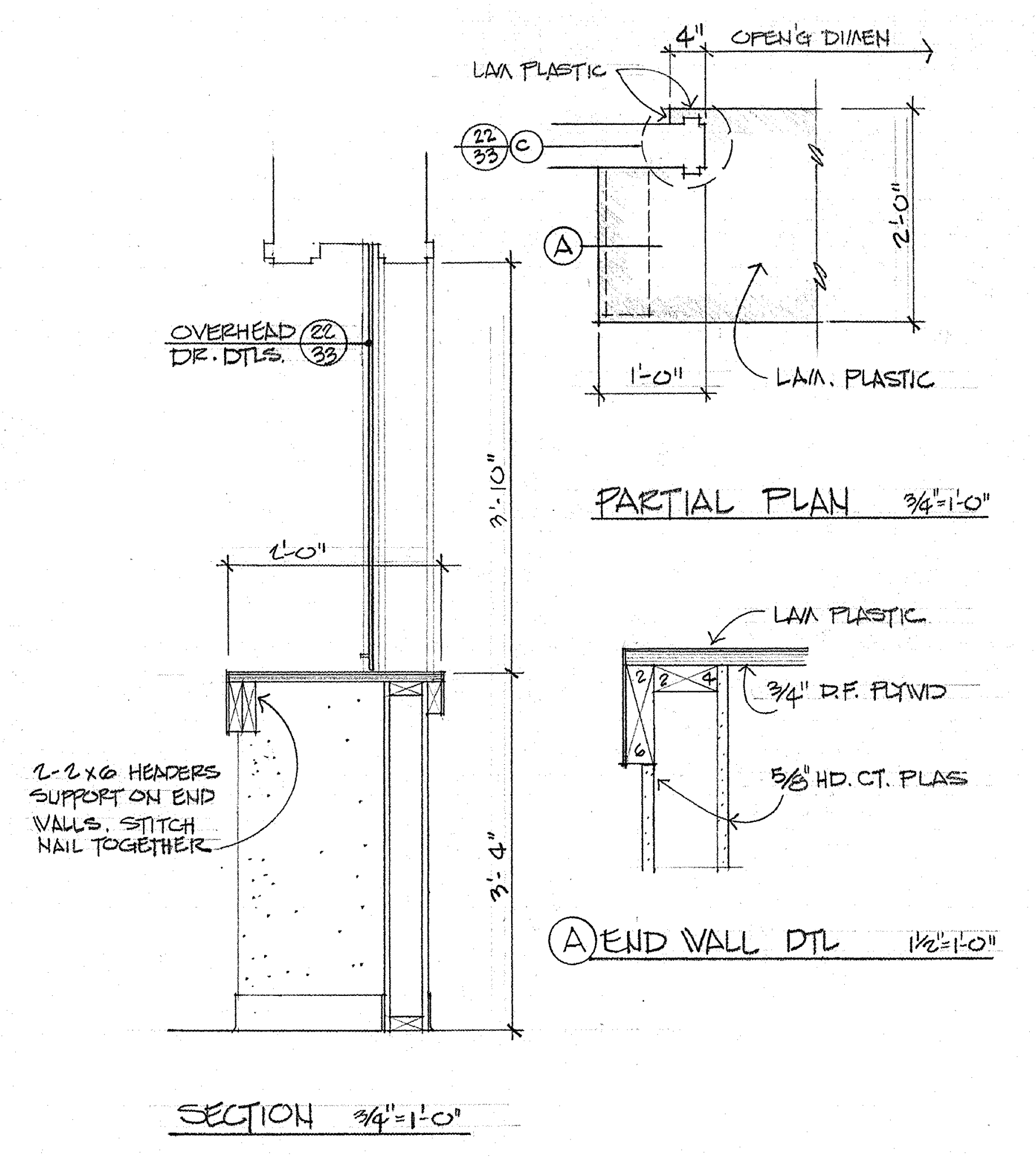
OVERHEAD DR. DTLS. 22/33
2'-0"
3'-10"
2-2x6 HEADERS SUPPORT ON END WALLS. STITCH NAIL TOGETHER
3'-4"
SECTION ¾"=1'-0"
4"
OPEN'G DIMEN
LAM PLASTIC
22/33 C
A
2'-0"
1'-0"
LAM. PLASTIC
PARTIAL PLAN ¾"=1'-0"
LAM PLASTIC
¾" D.F. PLYWD
⅝" HD. CT. PLAS
A END WALL DTL 1½"=1'-0"

3/38 CONCESSION COUNTER

SCALE AS NOTED

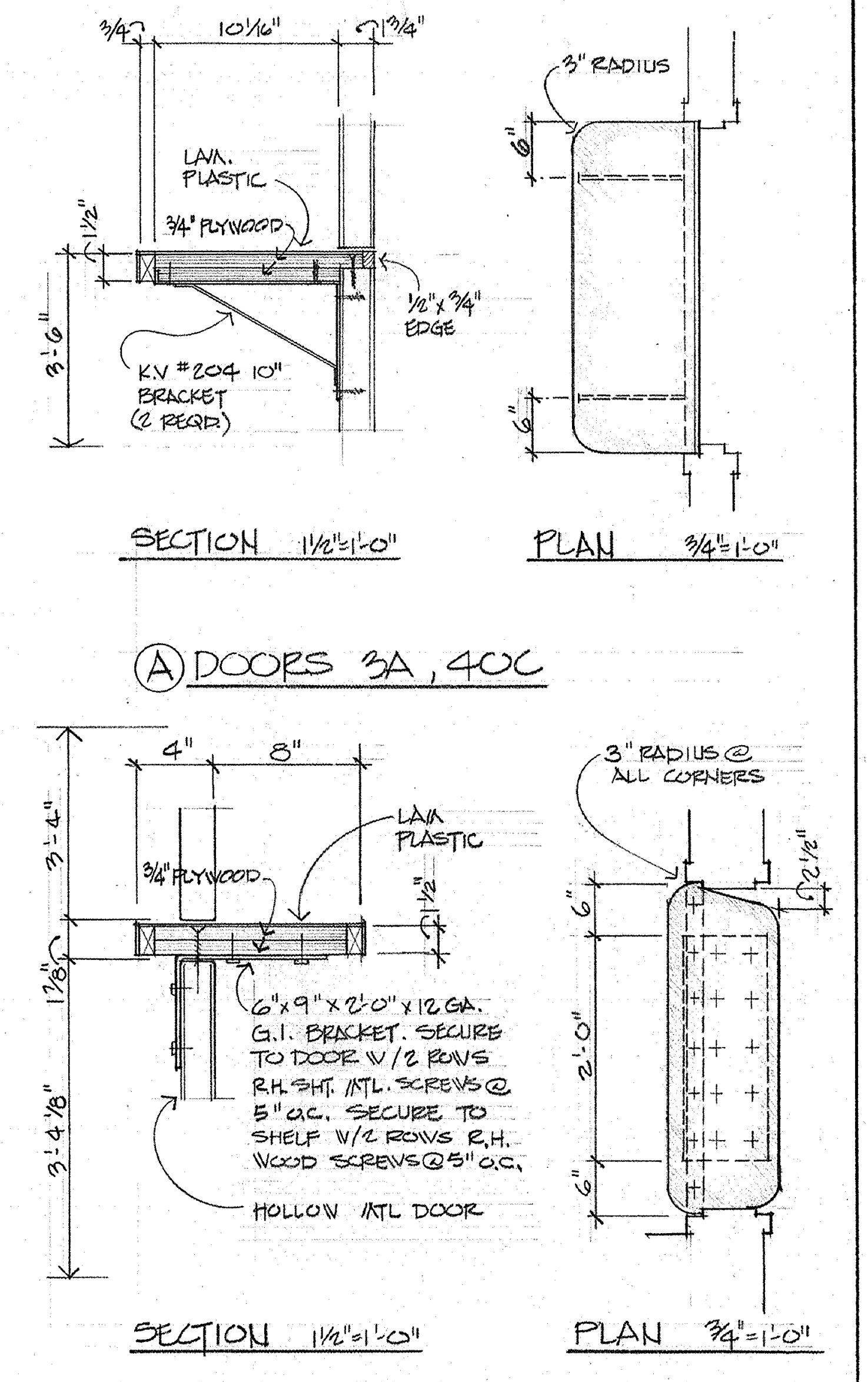
¾"
10 1/16"
1¾"
LAM. PLASTIC
¾" PLYWOOD
1½"
3'-6"
½" x ¾" EDGE
K.V #204 10" BRACKET (2 REQ'D)
SECTION 1½"=1'-0"
3" RADIUS
6"
6"
PLAN ¾"=1'-0"
4"
8"
3'-4"
¾" PLYWOOD
LAM PLASTIC
1½"
1⅞"
6" x 9" x 2'-0" x 12 GA. G.I. BRACKET. SECURE TO DOOR W/ 2 ROWS R.H. SHT. MTL. SCREWS @ 5" O.C. SECURE TO SHELF W/ 2 ROWS R.H. WOOD SCREWS @ 5" O.C.
3'-4⅛"
HOLLOW MTL DOOR
SECTION 1½"=1'-0"
3" RADIUS @ ALL CORNERS
2½"
6"
2'-0"
6"
PLAN ¾"=1'-0"

Ⓐ DOORS 3A, 40C

Ⓑ DOORS 61C, 63C

4/38 DUTCH DOOR DTLS

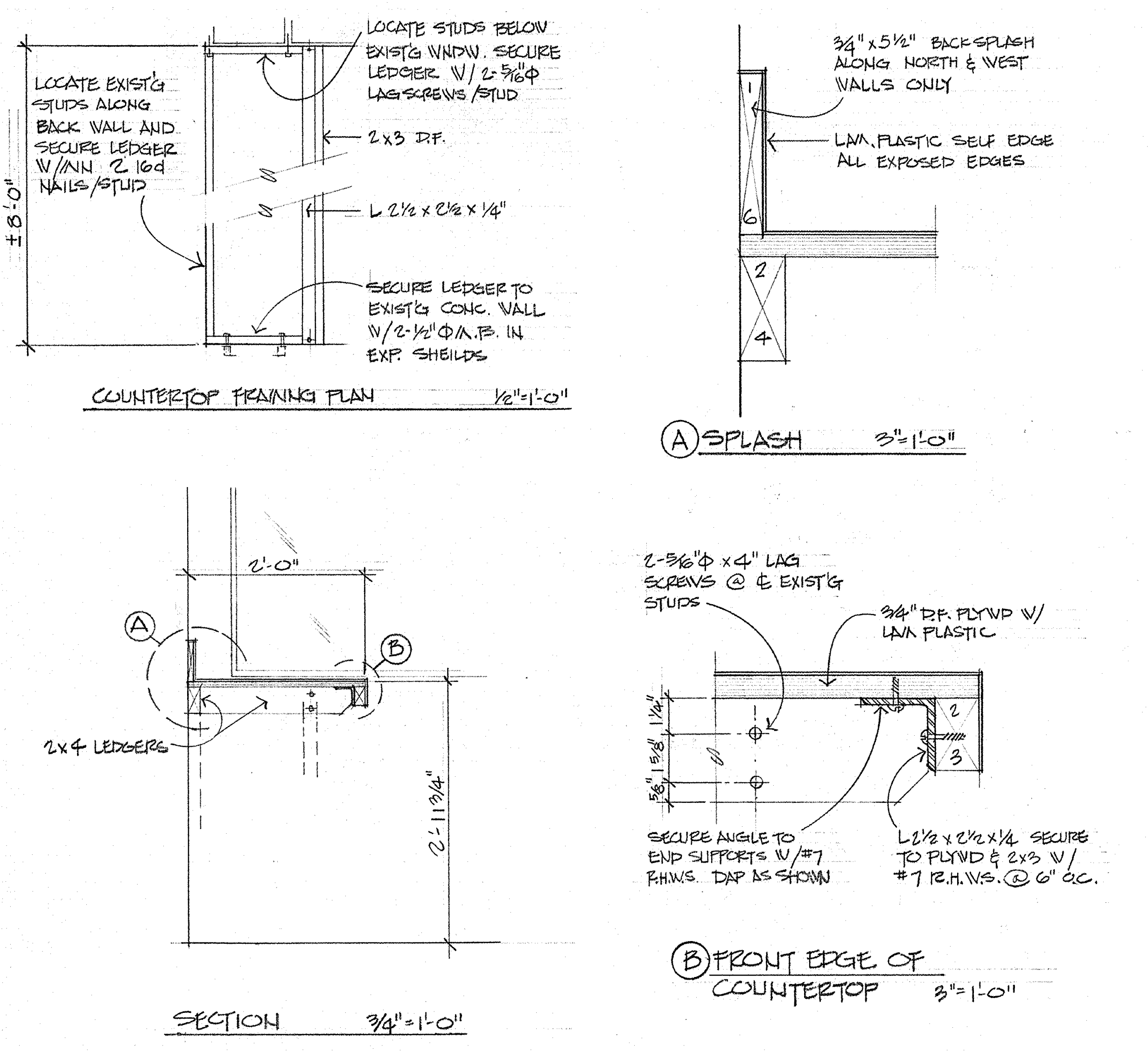
LOCATE EXIST'G STUDS ALONG BACK WALL AND SECURE LEDGER W/MIN 2 16d NAILS/STUD
±8'-0"
LOCATE STUDS BELOW EXIST'G WNDW. SECURE LEDGER W/ 2-5/16"Φ LAG SCREWS/STUD
2x3 D.F.
L 2½ x 2½ x ¼"
SECURE LEDGER TO EXIST'G CONC. WALL W/ 2-½"Φ M.B. IN EXP. SHEILDS
COUNTERTOP FRAMING PLAN ½"=1'-0"
¾" x 5½" BACKSPLASH ALONG NORTH & WEST WALLS ONLY
LAM. PLASTIC SELF EDGE ALL EXPOSED EDGES
A SPLASH 3"=1'-0"
2'-0"
A
B
2x4 LEDGERS
2'-11¾"
SECTION ¾"=1'-0"
2-5/16"Φ x 4" LAG SCREWS @ ℄ EXIST'G STUDS
¾" D.F. PLYWD W/ LAM PLASTIC
1¼"
1⅝"
⅝"
SECURE ANGLE TO END SUPPORTS W/ #7 R.H.W.S. DAP AS SHOWN
L 2½ x 2½ x ¼ SECURE TO PLYWD & 2x3 W/ #7 R.H.W.S. @ 6" O.C.
B FRONT EDGE OF COUNTERTOP 3"=1'-0"

5/38 FOOD PREPARATION COUNTER

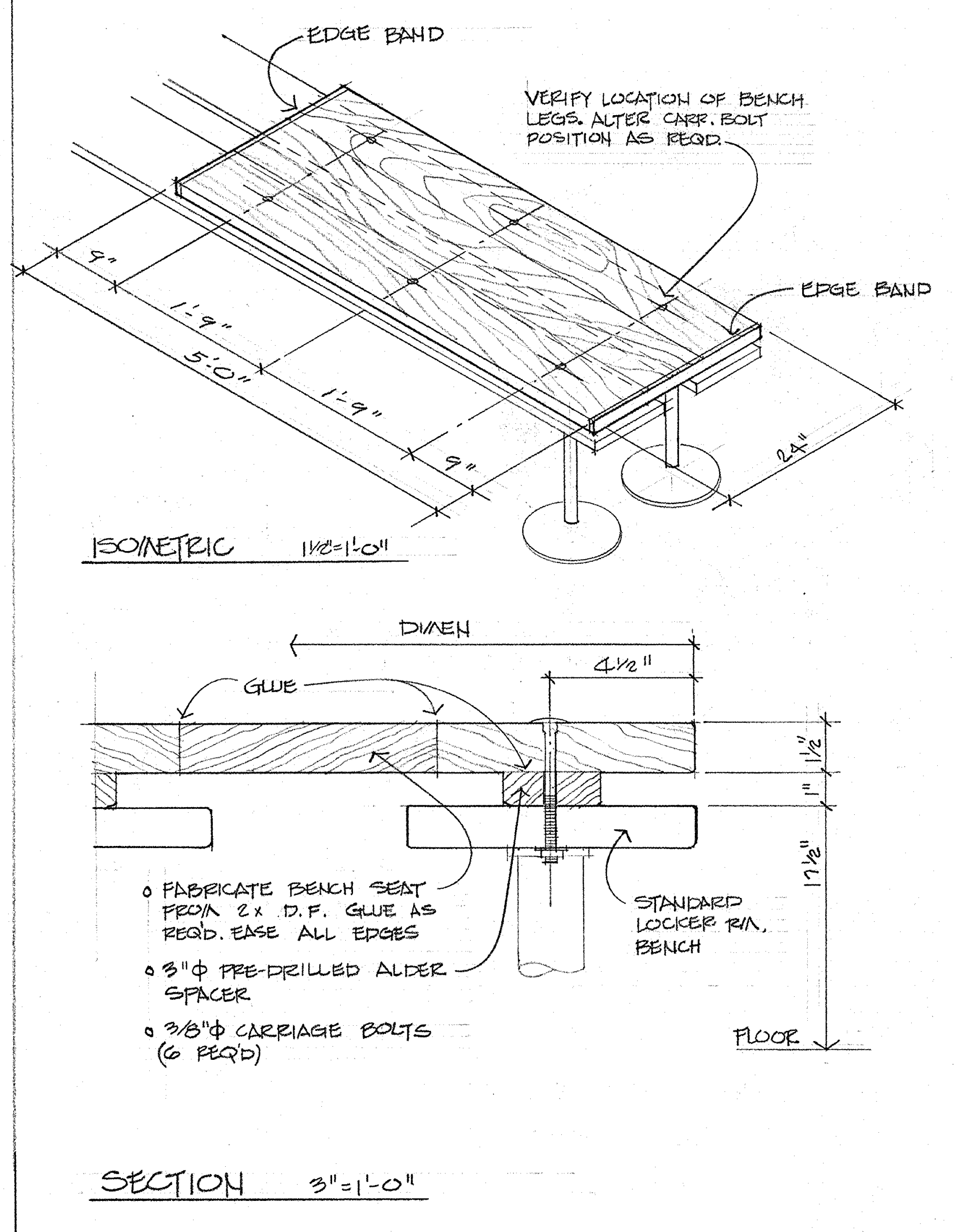
EDGE BAND
VERIFY LOCATION OF BENCH LEGS. ALTER CARR. BOLT POSITION AS REQ'D.
EDGE BAND
9"
1'-9"
5'-0"
1'-9"
9"
24"
ISOMETRIC 1½"=1'-0"
DIMEN
4½"
GLUE
1½"
1"
17½"
• FABRICATE BENCH SEAT FROM 2x D.F. GLUE AS REQ'D. EASE ALL EDGES
• 3"Φ PRE-DRILLED ALDER SPACER
• ⅜"Φ CARRIAGE BOLTS (6 REQ'D)
STANDARD LOCKER RM. BENCH
FLOOR
SECTION 3"=1'-0"

6/38 REMOVABLE HANDICAP BENCHTOP (THREE PLACES)

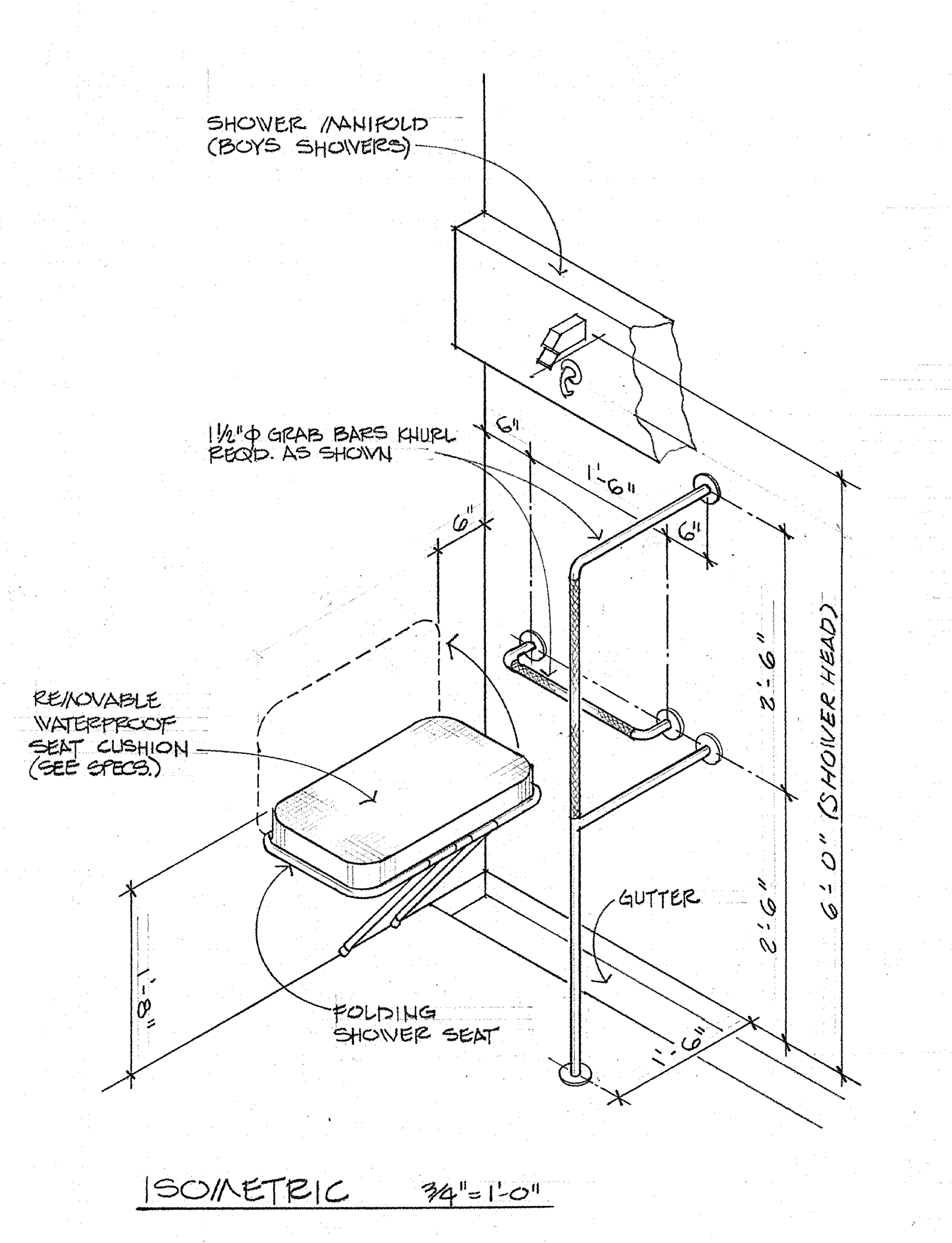
SHOWER MANIFOLD (BOYS SHOWERS)
1½"Φ GRAB BARS KHURL REQ'D. AS SHOWN
6"
1'-6"
6"
6"
2'-6"
6'-0" (SHOWER HEAD)
REMOVABLE WATERPROOF SEAT CUSHION (SEE SPECS)
GUTTER
2'-6"
1'-8"
FOLDING SHOWER SEAT
1'-6"
ISOMETRIC ¾"=1'-0"

7/38 HANDICAP SHOWER STALL (THREE PLACES)

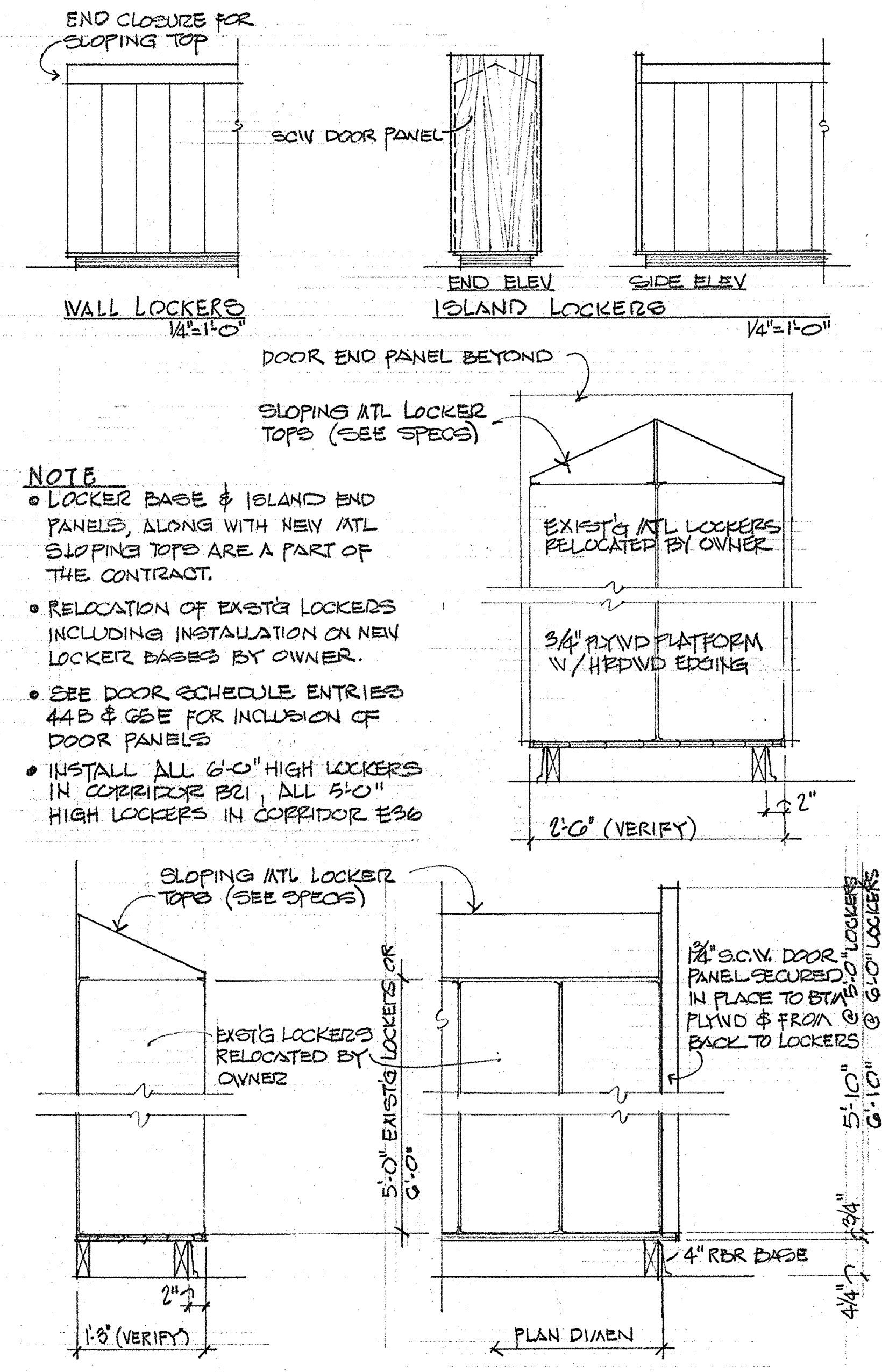
END CLOSURE FOR SLOPING TOP
WALL LOCKERS ¼"=1'-0"
SCW DOOR PANEL
END ELEV
SIDE ELEV
ISLAND LOCKERS ¼"=1'-0"
DOOR END PANEL BEYOND
SLOPING MTL LOCKER TOPS (SEE SPECS)
EXIST'G MTL LOCKERS RELOCATED BY OWNER
¾" PLYWD PLATFORM W/ HRDWD EDGING
2'-6" (VERIFY)
2"
SLOPING MTL LOCKER TOPS (SEE SPECS)
EXIST'G LOCKERS RELOCATED BY OWNER
5'-0" EXIST'G LOCKERS OR 6'-0"
1¾" S.C.W. DOOR PANEL SECURED IN PLACE TO BTM PLYWD & FROM BACK TO LOCKERS
5'-10" @ 5'-0" LOCKERS
6'-10" @ 6'-0" LOCKERS
2"
1'-3" (VERIFY)
4" RBR BASE
¾"
4¼"
PLAN DIMEN

NOTE
- LOCKER BASE & ISLAND END PANELS, ALONG WITH NEW MTL SLOPING TOPS ARE A PART OF THE CONTRACT.
- RELOCATION OF EXIST'G LOCKERS INCLUDING INSTALLATION ON NEW LOCKER BASES BY OWNER.
- SEE DOOR SCHEDULE ENTRIES 44B & 65E FOR INCLUSION OF DOOR PANELS
- INSTALL ALL 6'-0" HIGH LOCKERS IN CORRIDOR B21, ALL 5'-0" HIGH LOCKERS IN CORRIDOR E36

8/38 CORRIDOR LOCKER BASE

¾"=1'-0"

9/38 SHELVING SCHEDULE

PLAN MARK	ROOM №	SHELF MATERIAL	SIZE L	SIZE W	SIZE T	HARDWARE STANDARD LENGTH	HARDWARE BRACKET LENGTH	№ OF SHELVES	REMARKS
SH-1	B4	PART. BD.	9'-1" x	9" x	¾"	72"	8"	6	
SH-2	B4	PART. BD.	9'-1" x	9" x	¾"	72"	8"	6	
SH-3	C42	PART. BD.	③8'-0" x	12" x	¾"	72"	10"	6	③ VERIFY SHELF LENGTH
SH-4	C24	PART. BD.	5'-11" x	12" x	¾"	72"	10"	6	
SH-5	C79	PART. BD.	8'-0" x	12" x	¾"	72"	10"	6	
SH-6	E26	HDWD PLY.	8'-0" x	12" x	¾"	48"	10"	4	
SH-7	E28	HDWD PLY.	4'-0" x	12" x	¾"	36"	10"	3	
SH-8	E38	PART. BD.	4'-8" x	16" x	¾"	72"	14"	6	
SH-9	E38	PART. BD.	12'-4" x	16" x	¾"	72"	14"	6	
SH-10	E38	PART. BD.	4'-8" x	16" x	¾"	72"	14"	6	
SH-11	E38	PART. BD.	5'-0" x	16" x	¾"	72"	14"	6	
SH-12	E38	PART. BD.	5'-0" x	16" x	¾"	72"	14"	6	
SH-13	E48	HDWD PLY.	12'-0" x	12" x	¾"	36"	10"	3	
SH-14	E37	HDWD PLY.	12'-0" x	12" x	¾"	36"	10"	3	
SH-15	E2	HDWD PLY.	2'-0" x	19" x	¾"	24" *	18"	1	*TOP OF STD. @ 72"
SH-16	C79	PART. BD.	8'-0" x	12" x	¾"	72"	10"	6	
SH-17	E22	HDWD. PLY.	10'-0" x	12" x	¾"	72"	10"	6	

- SHELF MATERIAL ¾" HARDWOOD PLYWOOD OR ¾" PARTICLE BOARD PLYWOOD. EDGE BAND EXPOSED EDGES ALL SHELVES
- HARDWARE: K.V. STANDARDS № 80 & K.V. BRACKETS № 180 (SEE DTL. BELOW)
- TOP OF ALL STANDARDS 7'-0" FROM FLOOR EXCEPT AS NOTED
- SPACING OF STANDARDS 24" O.C.
- PROVIDE WOOD STUD BACKING FOR ALL STANDARDS (INCL. MTL. STUD WALLS)

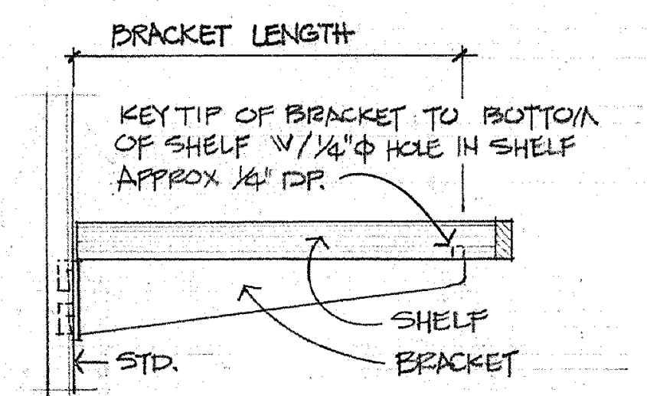
BRACKET LENGTH
KEY TIP OF BRACKET TO BOTTOM OF SHELF W/ ¼"Φ HOLE IN SHELF APPROX ¼" DP.
SHELF
BRACKET
STD.

TYPICAL BRACKET DTL.

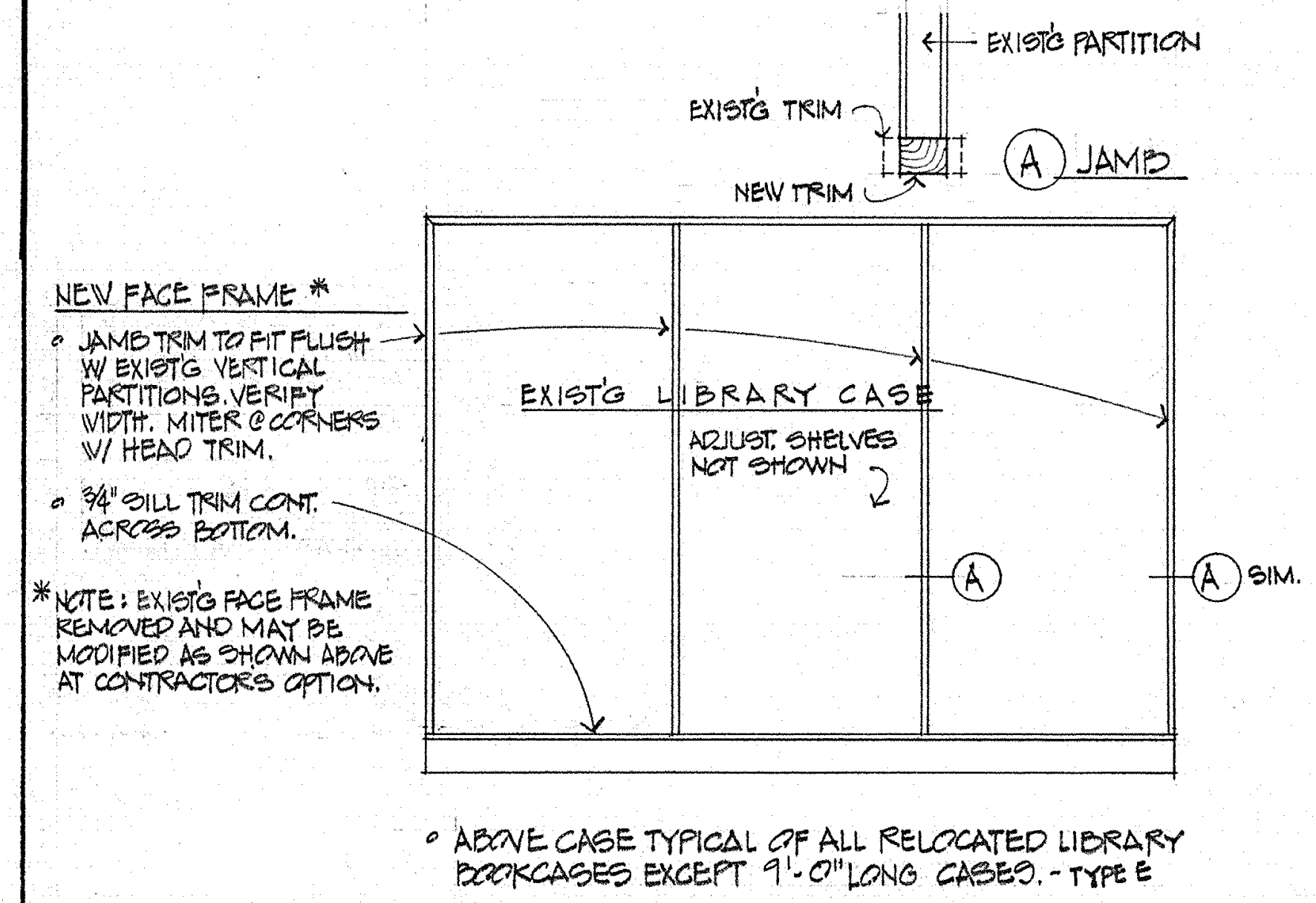
EXIST'G PARTITION
EXIST'G TRIM
NEW TRIM
A JAMB
NEW FACE FRAME *
• JAMB TRIM TO FIT FLUSH W/ EXIST'G VERTICAL PARTITIONS. VERIFY WIDTH. MITER @ CORNERS W/ HEAD TRIM.
• ¾" SILL TRIM CONT. ACROSS BOTTOM.
*NOTE: EXIST'G FACE FRAME REMOVED AND MAY BE MODIFIED AS SHOWN ABOVE AT CONTRACTORS OPTION.
EXIST'G LIBRARY CASE
ADJUST. SHELVES NOT SHOWN
A
A SIM.

- ABOVE CASE TYPICAL OF ALL RELOCATED LIBRARY BOOKCASES EXCEPT 9'-0" LONG CASES. - TYPE E
- SEE LIBRARY FLOOR PLAN, SHEET A-24, FOR VARIOUS CASE DIMENSIONS.

10/38 NEW LIBRARY BOOKCASE FACE FRAME ON EXIST'G BOOKCASE

NO SCALE

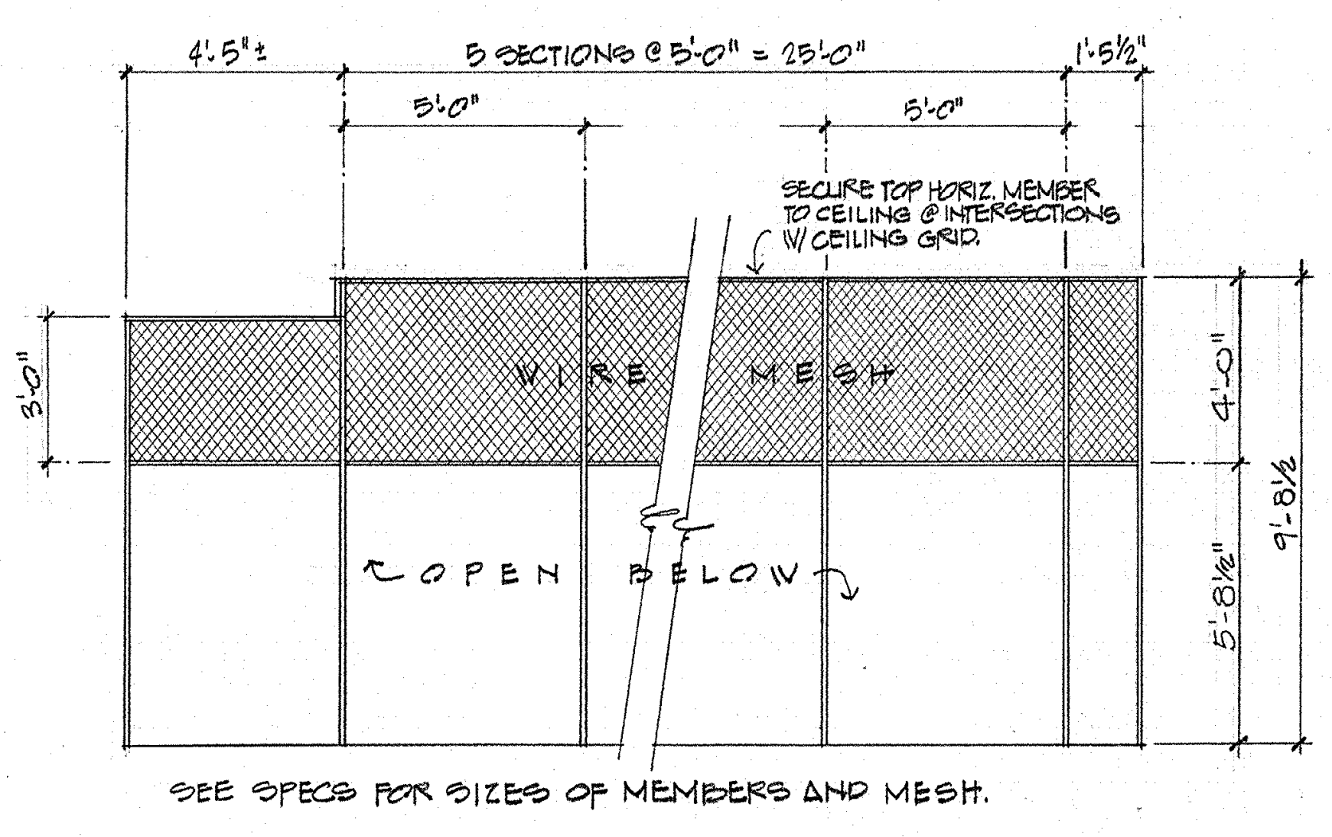
4'-5"±
5 SECTIONS @ 5'-0" = 25'-0"
1'-5½"
5'-0"
5'-0"
SECURE TOP HORIZ. MEMBER TO CEILING @ INTERSECTIONS W/ CEILING GRID.
3'-0"
WIRE MESH
4'-0"
9'-8½
OPEN BELOW
5'-8½"
SEE SPECS FOR SIZES OF MEMBERS AND MESH.

ELEVATION LOOKING EAST

11/38 WIRE MESH PARTITION BETWEEN LOCKERS IN ROOM C74 & C75

¼"=1'-0"

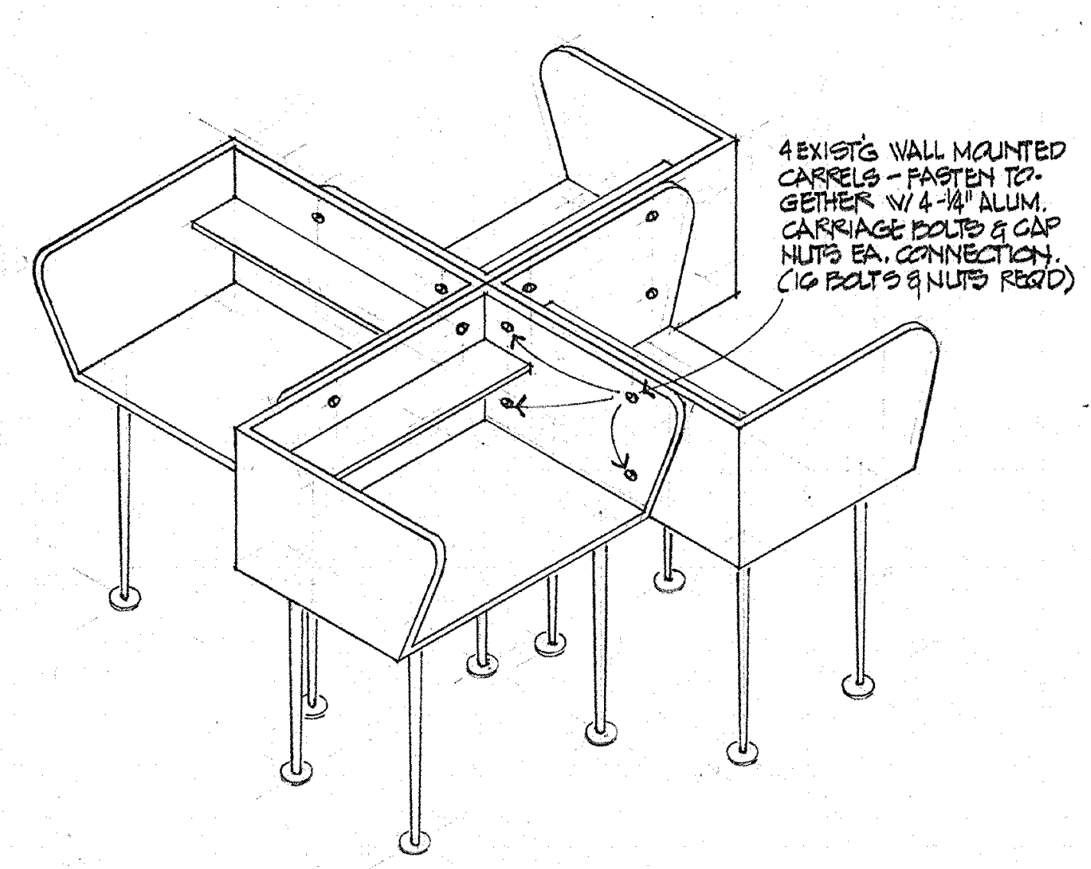
4 EXIST'G WALL MOUNTED CARRELS - FASTEN TOGETHER W/ 4-¼" ALUM. CARRIAGE BOLTS & CAP NUTS EA. CONNECTION. (16 BOLTS & NUTS REQ'D)

NOTE: ISLAND UNIT OF TWO CARRELS ONLY IS TO BE CONNECTED W/ FOUR ¼" ALUM CARRIAGE BOLTS & CAP NUTS SIM. TO ABOVE.

12/38 CONNECTION OF FOUR EXIST'G WALL CARRELS INTO ISLAND UNIT

½"=1'-0"

- CARREL FASTED TO ANGLE W/ TWO CARRIAGE BOLTS THRU EXIST'G HOLES IN CARREL TABLE TOP - EXIST'G BOLTS MAY BE RE-USED.
- ∠ 2½" x 2½" x 3/16" LEDGER. FASTENED TO METAL STRAP IN METAL STUD WALL W/ № 8 R.H. THREAD FORMING TAPPING SCREWS @ 16" O.C. FASTEN TO MASONRY WALL W/ № 8 R.H.W.S. IN LEAD SHIELD @ 16" O.C.

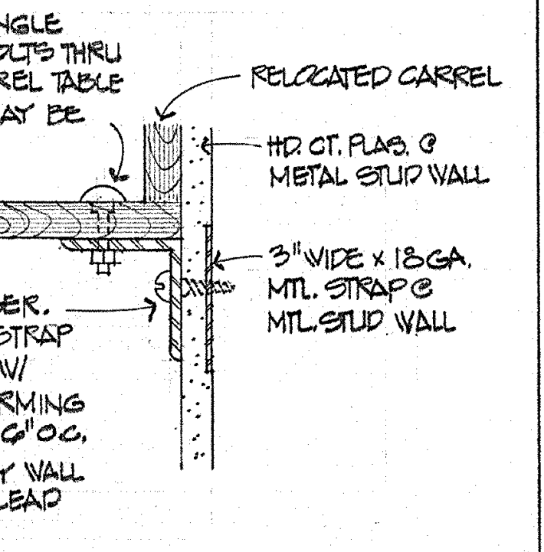
RELOCATED CARREL
HD. CT. PLAS. @ METAL STUD WALL
3" WIDE x 18 GA. MTL. STRAP @ MTL. STUD WALL

NOTE: CONNECTION OF CARRELS TO MTL. STUD WALL SHOWN ABOVE - CONN. TO MASONRY WALL SIMILAR.

13/38 CONN. OF EXIST CARRELS TO NEW WALL

3"=1'-0"

MILLWORK AND MISC. DETAILS
SWEET HOME HIGH SCHOOL
ADDITIONS AND ALTERATIONS 1974
DISTRICT 55 LINN COUNTY, OREGON

ARCHITECTS AIA
HAMLIN, MARTIN, SCHULTZ & GEYER
159 W. 12TH EUGENE, OREGON 97401

A
38
JOB NO.

REGISTERED ARCHITECT
CLARE K. HAMLIN
Clare K Hamlin
EUGENE, OREGON
STATE OF OREGON

SITE · GENERAL NOTES

1. SEE ARCHITECTURAL SITE GRADING PLAN FOR FINISH GRADE ELEVATIONS OF SITE & BUILDINGS.
2. SEE ELECTRICAL PLANS FOR UNDERGROUND CONDUIT ROUTING BETWEEN BUILDINGS. COORDINATE TRENCHING ROUTES.
3. SEE SPECIFICATION "SPECIAL CONDITIONS" FOR CONSTRUCTION STAGING PERIOD DATES. ALL WORK IN RESPECTIVE STAGING PERIODS COORDINATED WITH ALL OTHER TRADES.
4. SEE ARCHITECTURAL SITE PLANS FOR LOCATION OF ALL NEW BUILDINGS TO BE CONSTRUCTED ON SITE IN RELATIONSHIP TO EXISTING BUILDINGS.
5. MECHANICAL CONTRACTOR & SUB-CONTRACTORS SHALL VISIT JOB SITE, BEFORE SUBMITTING BIDS, AND VERIFY EXTENT OF WORK INVOLVED. DISCREPANCIES IN WORK INVOLVED SHALL BE NOTED AND REPORTED TO ARCHITECT BEFORE BIDDING.
6. MECHANICAL CONTRACTOR SHALL BE RESPONSIBLE FOR CAPPING & PLUGGING OF EXISTING PIPING IN DEMOLITION AREAS OF SECTORS 'A', 'B', 'C', & 'D'. SEE ARCHITECTURAL DEMOLITION PLANS FOR THEIR EXTENT OF WORK INVOLVED.
7. MECHANICAL CONTRACTOR SHALL SEE ARCHITECTURAL PLANS FOR ROOF DOWNSPOUT DETAILS FOR WORK INVOLVED.
8. MECHANICAL CONTRACTOR SHALL MARK ALL STUBBED OUT OR CAPPED PIPING BURIED ON SITE WITH 2" GALV. PIPE WITH CAPPED END DRIVEN 18" DOWN AND 4" ABOVE GRADE. PAINT PIPE CAP WHITE. INDICATE DEPTH OF OF PIPE BURY, PIPE SIZE, AND PIPE SERVICE ON PAPER AND INSERT IN CAPPED PIPE MARKER.

SHEET SCHEDULE

SHEET NO.	TITLE
M-1	SITE PLAN
M-2	DETAILS · SCHEDULE
M-3	SECTOR 'A' FDN. PLAN
M-4	'A' PLBG. PLAN
M-5	'A' H & V PLAN
M-6	'B' FDN. PLAN
M-7	'B' HVAC PLAN
M-8	HP DIA.-REFER.-DTLS.
M-9	'C' FDN. PLAN
M-10	'C' PLBG. PLAN
M-11	'C' H & V PLAN
M-12	'D' FDN. PLAN
M-13	'D' PLBG. PLAN
M-14	'D' H & V PLAN
M-15	'E' FDN. PLAN
M-16	'E' PLBG. PLAN
M-17	'E' HVAC PLAN

SYMBOLS

	WALL SUPPLY AIR REGISTER
	CEILING SUPPLY AIR DIFFUSER
	WALL RETURN AIR GRILLE
	CEILING RETURN OR EXHAUST AIR GRILLE
	FLOOR RETURN AIR GRILLE
☒	SUPPLY AIR DUCT UP
	SUPPLY AIR DUCT DOWN
	RETURN AIR DUCT UP
	RETURN AIR DUCT DOWN
	SPLITTER DAMPER IN DUCT
▨	SOUND ATTENUATED DUCT
	FLEXIBLE CONNECTION
	TURNVANE ELBOW
	AIR TURNING DEVICE IN DUCT
	DAMPER IN DUCT
20X5	GRILLE SIZE; WIDTH × HEIGHT
1000	AIR VOLUME IN CFM
HWR-S	HIGH WALL RETURN OR SUPPLY GRILLE
LWR-S	LOW WALL RETURN OR SUPPLY GRILLE
▽T	ROOM THERMOSTAT
SA	SUPPLY AIR
RA	RETURN AIR
EA	EXHAUST AIR
OSA	OUTSIDE AIR
OBMD	OPPOSED BLADE MIXING DAMPER
AD	AUTOMATIC DAMPER
MBD	MANUAL BALANCING DAMPER
FD	FIRE DAMPER — U.L. LABELLED
HP	HEAT PUMP UNIT
HV	HEATING AND VENTILATING UNIT
REF	ROOF EXHAUST FAN
UEF	UTILITY EXHAUST FAN
RV	ROOF VENTILATOR
CUH	CABINET UNIT HEATER
DC	DUCT COIL
——— S	STEAM PIPE
– – – – CR	CONDENSATE RETURN PIPE
– – – – PCR	PUMPED CONDENSATE PIPE
——— HS	HEAT PUMP SUPPLY WATER PIPE
– – – – HR	HEAT PUMP RETURN WATER PIPE
– – – – D	HEAT PUMP DRAIN LINE
SV	SAFETY RELIEF VALVE — A.S.M.E.
——▶——	DIRECTION OF FLOW IN PIPE
—·— CW	COLD WATER SUPPLY PIPE
—···— HW	HOT WATER SUPPLY PIPE
—··— HWR	HOT WATER RECIRCULATING
— — — W	WASTE PIPE
AW	ACID RESISTING WASTE PIPE
- - - - - V	VENT PIPE
	STORM DRAINAGE PIPE
CO	PLUMBING CLEANOUT
——o	PIPE UP
	PIPE DOWN
→	PIPE PITCHED DOWN
—T—	TEMPERED HOT WATER -110°
—G—	GAS PIPE
	GAS SHUTOFF COCK
WH	WALL HYDRANT
HB	HOSE BIBB
DV	DRAIN VALVE
	PIPE SLEEVED THRU WALL
⊗ AAV	AUTOMATIC AIR VENT VALVE
	MERCURY THERMOMETER
	STRAINER — UNION — ADJUSTING COCK
	VALVES: GATE — GLOBE — CHECK
	AUTOMATIC VALVE
	FLOW CONTROL VALVE
RV	CODE PRESSURE - TEMPERATURE RELIEF VALVE
F&T	FLOAT AND THERMOSTATIC TRAP
FL	FLOW LINE
S %	SLOPE OF PIPE
VTR	VENT THRU ROOF
CB	CATCH BASIN
IE	INVERT ELEVATION
DS	DOWNSPOUT
MH	MANHOLE
◀——	GAS COCK OUTLET

LEGEND

NEW CONSTRUCTION	▒
MAJOR REMODELING	▨

SYMBOLS CONT:

1/M-6	FLOOR PLAN
A/M-10	DETAIL
D/M-4	SECTION
1.	GENERAL REFERENCE NOTE --- SEE SHEET M-8
D3	ROOM NUMBER

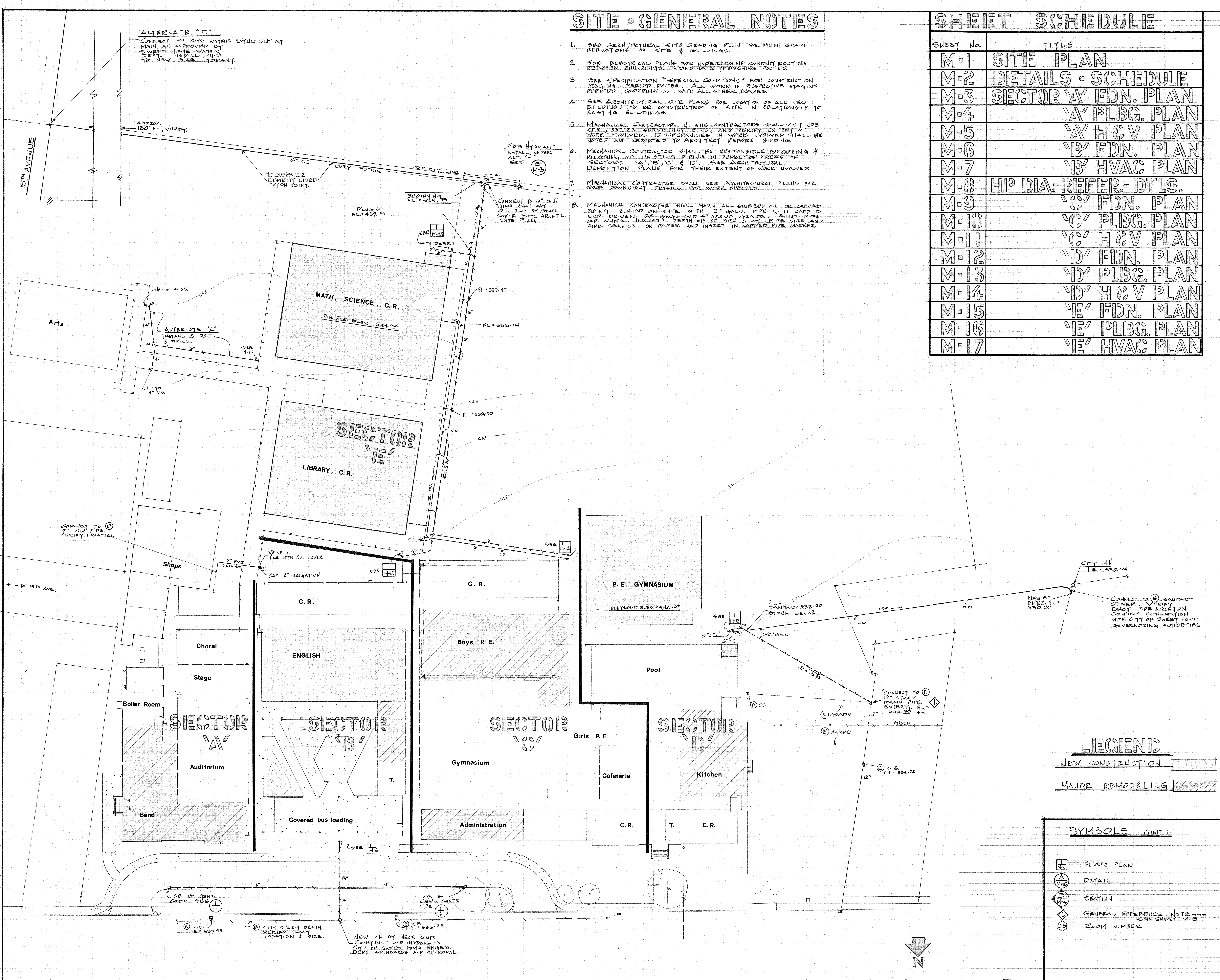
ALTERNATE "D"
CONNECT TO CITY WATER STUB OUT AT MAIN AS APPROVED BY SWEET HOME WATER DEPT. INSTALL PIPE TO NEW FIRE HYDRANT.
18TH AVENUE
APPROX. 180' +-, VERIFY.
6" C.I.
CLASS 22 CEMENT LINED TYTON JOINT.
BURY 30" MIN.
PROPERTY LINE
50 FT.
FIRE HYDRANT INSTALL UNDER ALT. "D". SEE B/M-3
BEGINNING F.L. = 539.95
CONNECT TO 6" O.J. TILE EACH WAY. O.J. TILE BY GEN'L. CONTR. SEE ARCH'T'L. SITE PLAN.
PLUG 6" F.L. = 439.95
SEE 1/M-15
S=.5%
CO
F.L. = 539.40
F.L. = 538.80
F.L. = 538.90
S=.5%
S=1%
C.O.
545
544
543
542
541
540
UP TO 4" D.S.
ALTERNATE "E" INSTALL 2 D.S. & PIPING.
SEE M-15
UP TO 4" D.S.
Arts
MATH, SCIENCE, C.R.
FIN. FLR. ELEV. 544.00
SECTOR 'E'
LIBRARY, C.R.
CONNECT TO (E) 2" CW PIPE. VERIFY LOCATION
2" PVC SCH. 40
VALVE IN TILE WITH C.I. COVER
CAP 2" IRRIGATION
SEE 1/M-15
SEE 1/M-12
TO 18TH AVE.
Shops
C.R.
C.R.
Choral
Stage
ENGLISH
Boys P.E.
P.E. GYMNASIUM
FIN. FLOOR ELEV. = 542.67
Pool
Boiler Room
SECTOR 'A'
Auditorium
Band
SECTOR 'B'
T.
Covered bus loading
SECTOR 'C'
Gymnasium
Girls P.E.
Cafeteria
SECTOR 'D'
Kitchen
Administration
C.R.
T.
C.R.
SEE 1/M-12
F.L. = SANITARY 533.20 STORM 537.22
8" C.I.
6" C.I.
8" CONC.
S=.5%
1%
CITY M.H. I.E. = 530.04
NEW 8" ENTER. F.L. = 530.20
CONNECT TO (E) SANITARY SEWER. VERIFY EXACT PIPE LOCATION. CONFIRM CONNECTION WITH CITY OF SWEET HOME GOVERNORING AUTHORITIES.
CONNECT TO (E) 12" STORM DRAIN PIPE. ENTER'G. F.L. = 536.90 +-. 1.
(E) CB
(E) GRADE
(E) ASPHALT
FENCE
12"
(E) C.B. I.E. = 536.72
SEE 1/M-6
8"
4"
CB BY GEN'L. CONTR. SEE
(E) CB I.E. = 537.55
(E) CITY STORM DRAIN. VERIFY EXACT LOCATION & SIZE.
NEW M.H. BY MECH. CONTR. CONSTRUCT AND INSTALL TO CITY OF SWEET HOME ENGR'G. DEPT. STANDARDS AND APPROVAL.
(E) CB I.E. = 536.78
N

SITE PLAN

1/M-1 SCALE 1" = 32'0"

REGISTERED PROFESSIONAL ENGINEER
3365
R. F. Marquess
OREGON
NOV. 7, 1952
ROBERT F. MARQUESS

SITE PLAN

SWEET HOME HIGH SCHOOL
ADDITIONS AND ALTERATIONS 1974
DISTRICT 55 LINN COUNTY, OREGON

ARCHITECTS
HAMLIN, MARTIN, SCHULTZ & GEYER
AIA
159 W. 12TH EUGENE, OREGON 97401

M
1
JOB NO.

REGISTERED ARCHITECT
CLARE K. HAMLIN
Clare K. Hamlin
EUGENE, OREGON
STATE OF OREGON

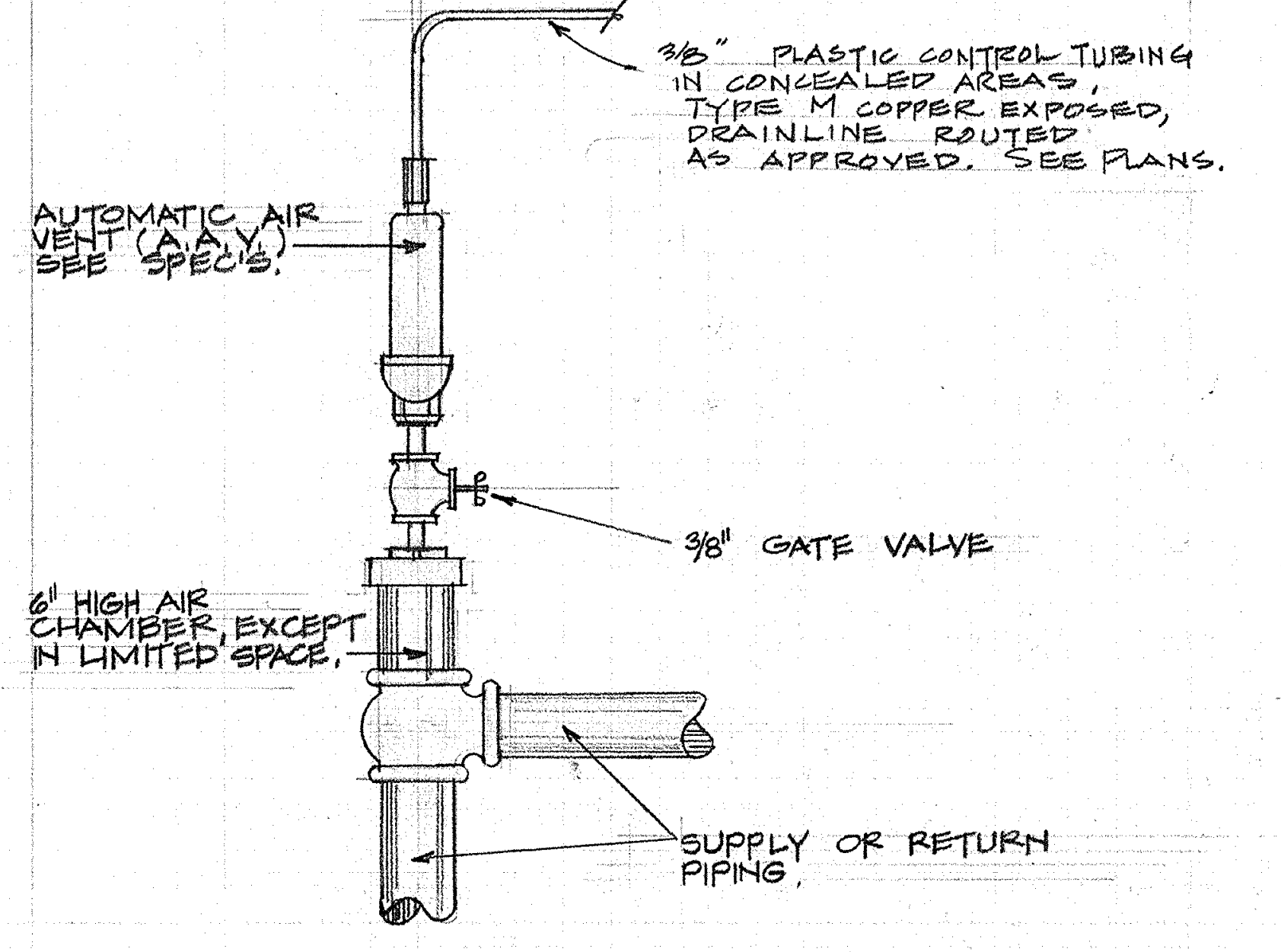
3/8" PLASTIC CONTROL TUBING IN CONCEALED AREAS, TYPE M COPPER EXPOSED, DRAINLINE ROUTED AS APPROVED. SEE PLANS.
AUTOMATIC AIR VENT (A.A.V.) SEE SPEC'S.
3/8" GATE VALVE
6" HIGH AIR CHAMBER, EXCEPT IN LIMITED SPACE.
SUPPLY OR RETURN PIPING.

TYPICAL A.A.V. VALVE INSTALLATION DETAIL (A / M-2)

NOT TO SCALE

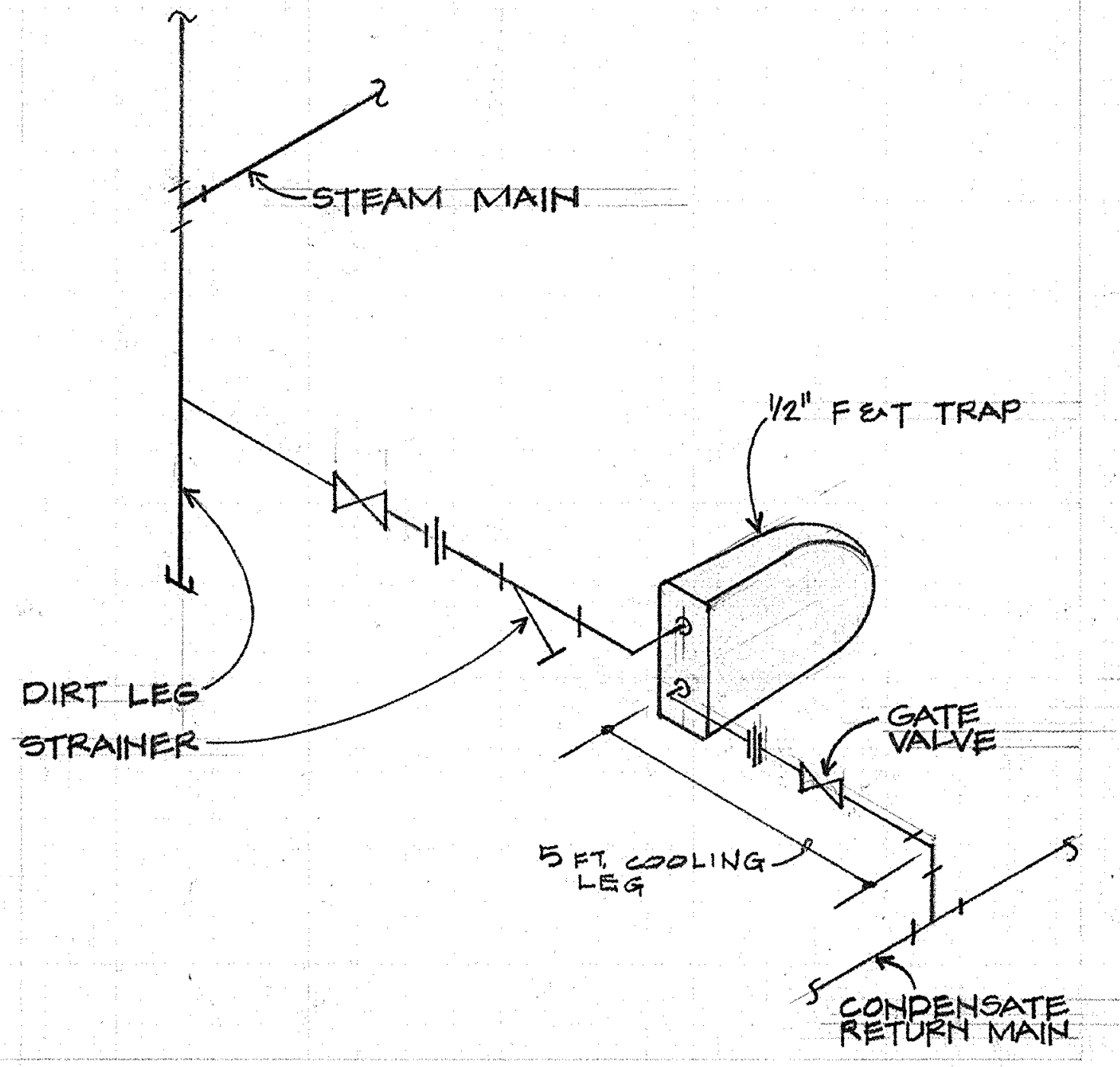
STEAM MAIN
1/2" F&T TRAP
DIRT LEG
STRAINER
GATE VALVE
5 FT. COOLING LEG
CONDENSATE RETURN MAIN

TYPICAL DRIP TRAP INSTALL. (B / M-2)

NOT TO SCALE

HEATING - VENTILATING - EXHS'T. EQUIP'T. SCHED.

UNIT TYPE	UNIT No.	UNIT LOCATION	MANUF'R'S MODEL	CFM	E.S.P.	OUTLET VELOC.	FAN BLADE	TIP SPEED RANGE	MOTOR H.P.	VOLTAGE PHASE	MOTOR CONTROL DEVICE	STARTER CONTROL	CONTROL LOCA.	REMARKS
HEATING & VENTIL'G.	HV-1	SECTOR A	PACE A-20	6,200	1 1/4"	1500	FC	3200	5	240-3φ	MAG. STARTER	T.S.-1	RM. A27	MT. STAT AT BOTTOM OF STAIRWELL
	HV-2	C	PACE A-15	4,200	1 1/4"	1805	FC	3250	3	240-3φ	MAG. STARTER	T.S.-2	RM. C84	① SIGN AT MANUAL SW. FOR UNITS TO READ "HV UNITS 2-3-4 TO OPERATE ONLY WHEN CENTRAL GYM HV UNIT IS OPERATING."
	HV-3	C	PACE A-15	4,200	1 1/4"	1805	FC	3250	3	240-3φ	MAG. STARTER	T.S.-2	RM. C84	
	HV-4	C	PACE A-15	3,600	1 1/2"	1545	FC	3450	3	240-3φ	MAG. STARTER	T.S.-3	RM. C84	
	HV-5	C	PACE A-15	3,200	1 3/4"	1390	FC	3170	2	240-3φ	MAG. STARTER	T.S.-4	RM. C14	
	HV-6	D	PACE B-15	8,000	1 1/2"	1738	FC	3340	5	240-3φ	MAG. STARTER	T.S.-5	RM. D27	
ROOF EXHAUST FAN	REF-1	C	PACE CRE-20	2,600	3/8"	1120	FC	1860	1/2	240-3φ	MAG. STARTER	T.S.-2	RM. C84	
	REF-2	C	PACE CRE-20	2,700	3/8"	1190	FC	1876	3/4	240-3φ	MAG. STARTER	T.S.-2	RM. C84	
	REF-3	C	PACE CRE-15	1,500	3/8"	1190	FC	1917	1/3	120-1φ	T.S.-3	—	RM. C84	
	REF-4	C	PACE CRE-22	3,200	3/8"	1120	FC	1833	3/4	240-3φ	MAG. STARTER	T.S.-2	RM. C84	
	REF-5	C	PACE CRE-12	900	3/8"	1090	FC	1860	1/4	120-1φ	MANUAL SWITCH	—	RM. C63	
	REF-6	C	PACE CRE-20	2,500	3/8"	1090	FC	1834	1/2	240-3φ	MAG. STARTER	T.S.-3	RM. C84	
	REF-7	C	PACE CRE-11	650	1/4"	900	FC	1589	1/4	120-1φ	MANUAL SWITCH	—	RM. C36	
	REF-8	C	PACE CRE-13	1,150	1/4"	1100	FC	1656	1/4	120-1φ	MANUAL SWITCH	—	RM. C34	
	REF-9	D	PACE CRE-6	240	1/4"	1000	FC	1982	1/6	120-1φ	MANUAL SWITCH	—	RM. D16	WITH STYLE A SOUND ATTN. CURB
	REF-10	D	PACE CRE-8	390	1/4"	1100	FC	1874	1/6	120-1φ	T.S.-5	—	RM. D27	
	REF-11	E	PACE CRE-12	900	1/4"	1060	FC	1680	1/4	120-1φ	MANUAL SWITCH	—	RM. E2	
	REF-12	E	PACE CRE-13	1000	1/4"	955	FC	1575	1/4	120-1φ	MANUAL SWITCH	—	RM. E2	
	REF-13	E	PACE CRE-12	900	1/4"	1060	FC	1680	1/4	120-1φ	MANUAL SWITCH	—	RM. E47	
	REF-14	E	PACE CRE-12	850	3/8"	1000	FC	1833	1/4	120-1φ	SWITCH AT CABINET	—	RM. E47	FUME HOOD EXHAUST. EXPLOSION PROOF MOTORS-FANS
	REF-15	E	PACE CRE-12	850	3/8"	1000	FC	1833	1/4	120-1φ		—	RM. E47	
UTILITY EXHAUST FAN	UEF-1	A	PACE U-9F	550	1/4"	1000	FC	1597	1/6	120-1φ	T.S.-1	—	RM. A27	
	UEF-2	E	PACE U-9F	470	1/4"	850	FC	1487	1/6	120-1φ	H.P. PANEL	T.S.-7	RM. E13	
	UEF-3	E	PACE U-9F	500	1/4"	910	FC	1528	1/6	120-1φ	H.P. PANEL	T.S.-8	RM. E31	
	UEF-4	D	PACE U-8F	300	1/4"	800	FC	1750	1/10	120-1φ	MANUAL SWITCH	—	RM. D22	EXPLOSION PROOF, ENTIRE BISONITE COATED.

FOOTNOTES: ① AUTO. TEMP. CONTROL CONTRACTOR SHALL FURNISH AND INSTALL 12" x 8" PLASTIC SIGN. MOUNT OVER HV-2, 3, 4 CONTROL SWITCHES IN RM. C84.

HEAT PUMP UNITS SCHEDULE

HEAT PUMP No.	MFRS' MODEL*	STYLE	COOLING CAPAC. BTUH	HEATING CAPAC. BTUH	CFM	BLOWER E.S.P.	COMP'R. H.P.	GPM	VOLTS PHASE	UNIT LOCA.	ROOM AREAS SERVED
HP-1	251	HORIZONTAL	32,000	30,200	950	.40	2.5	5.34	240-1φ	SECTOR 'B'	B2
HP-2	201	"	26,300	23,600	800	.35	2.0	4.2	240-1φ	'B'	B1
HP-3	201	"	26,300	23,600	800	.35	2.0	4.2	240-1φ	'B'	B3
HP-4	201	"	26,300	23,600	800	.35	2.0	4.2	240-1φ	'B'	B5 B6
HP-5	201	"	26,300	23,600	800	.35	2.0	4.2	240-1φ	'B'	B7
HP-6	201	"	26,300	23,600	800	.35	2.0	4.2	240-1φ	'B'	B9 B10 B11 B12
HP-7	201	"	26,300	23,600	800	.35	2.0	4.2	240-1φ	'B'	B8
HP-8	151	"	19,500	17,800	610	.25	1.5	3.25	240-1φ	'B'	B13
HP-9	503	"	61,000	54,000	1800	.40	5.0	10.2	208-3φ	EAST 'E'	E17
HP-10	303	"	40,300	37,400	1250	.40	3.0	6.7	208-3φ	'E'	E21 E22
HP-11	403	"	49,500	46,000	1600	.40	4.0	8.25	208-3φ	'E'	E17 E20
HP-12	251	"	32,000	30,200	950	.40	2.5	5.4	208-1φ	'E'	E18
HP-13	201	"	26,300	23,600	800	.35	2.0	4.2	208-1φ	'E'	E4
HP-14	303	"	40,300	37,400	1250	.40	3.0	6.7	208-3φ	'E'	E3
HP-15	201	"	26,300	23,600	800	.35	2.0	4.2	208-1φ	'E'	E7 E9
HP-16	251	"	32,000	30,200	950	.40	2.5	5.4	208-1φ	'E'	E2
HP-17	251	"	32,000	30,200	950	.40	2.5	5.4	208-1φ	'E'	E11
HP-18	303	"	40,300	37,400	1250	.40	3.0	6.7	208-3φ	'E'	E1
HP-19	151	"	19,500	17,800	610	.25	1.5	3.25	208-1φ	'E'	E12 E13 E15 E16
HP-20	403	"	49,500	46,000	1600	.40	4.0	8.25	208-3φ	WEST 'E'	E47
HP-21	201	"	26,300	23,600	800	.35	2.0	4.2	208-1φ	'E'	E36
HP-22	251	"	32,000	30,200	950	.40	2.5	5.4	208-1φ	'E'	E39 E40 E41 E42 E44
HP-23	251	"	32,000	30,200	950	.40	2.5	5.4	208-1φ	'E'	E48
HP-24	251	"	32,000	30,200	950	.40	2.5	5.4	208-1φ	'E'	E37
HP-25	403	"	49,500	46,000	1600	.40	4.0	8.25	208-3φ	'E'	E49
HP-26	403	"	49,500	46,000	1600	.40	4.0	8.25	208-3φ	'E'	E27
HP-27	251	"	32,000	30,200	950	.40	2.5	5.4	208-1φ	'E'	E29
HP-28	151	"	19,500	17,800	610	.25	1.5	3.25	208-1φ	'E'	E26
HP-29	251	"	32,000	30,200	950	.40	2.5	5.4	208-1φ	'E'	E28 E34
HP-30	251	"	32,000	30,200	950	.40	2.5	5.4	208-1φ	'E'	E24
HP-31	201	"	26,300	23,600	800	.35	2.0	4.2	208-1φ	'E'	E25
HP-32	251	"	32,000	30,200	950	.40	2.5	5.4	208-1φ	'E'	E46
HP-33	251	"	32,000	30,200	950	.40	2.5	5.4	208-1φ	'E'	E35

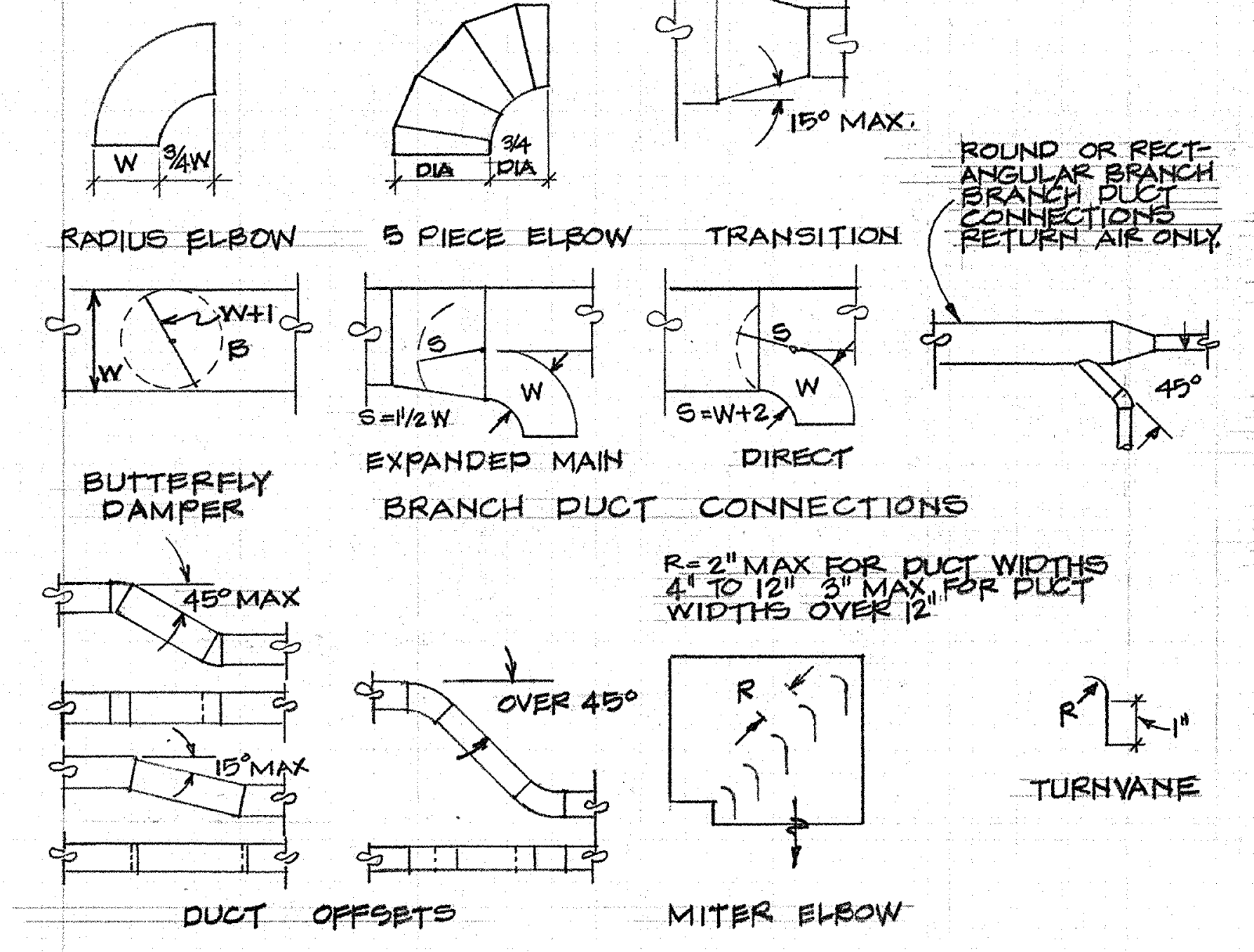
W
3/4W
RADIUS ELBOW
DIA
3/4 DIA
5 PIECE ELBOW
15° MAX.
TRANSITION
ROUND OR RECTANGULAR BRANCH BRANCH DUCT CONNECTIONS RETURN AIR ONLY.
45°
W+1
B
S
S=1 1/2 W
S=W+2
EXPANDED MAIN
DIRECT
BUTTERFLY DAMPER
BRANCH DUCT CONNECTIONS
R=2" MAX FOR DUCT WIDTHS 4" TO 12" 3" MAX FOR DUCT WIDTHS OVER 12"
45° MAX
15° MAX
OVER 45°
R
1"
TURNVANE
DUCT OFFSETS
MITER ELBOW

TYPICAL DUCT CONSTRUCTION DETAILS (C / M-2)

NOT TO SCALE

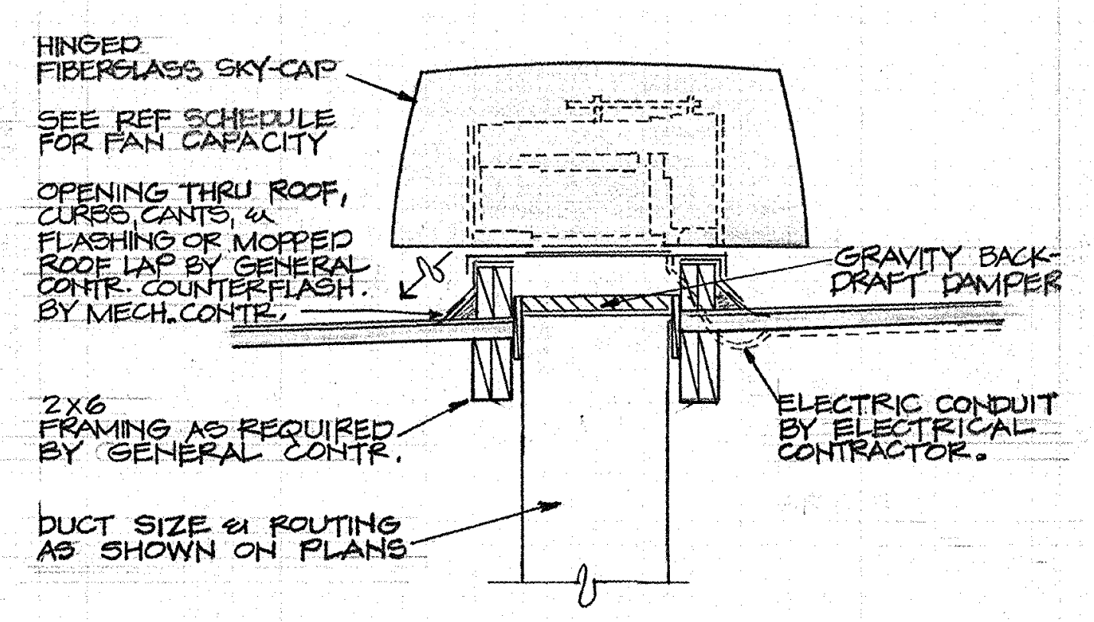
HINGED FIBERGLASS SKY-CAP
SEE REF SCHEDULE FOR FAN CAPACITY
OPENING THRU ROOF, CURBS, CANTS, & FLASHING OR MOPPED ROOF LAP BY GENERAL CONTR. COUNTERFLASH. BY MECH. CONTR.
GRAVITY BACK-DRAFT DAMPER
2x6 FRAMING AS REQUIRED BY GENERAL CONTR.
ELECTRIC CONDUIT BY ELECTRICAL CONTRACTOR.
DUCT SIZE & ROUTING AS SHOWN ON PLANS

TYPICAL REF INSTALLATION (D / M-2)

NOT TO SCALE

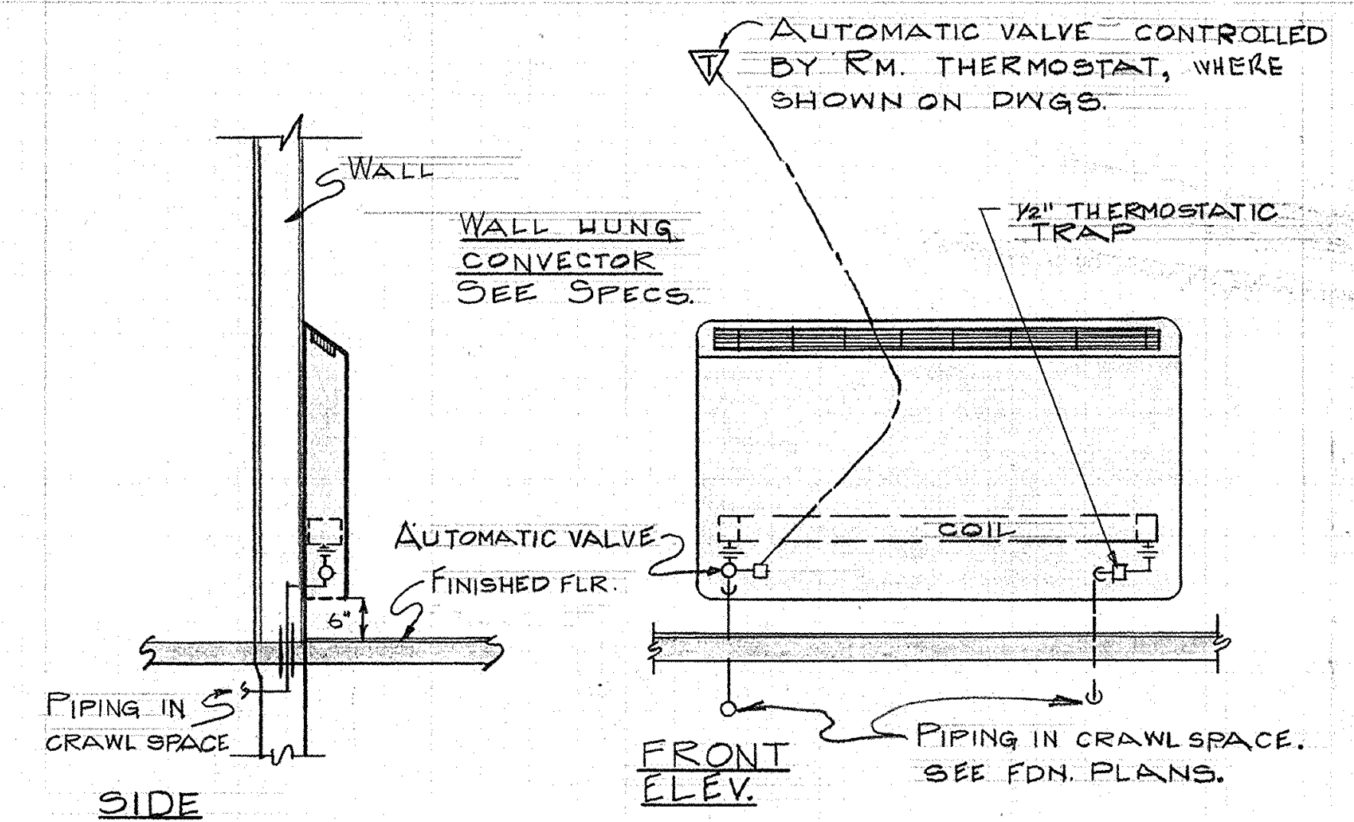
AUTOMATIC VALVE CONTROLLED BY RM. THERMOSTAT, WHERE SHOWN ON DWGS.
WALL
WALL HUNG CONVECTOR SEE SPECS.
1/2" THERMOSTATIC TRAP
AUTOMATIC VALVE
COIL
FINISHED FLR.
6"
PIPING IN CRAWL SPACE
SIDE ELEV.
FRONT ELEV.
PIPING IN CRAWL SPACE. SEE FDN. PLANS.

TYP. CONVECTOR INSTAL. DTL. (E / M-2)

NOT TO SCALE

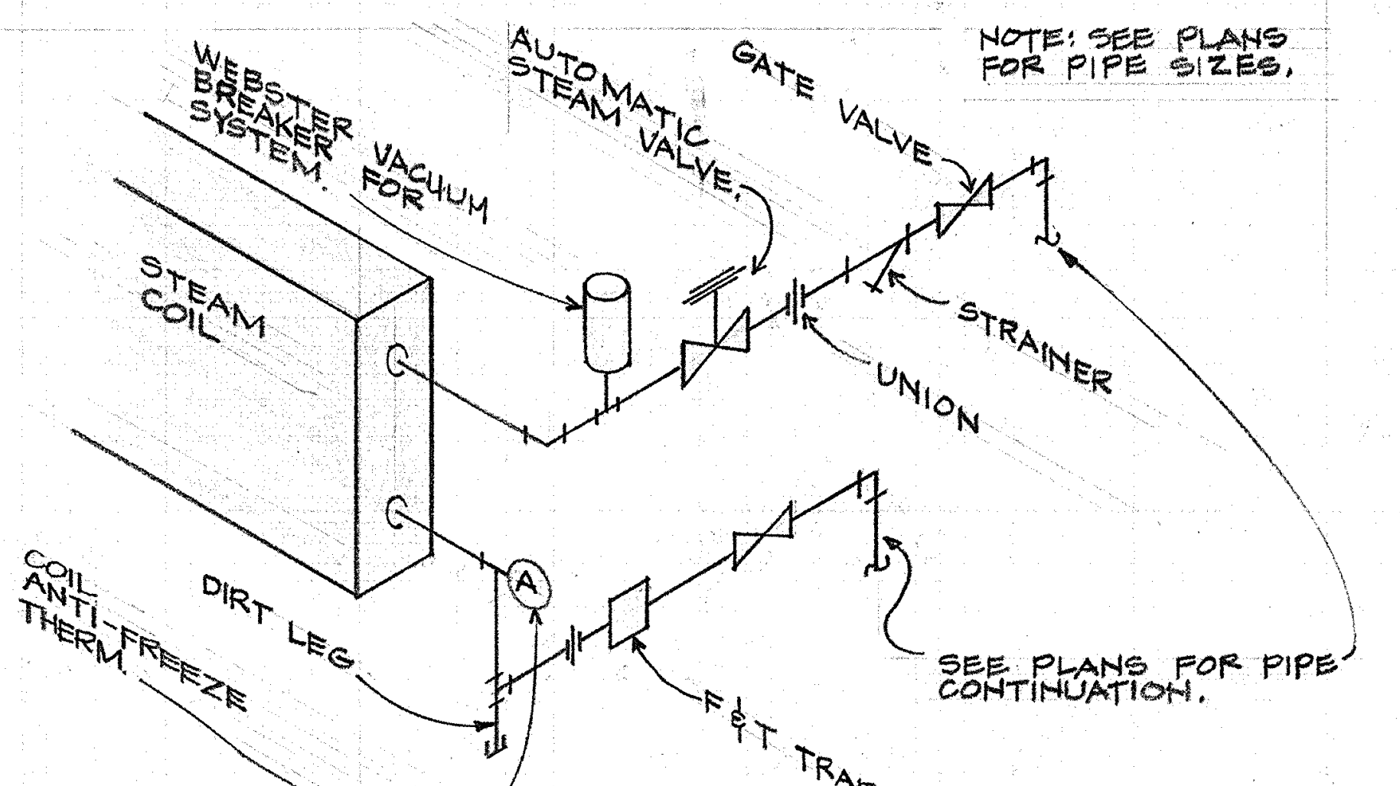
NOTE: SEE PLANS FOR PIPE SIZES.
WEBSTER VACUUM BREAKER FOR SYSTEM.
AUTOMATIC STEAM VALVE.
GATE VALVE
STEAM COIL
STRAINER
UNION
COIL ANTI-FREEZE THERM.
DIRT LEG
A
F&T TRAP
SEE PLANS FOR PIPE CONTINUATION.

STEAM COIL PIPING DIAGRAM (F / M-2)

NOT TO SCALE

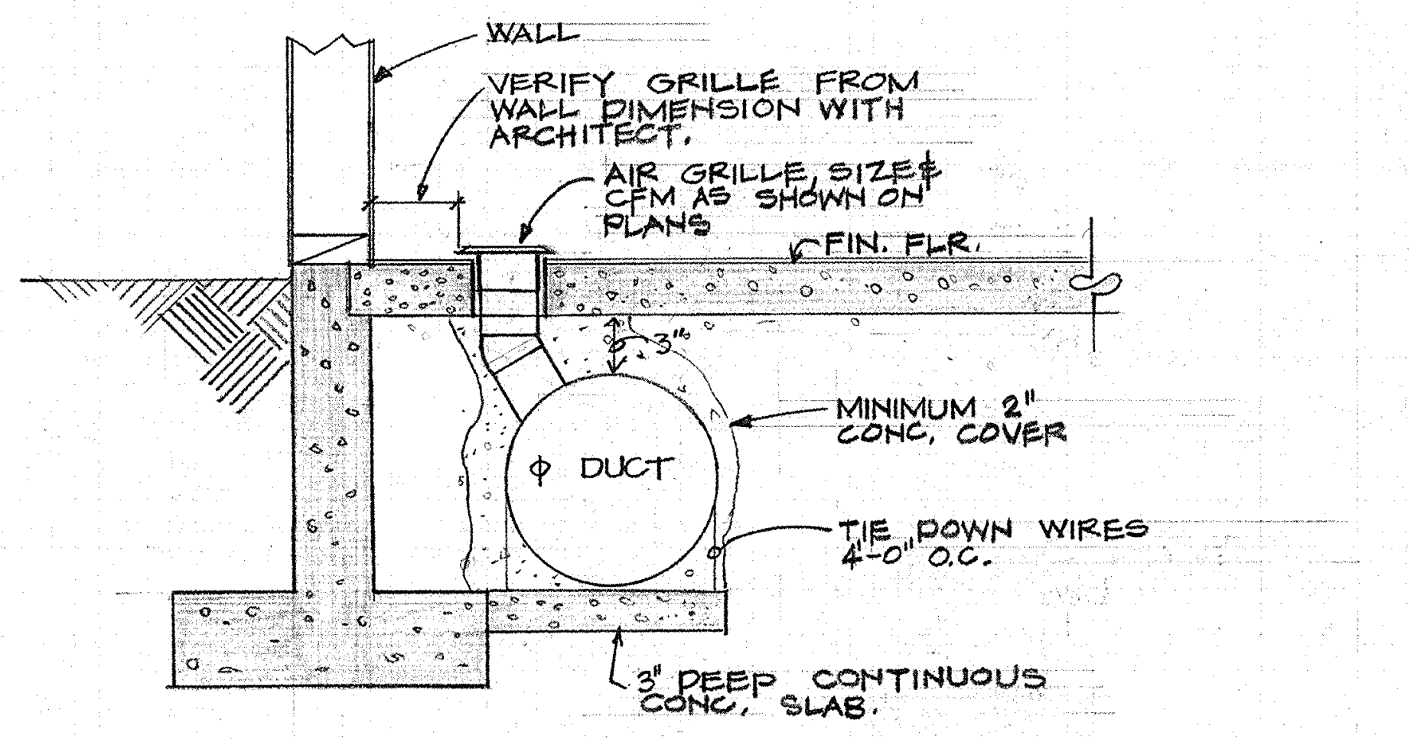
WALL
VERIFY GRILLE FROM WALL DIMENSION WITH ARCHITECT.
AIR GRILLE, SIZE & CFM AS SHOWN ON PLANS
FIN. FLR.
MINIMUM 2" CONC. COVER
φ DUCT
TIE DOWN WIRES 4'-0" O.C.
3" DEEP CONTINUOUS CONC. SLAB.

NOTES:

1. 3" CONC. SLAB POURED WITH TIE-DOWN WIRES 4'-0" O.C. FOR DUCT ANCHORAGE, DUCTS ENCASED IN 2" CONC. ALL CONC. WORK BY GEN'L. CONTRACTOR. EXCAVATION WORK BY MECH. CONTR.
2. MECH. CONTR. SHALL BE RESPONSIBLE FOR DUCT AND REGISTER BOOT ALIGNMENT WHILE CONCRETE IS POURED AND CURING.
3. VERIFY FOOTING DEPTHS & ELEVATIONS BEFORE INSTALLING DUCTS. VARY DUCT ROUTING TO SUIT FOOTING CONDITIONS.

UNDERFLOOR DUCT INSTALL. DETAIL (G / M-2)

NOT TO SCALE

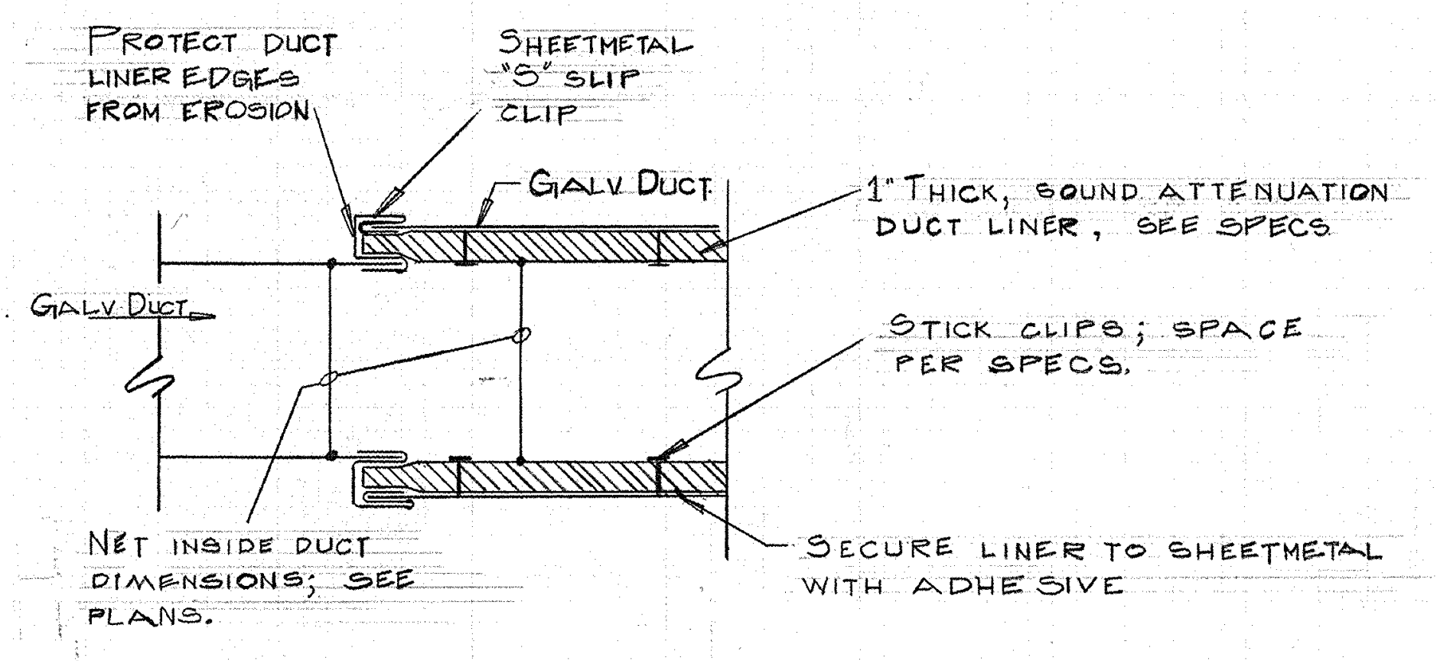
PROTECT DUCT LINER EDGES FROM EROSION
SHEETMETAL "S" SLIP CLIP
GALV. DUCT
1" THICK, SOUND ATTENUATION DUCT LINER, SEE SPECS
GALV. DUCT
STICK CLIPS; SPACE PER SPECS.
NET INSIDE DUCT DIMENSIONS; SEE PLANS.
SECURE LINER TO SHEETMETAL WITH ADHESIVE

SOUND ATTENUATION DUCT JOINT DETAIL (H / M-2)

NOT TO SCALE

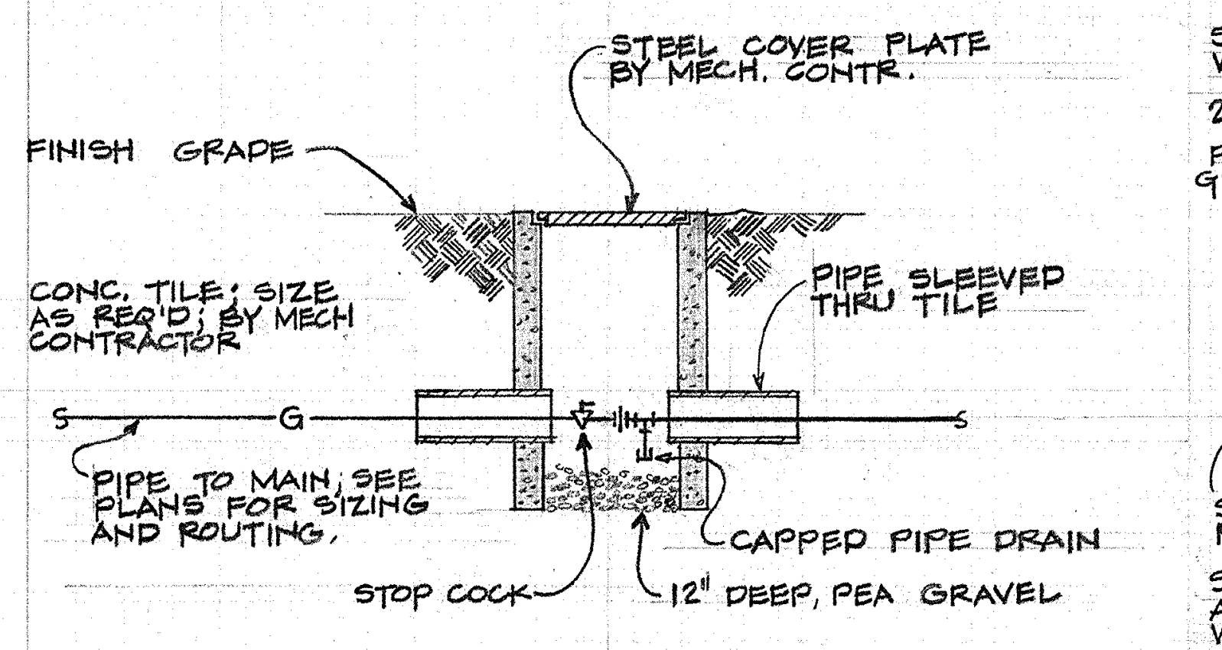
STEEL COVER PLATE BY MECH. CONTR.
FINISH GRADE
CONC. TILE; SIZE AS REQ'D. BY MECH CONTRACTOR
PIPE SLEEVED THRU TILE
G
PIPE TO MAIN, SEE PLANS FOR SIZING AND ROUTING.
CAPPED PIPE DRAIN
STOP COCK
12" DEEP, PEA GRAVEL

GAS COCK PIPE DETAIL (J / M-2)

NOT TO SCALE

NOTE: WHEN INSTALLED UNDERGROUND BENEATH BLDGS., GAS PIPING SHALL BE ENCASED IN TRANSITE PIPE, WHICH SHALL EXTEND INTO A NORMALLY USABLE AND ACCESSIBLE PORTION OF THE BLDG. AND AT THE POINT WHERE THE TRANSITE TERMINATES IN THE BLDG. THE SPACE BETWEEN THE TRANSITE AND GAS PIPING SHALL BE SEALED TO PREVENT POSSIBLE LEAKAGE. THE TRANSITE SHALL EXTEND AT LEAST 4" OUTSIDE THE BLDG. FOOTING WALL; BE VENTED AND BE INSTALLED IN SUCH A WAY AS TO PROHIBIT THE ENTRANCE OF WATER. THE ENTIRE INSTALLATION SHALL BE SUCH THAT THE GAS PIPING CAN BE READILY REPLACED WITHOUT DAMAGE TO TO THE BUILDING.

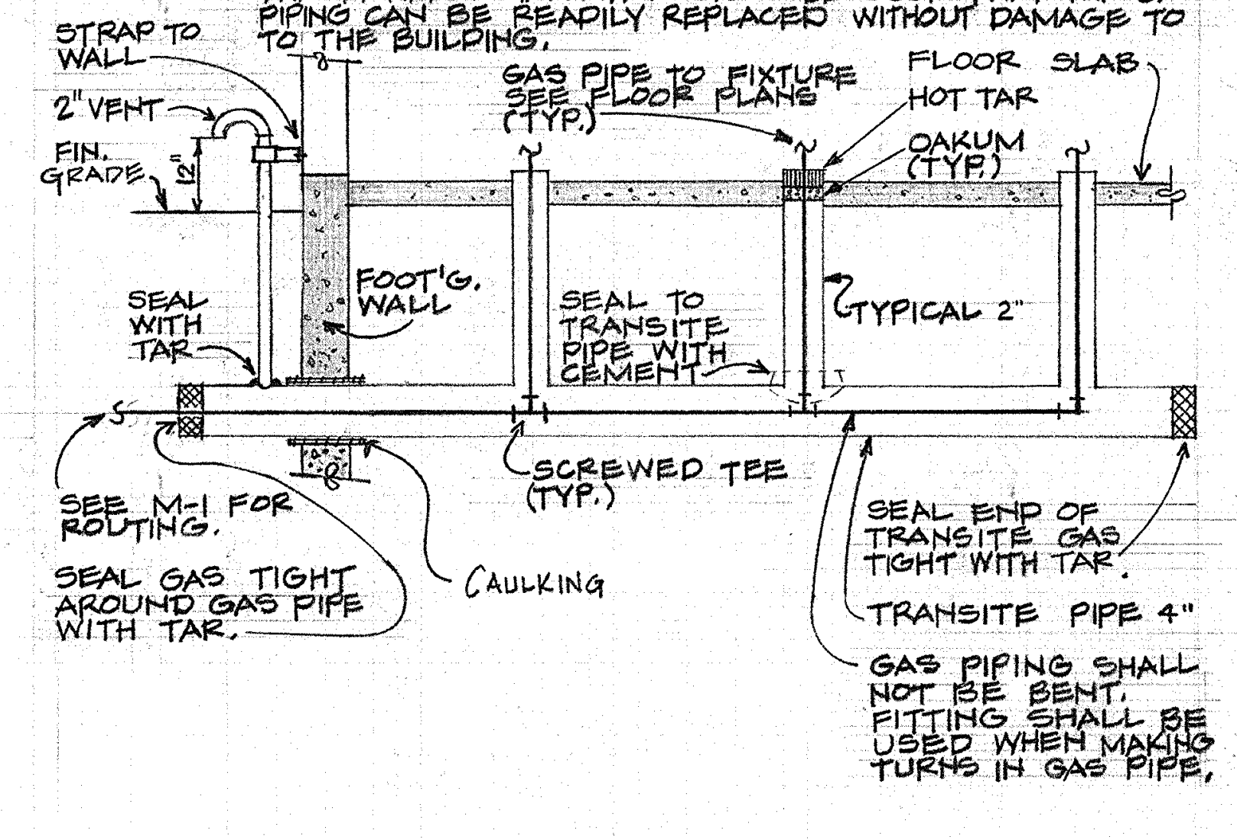
STRAP TO WALL
2" VENT
FIN. GRADE
12"
GAS PIPE TO FIXTURE SEE FLOOR PLANS (TYP.)
FLOOR SLAB
HOT TAR
OAKUM (TYP.)
SEAL WITH TAR
FOOT'G. WALL
SEAL TO TRANSITE PIPE WITH CEMENT
TYPICAL 2"
SEE M-1 FOR ROUTING.
SCREWED TEE (TYP.)
SEAL END OF TRANSITE GAS TIGHT WITH TAR.
SEAL GAS TIGHT AROUND GAS PIPE WITH TAR.
CAULKING
TRANSITE PIPE 4"
GAS PIPING SHALL NOT BE BENT. FITTING SHALL BE USED WHEN MAKING TURNS IN GAS PIPE.

GAS PIPE INSTALLATION DET'L (K / M-2)

NOT TO SCALE

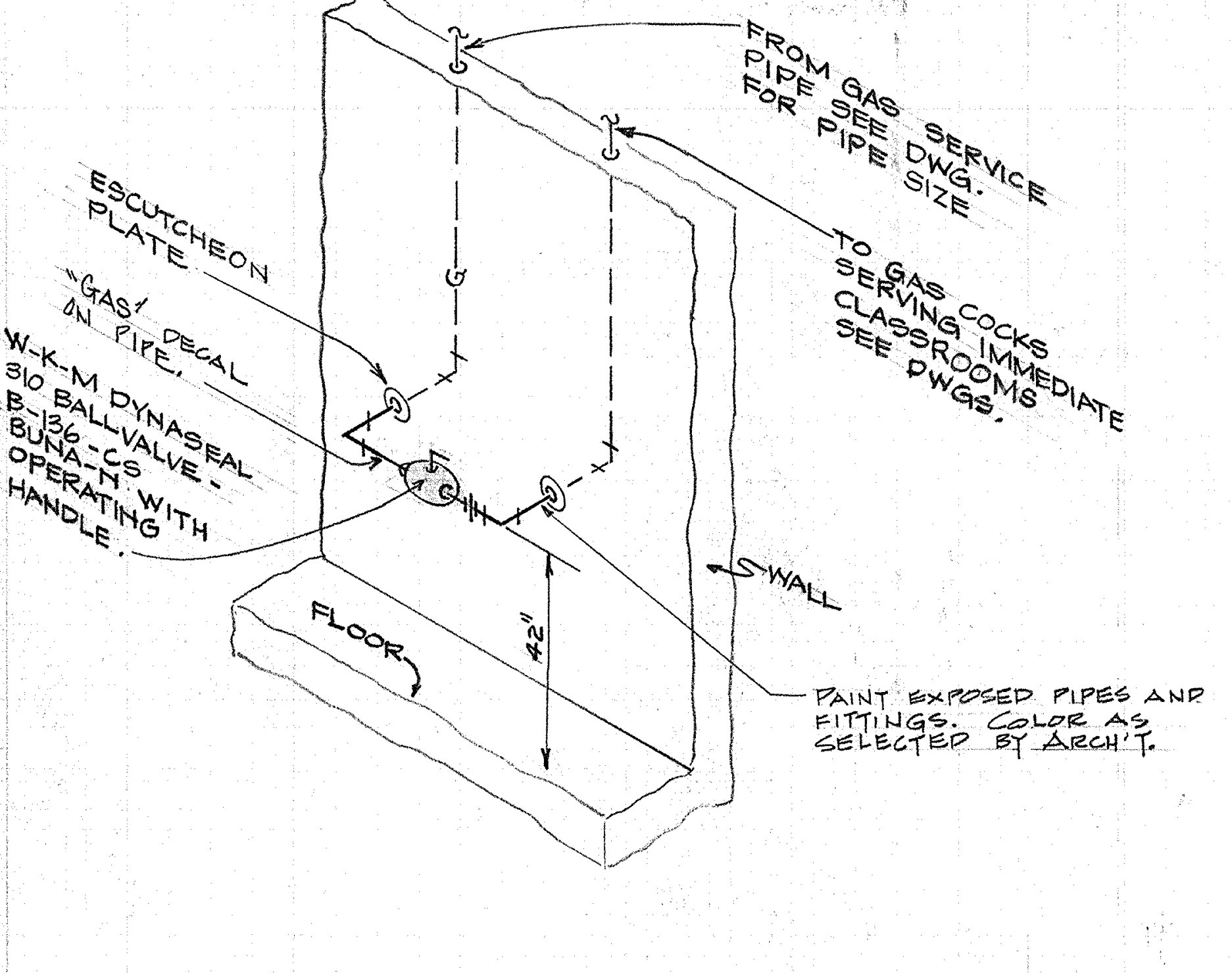
FROM GAS SERVICE PIPE SEE DWG. FOR PIPE SIZE
TO GAS COCKS SERVING IMMEDIATE CLASSROOMS SEE DWGS.
ESCUTCHEON PLATE
"GAS" DECAL ON PIPE.
W-K-M DYNASEAL 310 BALLVALVE - B-136-CS BUNA-N WITH OPERATING HANDLE.
G
WALL
FLOOR
42"
PAINT EXPOSED PIPES AND FITTINGS. COLOR AS SELECTED BY ARCH'T.

TYPICAL ROOM MASTER GAS VALVE (L / M-2)

NOT TO SCALE

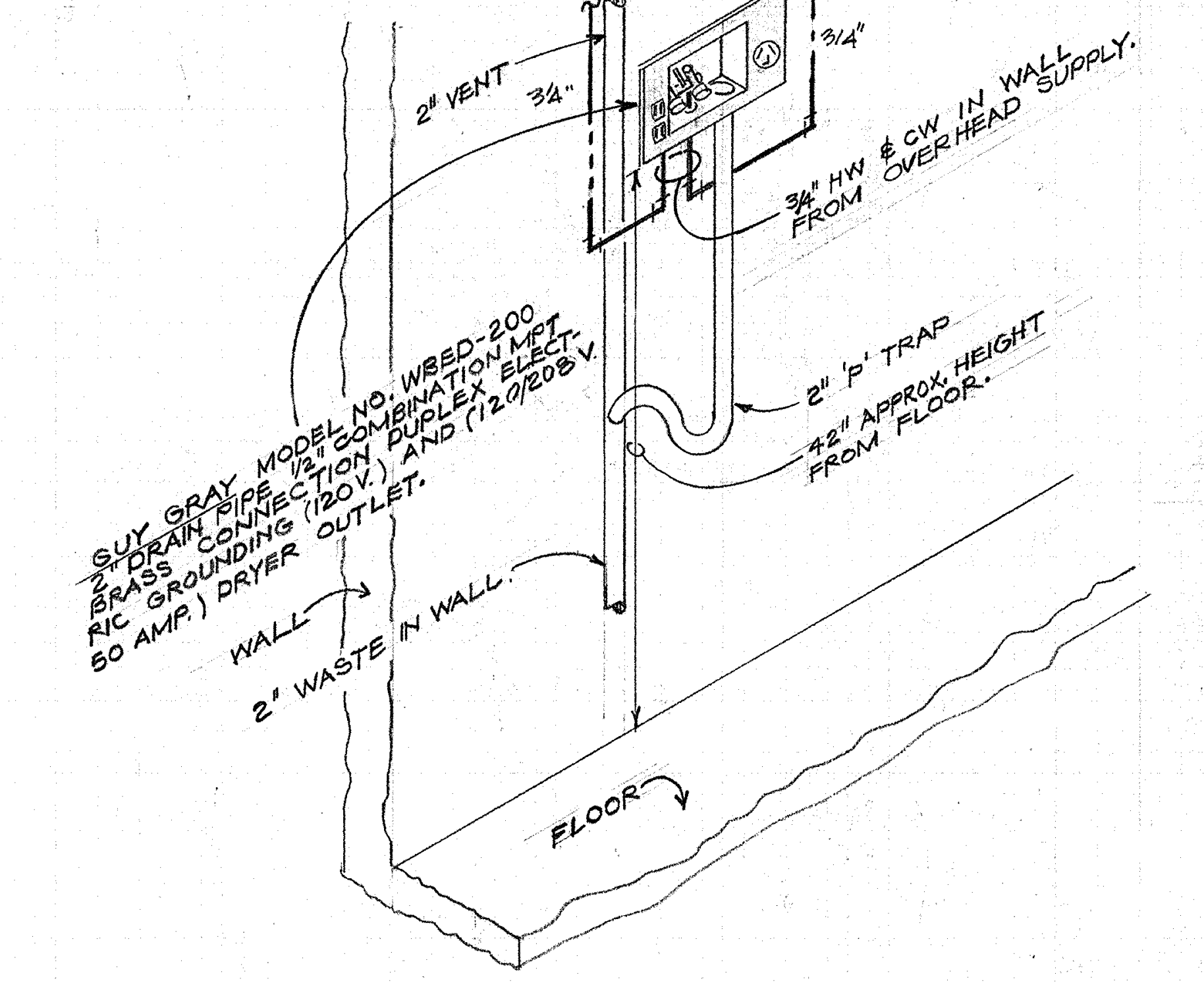
2" VENT
3/4"
3/4"
3/4" HW & CW IN WALL FROM OVERHEAD SUPPLY.
GUY GRAY MODEL NO. WBED-200 2" DRAIN PIPE 1/2" COMBINATION MPT BRASS CONNECTION DUPLEX ELECTRIC GROUNDING (120V.) AND (120/208V. 50 AMP.) DRYER OUTLET.
2" 'P' TRAP
42" APPROX. HEIGHT FROM FLOOR.
WALL
2" WASTE IN WALL.
FLOOR

AUTO. WASHER CONNECTION DETAIL (M / M-2)

NOT TO SCALE

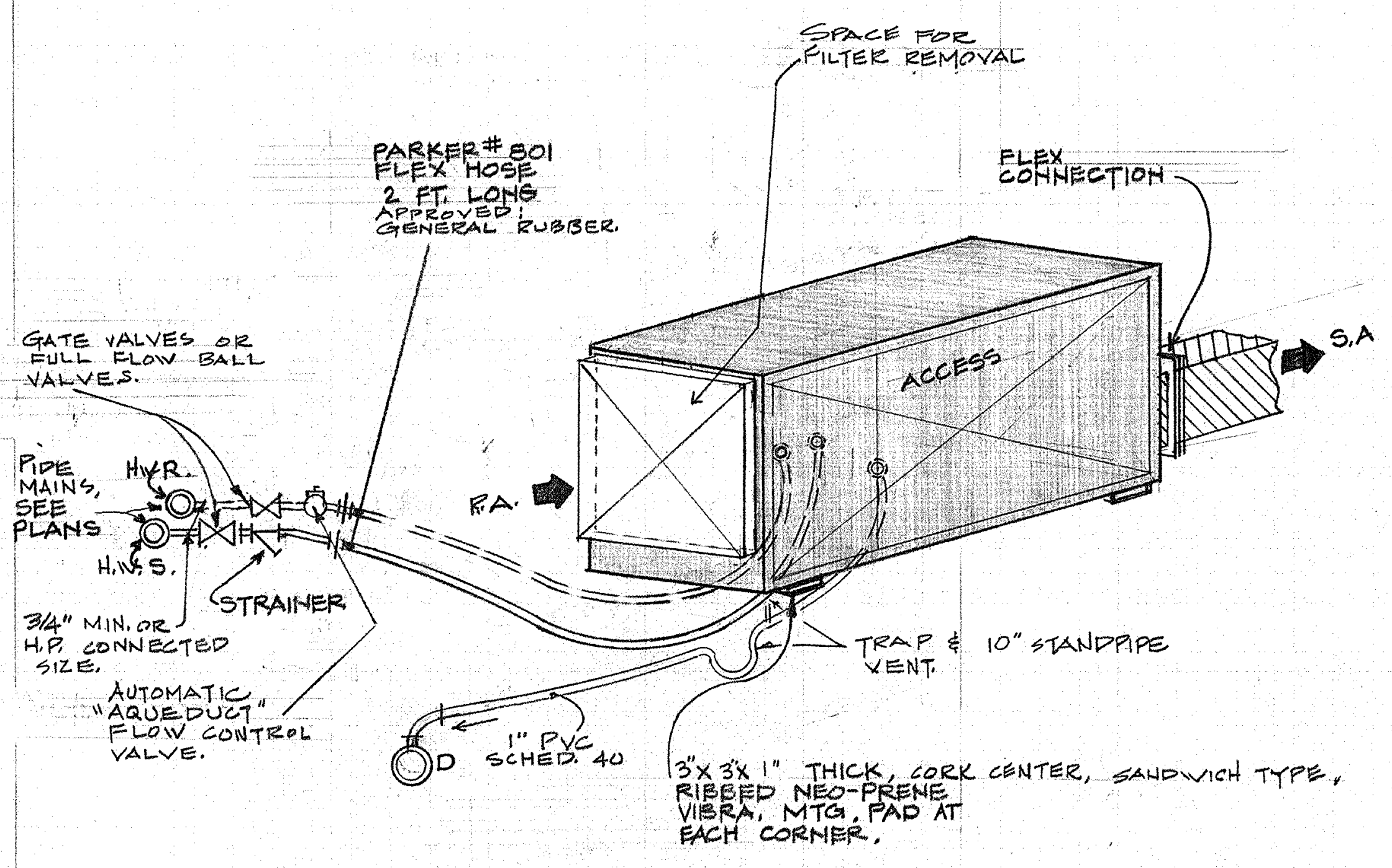
SPACE FOR FILTER REMOVAL
FLEX CONNECTION
PARKER #801 FLEX HOSE 2 FT. LONG APPROVED: GENERAL RUBBER.
GATE VALVES OR FULL FLOW BALL VALVES.
ACCESS
S.A
R.A.
PIPE MAINS, SEE PLANS
H.W.R.
H.W.S.
STRAINER
3/4" MIN. OR H.P. CONNECTED SIZE.
AUTOMATIC "AQUEDUCT" FLOW CONTROL VALVE.
TRAP & VENT
10" STANDPIPE
1" PVC SCHED. 40
D
3"x3"x1" THICK, CORK CENTER, SANDWICH TYPE, RIBBED NEO-PRENE VIBRA. MTG. PAD AT EACH CORNER.

FLOOR MTD. HEAT PUMP INSTALLATION (N / M-2)

NOT TO SCALE

3365
R. F. Marquess
NOV. 7, 1952
ROBERT F. MARQUESS

DETAILS & SCHEDULES
SWEET HOME HIGH SCHOOL
ADDITIONS AND ALTERATIONS 1974
DISTRICT 55 LINN COUNTY, OREGON

ARCHITECTS
HAMLIN, MARTIN, SCHULTZ & GEYER
AIA
159 W. 12TH EUGENE, OREGON 97401

M 2
JOB NO.

CLARE K. HAMLIN
Clare K Hamlin
EUGENE, OREGON

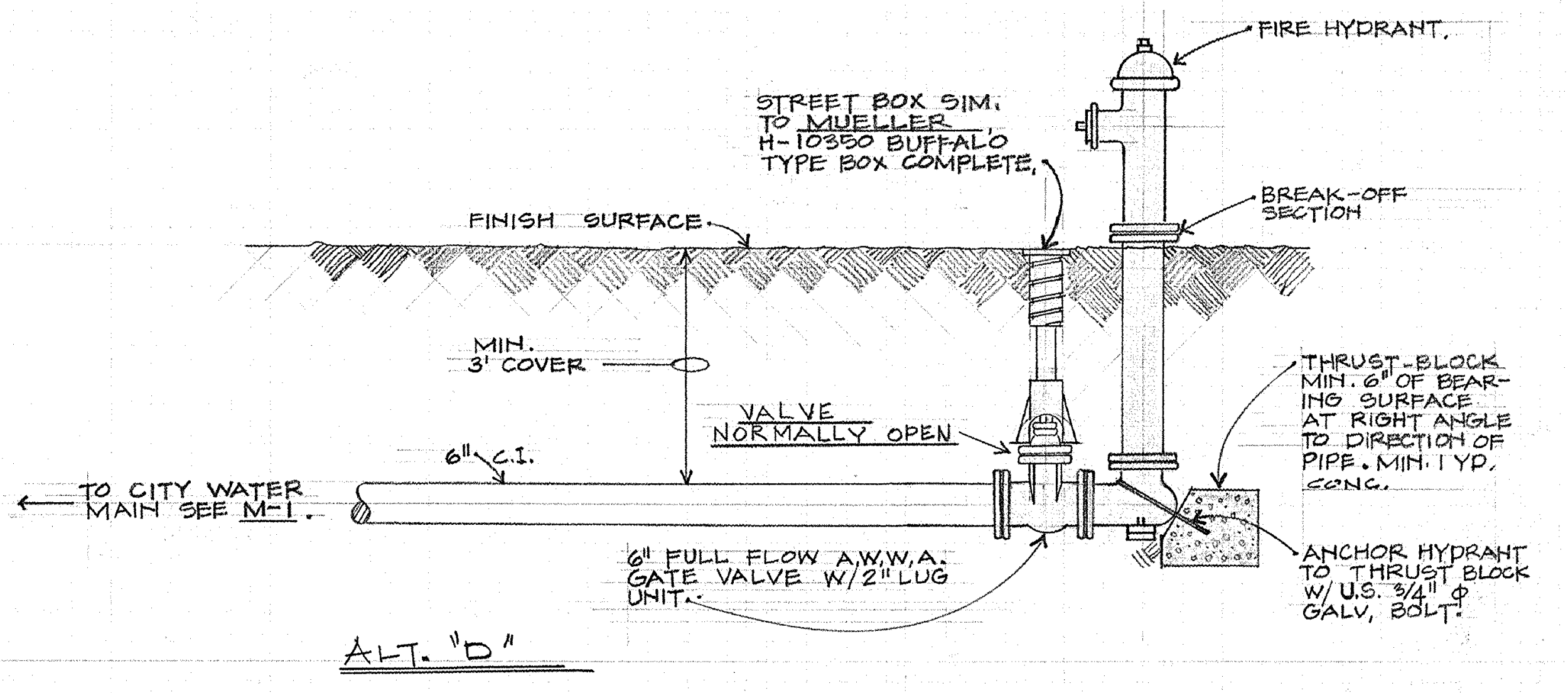
FIRE HYDRANT.
STREET BOX SIM. TO MUELLER H-10350 BUFFALO TYPE BOX COMPLETE.
BREAK-OFF SECTION
FINISH SURFACE
MIN. 3' COVER
VALVE NORMALLY OPEN
THRUST-BLOCK MIN. 6" OF BEARING SURFACE AT RIGHT ANGLE TO DIRECTION OF PIPE. MIN. 1 YD. CONC.
6" C.I.
← TO CITY WATER MAIN SEE M-1.
6" FULL FLOW A.W.W.A. GATE VALVE W/2" LUG UNIT.
ANCHOR HYDRANT TO THRUST BLOCK W/ U.S. 3/4" ϕ GALV. BOLT.
ALT. "D"

FIRE HYDRANT INSTALLATION DETAIL (B / M-3)

NOT TO SCALE

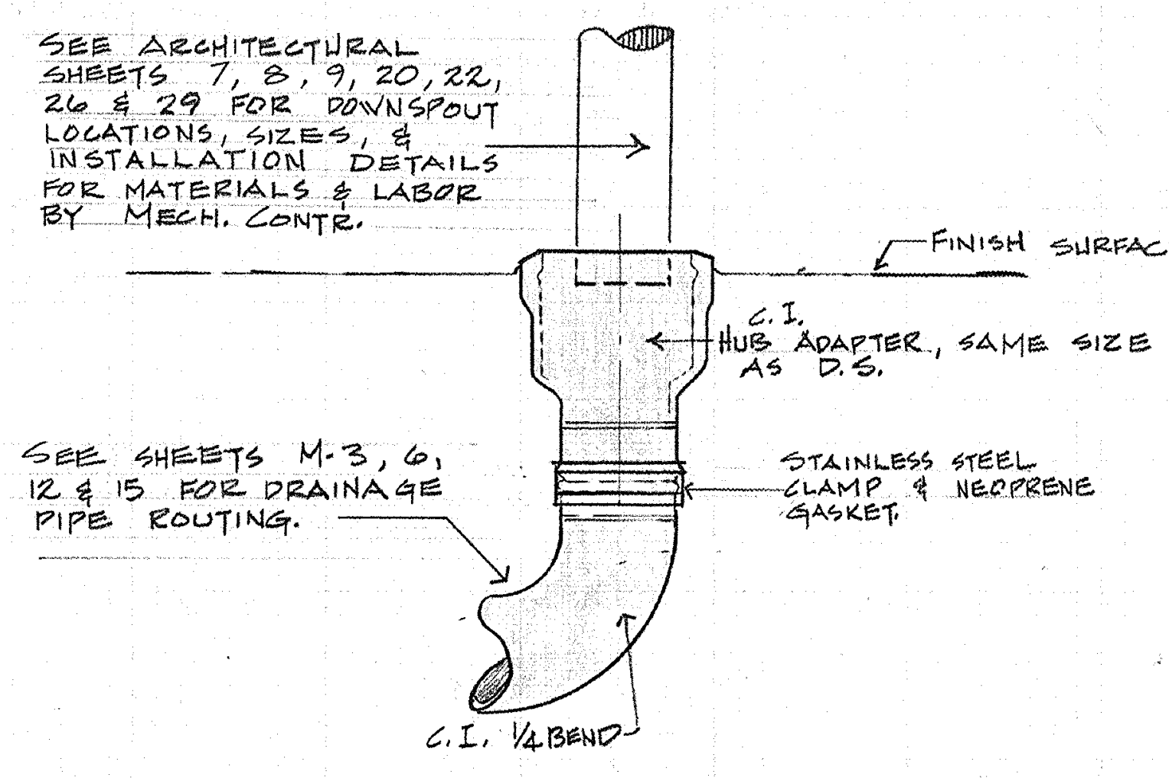
SEE ARCHITECTURAL SHEETS 7, 8, 9, 20, 22, 26 & 29 FOR DOWNSPOUT LOCATIONS, SIZES, & INSTALLATION DETAILS FOR MATERIALS & LABOR BY MECH. CONTR.
FINISH SURFACE
C.I. HUB ADAPTER, SAME SIZE AS D.S.
SEE SHEETS M-3, 6, 12 & 15 FOR DRAINAGE PIPE ROUTING.
STAINLESS STEEL CLAMP & NEOPRENE GASKET.
C.I. 1/4 BEND

DOWNSPOUT (D.S.) TO HUB CONNECTION DTL. (A / M-3)

NOT TO SCALE

DUCT STEAM HEATING COIL SCHEDULE

DC No.	LOCATION	CFM	MAXIMUM FACE VELOC.	AIR TEMP. RISE W/ 2 PSI STM.	CONTROL & LOCATION	REMARKS
DC-1	SECTOR 'A' HV-1	700	650 fpm	55°F. TO 120°F.	ROOM THERMOSTAT RM. A1	
DC-2	SECTOR 'A' HV-1	800	650 fpm	55°F TO 120°F	ROOM THERMOSTAT RM. A12	
DC-3	SECTOR 'A' HV-1	2400	650 fpm	55°F TO 120°F.	ROOM THERMOSTAT RM. A13	
DC-4	SECTOR 'A' HV-1	200	650 fpm	55°F TO 120°F.	ROOM THERMOSTAT RM. A7	
DC-5	SECTOR 'A' HV-1	800	650 fpm	55°F. TO 120°F.	ROOM THERMOSTAT RM. A3	
DC-6	SECTOR 'C' HV-5	1350	650 fpm	55°F. TO 115°F.	ROOM THERMOSTAT RM. C13	
DC-7	SECTOR 'C' HV-5	1470	650 fpm	55°F. TO 115°F	ROOM THERMOSTAT RM. C20	
DC-8	SECTOR 'D' Ⓔ H&V-A	500	650 fpm	55°F. TO 115°F.	ROOM THERMOSTAT RM. D4	CUT Ⓔ DUCT AND INSTALL WITH TRANSITIONS.

REMOVE Ⓔ PCR PIPE FROM Ⓔ RECEIVER. CONNECT NEW 2" PCR.
SEE 1/M-5
18ϕ
16ϕ
14
12ϕ
CR
CONNECT TO Ⓔ 1 1/2 CR IN CRAWL SPACE
CONNECT NEW 6" STM TO TWO Ⓔ 4" STM. PIPES.
6"
4"
4"
3"
2" PCR UP
Ⓔ STEAM PIPES UP
REMOVE ABANDON PIPING IN CRAWLSPACE
CRAWLSPACE
8ϕ
8ϕ
8ϕ
6ϕ
8ϕ
8ϕ
20ϕ
12ϕ
14ϕ
22ϕ
1 1/2
PCR
2"
S
6"
Ⓔ 2" CW
3/4"
CONNECT TO Ⓔ CW PIPE
2"
2"
24x16
C.O.
4"
1 1/2"
30 x 24 UP IN CHASE
CRAWL SPACE
Ⓔ PIPE
Ⓔ PIPES
6"
3"
2 1/2"
1" DRIP TRAP ASSEMBLIES B/M-2
1 1/4
CONNECT TO Ⓔ 1 1/2 CR.
CAP Ⓔ PIPE
CONNECT TO Ⓔ 4" W. IN CRAWLSPACE
2"CW
3" STM
2" PCR
6" STM
CAP Ⓔ PIPES
2 1/2"
SEE 1/M-6
FCO
4" C.I.
F.C.O.
6" C.I.
4" C.I.
FCO
CONNECT TO Ⓔ 4" W. VERIFY LOCATION.
CONNECT TO Ⓔ 2" CW IN CRAWL SPACE, BY MECH. CONTR.
6" CONC.
SLOPE EVENLY TO Ⓔ PIPE IN STREET.
SEE 1/M-6
A
N

FOUNDATION PLAN

SECTOR 'A'

1/8" = 1'0"

1 / M-3

REGISTERED PROFESSIONAL ENGINEER 3365 OREGON NOV. 7, 1952 ROBERT F. MARQUESS
R. F. Marquess

FOUNDATION MECH - SECTOR A

SWEET HOME HIGH SCHOOL
ADDITIONS AND ALTERATIONS 1974
DISTRICT 55 LINN COUNTY, OREGON

ARCHITECTS
HAMLIN, MARTIN,
SCHULTZ & GEYER
AIA
159 W. 12TH EUGENE, OREGON 97401

M
3
JOB NO.

REGISTERED ARCHITECT CLARE K. HAMLIN EUGENE, OREGON STATE OF OREGON
Clare K Hamlin

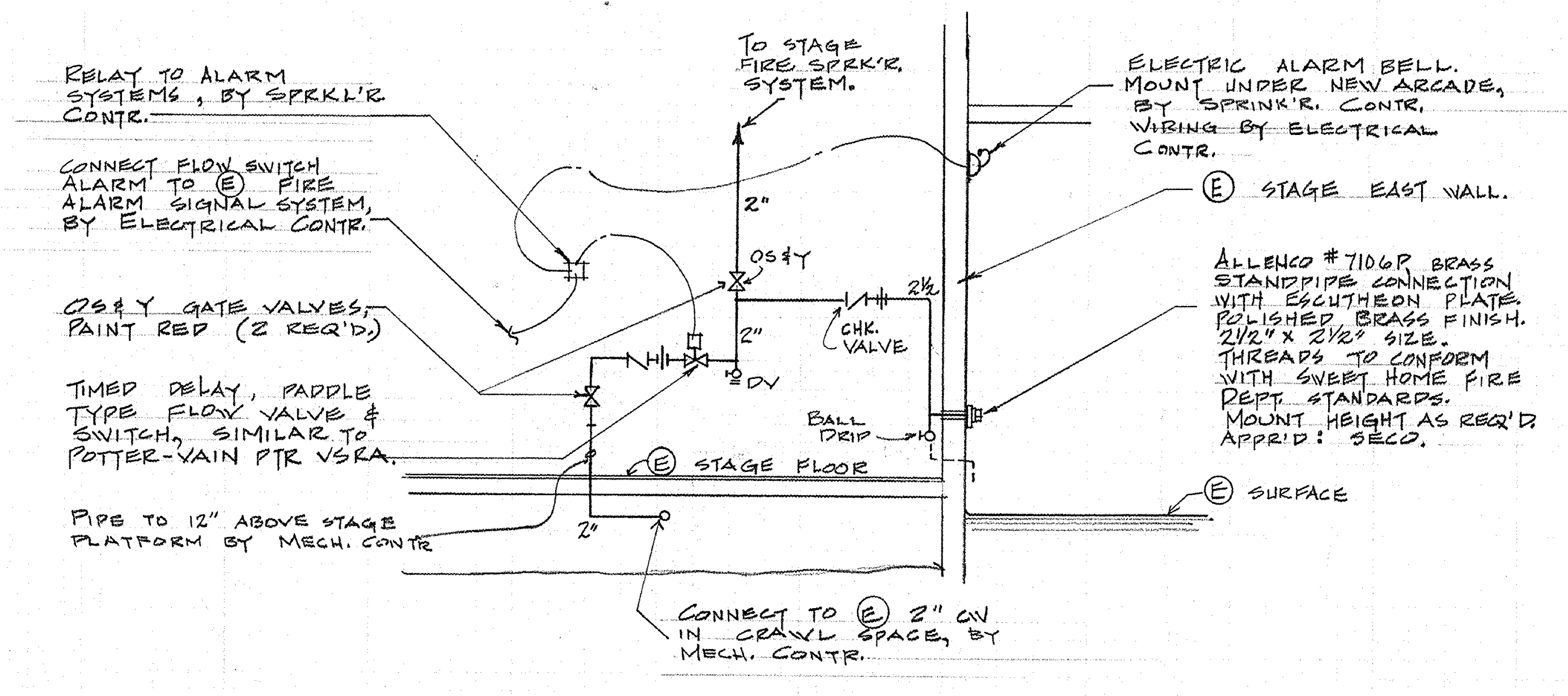
RELAY TO ALARM SYSTEMS, BY SPRKL'R CONTR.
CONNECT FLOW SWITCH ALARM TO Ⓔ FIRE ALARM SIGNAL SYSTEM, BY ELECTRICAL CONTR.
OS&Y GATE VALVES, PAINT RED (2 REQ'D.)
TIMED DELAY, PADDLE TYPE FLOW VALVE & SWITCH, SIMILAR TO POTTER-VAIN PTR VSRA.
PIPE TO 12" ABOVE STAGE PLATFORM BY MECH. CONTR.
TO STAGE FIRE SPRK'R. SYSTEM.
2"
OS&Y
2"
DV
2½
CHK. VALVE
BALL DRIP
Ⓔ STAGE FLOOR
2"
CONNECT TO Ⓔ 2" CW IN CRAWL SPACE, BY MECH. CONTR.
ELECTRIC ALARM BELL. MOUNT UNDER NEW ARCADE, BY SPRINK'R. CONTR. WIRING BY ELECTRICAL CONTR.
Ⓔ STAGE EAST WALL.
ALLENCO #7106P BRASS STANDPIPE CONNECTION WITH ESCUTHEON PLATE. POLISHED BRASS FINISH. 2½" × 2½" SIZE. THREADS TO CONFORM WITH SWEET HOME FIRE DEPT. STANDARDS. MOUNT HEIGHT AS REQ'D. APPR'D: SECO.
Ⓔ SURFACE

FIRE SPRINKLER SYSTEM PIPING DIAGRAM (A/M-4)

NOT TO SCALE

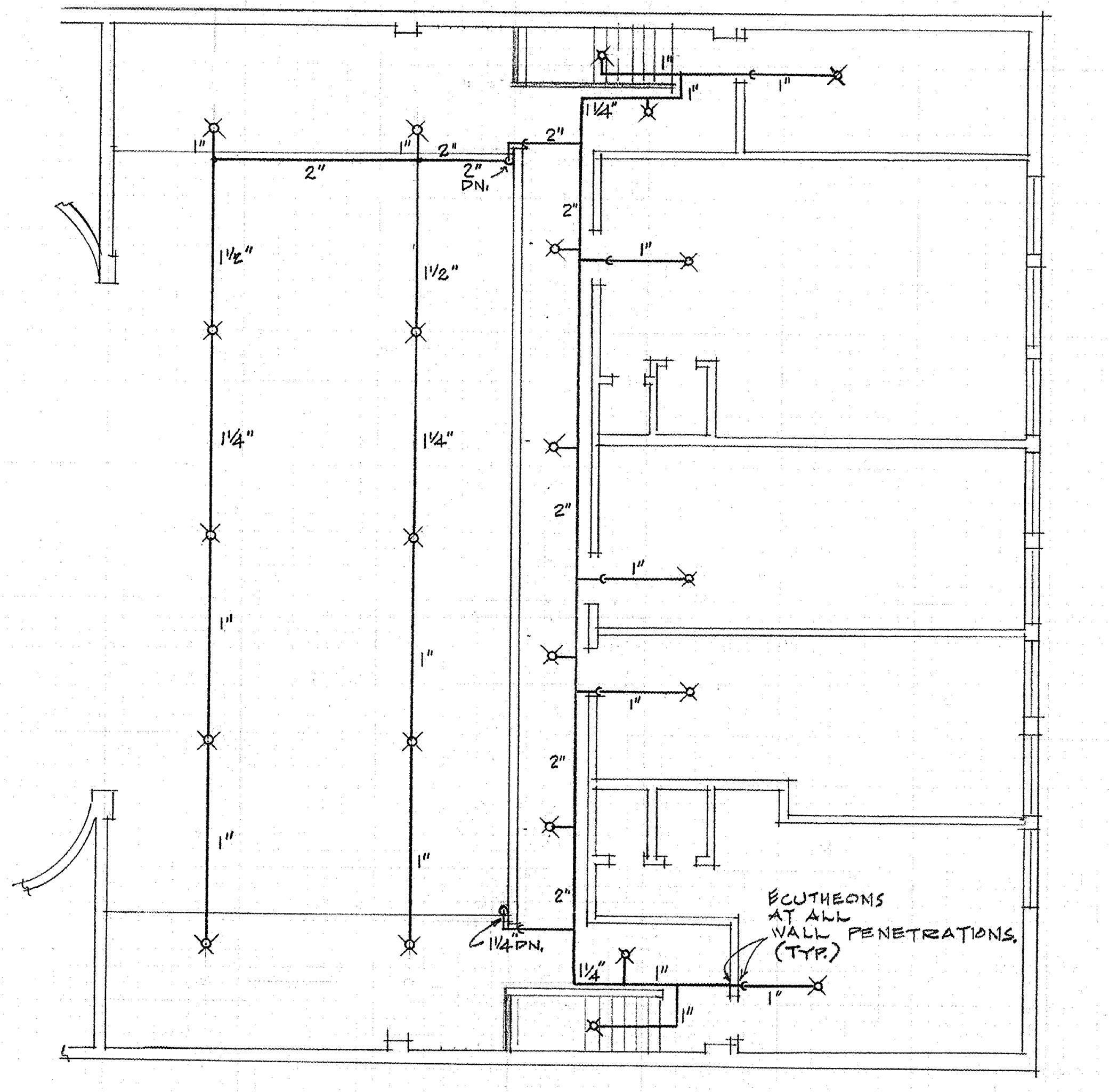
1"
2"
1"
2"
2" DN.
2"
1¼"
1"
1"
1"
1½"
1½"
1¼"
1¼"
1"
1"
1"
1"
1"
1"
2"
2"
2"
2"
1¼" DN.
1¼"
1"
1"
1"
ECUTHEONS AT ALL WALL PENETRATIONS. (TYP.)

UPPER FLOOR & STAGE PLAN FIRE SPRINKLERS (2/M-4)

1/8" = 1'0"

A12
A11
A10
A9
A13
A14
A18
Ⓔ BOILER
Ⓔ BOILER
Ⓔ BOILER
A19
Ⓔ HEATER
2 TO REMAIN.
CAP OFF 2" HW PIPE RISER ROUTED TO FLOOR.
Ⓔ HW
Ⓔ HW STORAGE TANK. ②
13'6" × 3'6"φ SIZE
A20
2½"
CONNECT TO Ⓔ 2½" RISER, WITH ELECTRIC UNION
VALVE
REMOVE Ⓔ HWR PUMP AND INSTALL NEW HWR PUMP. 19.
Ⓔ ¾" HWR
FD-2
Ⓔ TO UNDER FLOOR SLAB
3"
Ⓔ F.D.
MECH. CONTR. SHALL CUT AND PATCH CONCRETE FLOOR TO INSTALL NEW FLOOR DRAIN IN Ⓔ BOILER ROOM.
PIPE IN ATTIC
OVERHEAD PIPE
A17
INSULATED ALL OF Ⓔ EXPOSED 2" PIPE, INTERIOR & EXTERIOR.
2"
Ⓔ PIPES
A15
A16
A8
A7
2" V.T.R.
¾"
¾"
L.
L.
A6
S.S.
A
A5
U.
U.
U.
W.C.3
W.C.1
1"
2" V.
4" V.T.R.
1½" CW HEADER IN CHASE.
WC-3
W.C.1
W.C.1
W.C.1
F.D.-1
½"
A4
1½" V.T.R.
¾
2½"
A3
A2
A24
2½"
2½" HW DN. EXPOSED
A1
S
S
S
EXISTING 4"
1"
¾"
ALARM BELL.
FIRE DEPT. STANDPIPE CONNECTION.
UPRIGHT UNDER STAIR
PENDANT UNDER UPPER PLATFORM
VALVE STATION, SEE A/M-4
2" PIPE RISER TO UPPER FLOOR, SEE 2/M-4
A24
A25
A21
A22
A23
PENDANT UNDER PLATFORM
1"
1"
1¼"
1"
PIPE DROP FROM UPPER FLOOR.
UPRIGHT UNDER STAIR
Ⓔ SIDEWALK
N
A

PLUMBING FLOOR PLAN SECTOR 'A' (1/M-4)

1/8" = 1'0"

REGISTERED PROFESSIONAL ENGINEER
9365
R. F. Marques
NOV. 7, 1962
ROBERT F. MARQUESS

PLMBG - SECTOR A

SWEET HOME HIGH SCHOOL
ADDITIONS AND ALTERATIONS 1974
DISTRICT 55 LINN COUNTY, OREGON

ARCHITECTS
HAMLIN, MARTIN, SCHULTZ & GEYER
AIA
159 W. 12TH EUGENE, OREGON 97401

M
4
JOB NO.

REGISTERED ARCHITECT
CLARE K. HAMLIN
Clare K Hamlin
EUGENE, OREGON
STATE OF OREGON

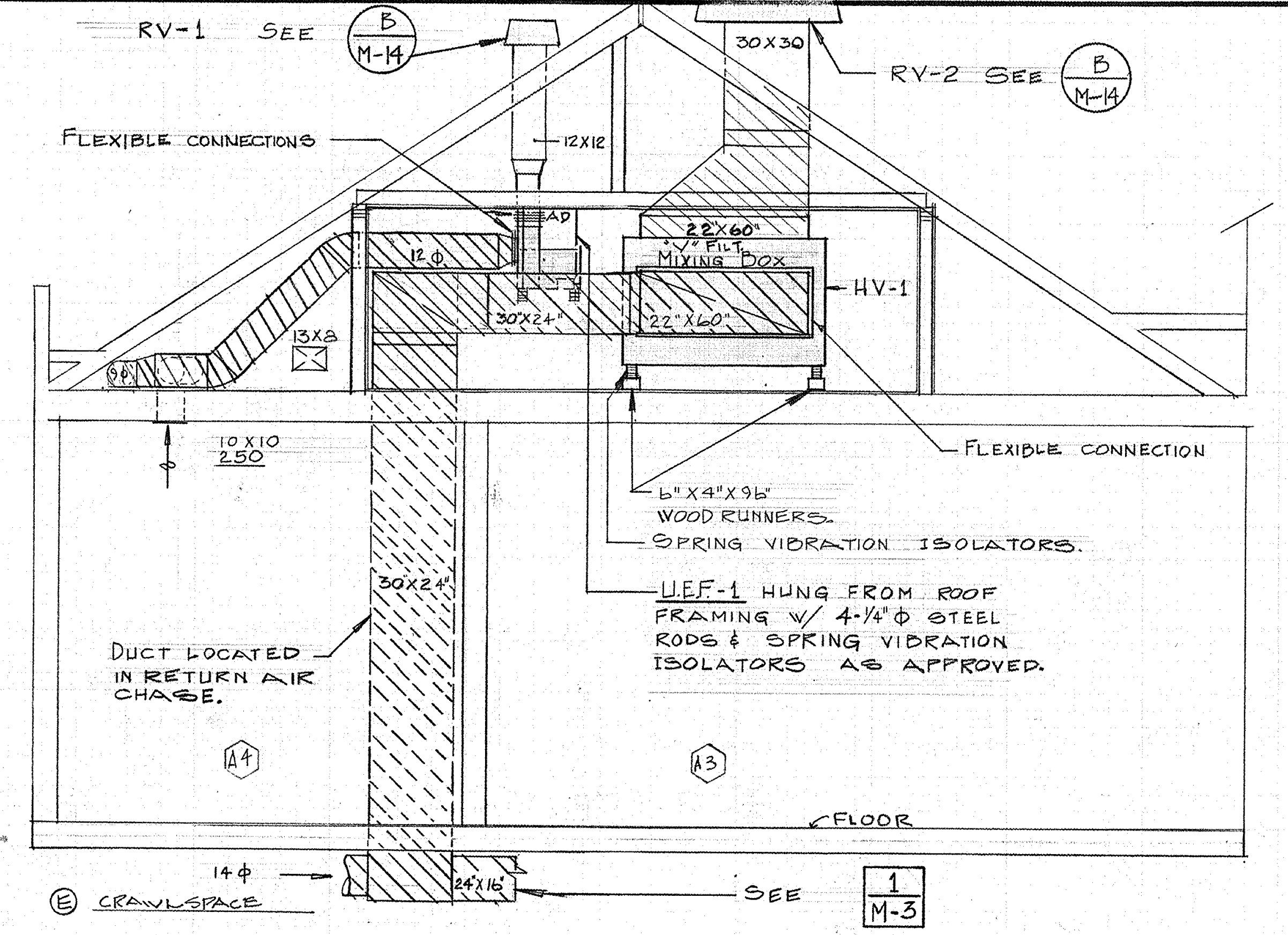
RV-1 SEE B/M-14
RV-2 SEE B/M-14
30X30
12X12
FLEXIBLE CONNECTIONS
22"X60"
"V" FILT.
MIXING BOX
HV-1
AD
12 ϕ
30"X24"
22"X60"
13X8
9ϕ
10 X 10
250
FLEXIBLE CONNECTION
6"X4"X96"
WOOD RUNNERS.
SPRING VIBRATION ISOLATORS.
U.E.F.-1 HUNG FROM ROOF FRAMING W/ 4-¼"ϕ STEEL RODS & SPRING VIBRATION ISOLATORS AS APPROVED.
30X24"
DUCT LOCATED IN RETURN AIR CHASE.
A4
A3
FLOOR
14 ϕ
24"X16"
Ⓔ CRAWLSPACE
SEE 1/M-3

SECTION

A/M-5

1/4" = 1'0"

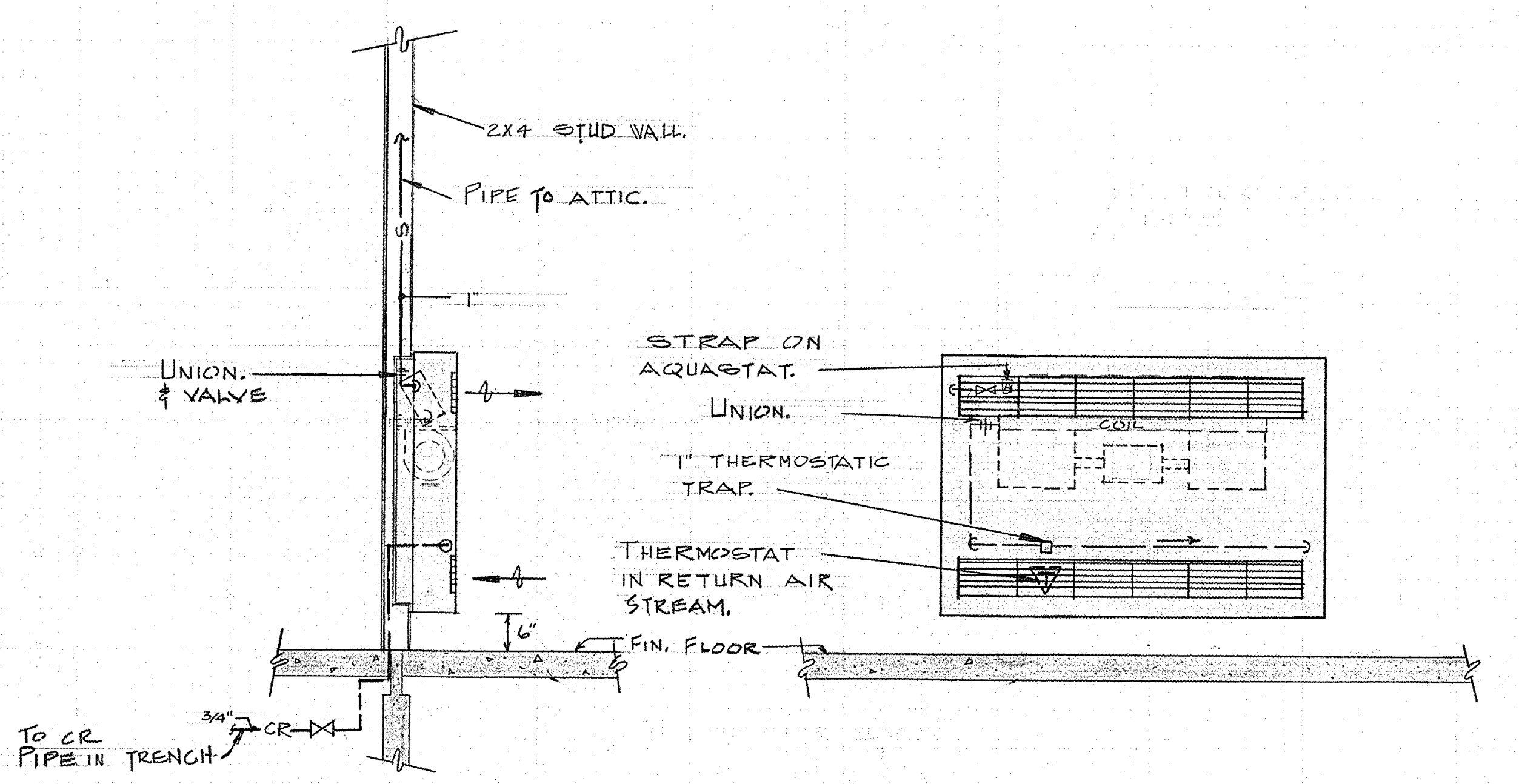
2X4 STUD WALL.
PIPE TO ATTIC.
1"
UNION. & VALVE
STRAP ON AQUASTAT.
UNION.
COIL
1" THERMOSTATIC TRAP.
THERMOSTAT IN RETURN AIR STREAM.
6"
FIN. FLOOR
3/4"
CR
TO CR PIPE IN TRENCH

TYPICAL C.U.H.-1 INSTALLATION DETAIL

B/M-5

Ⓔ PIPE RISERS IN ROOM 3
SEE 1/M-3
2-4X10
80 EA.
6X9
3W
160
A12
DC-2
ST
11-6X14
215 EA.
9X5
15X11
15X7
6X9
3W
150
6X12
150
A11
6X9
3W
140
A10
8X5
6X10
140
14X5
18X12
20X5
5-15X15
4W
470 EA.
A13
A14
COORDINATE DIFFUSER LAYOUT WITH SUSPENDED ACOUSTICAL CEILING, SEE SHEET 4.
14X12
15X7
30X12
A9
2-4X10
95 EA.
9X9
2W
185
12X8
6X8
DC-3
CONNECT TO Ⓔ 2" STEAM IN ATTIC.
6X8
15X8
26X18
9X9
3W
190
A7
A15
9X9
3W
165
6X12
165
A8
6X14
190
2"
1¼"
DC-2 F/M-2
DC-3
ST
FD
A5
2"
1½"
DC-4 F/M-2
1¼"
9X12
15X15
3W
500
9X9
3W
170
A6
DC-1 F/M-2
1½ CR DOWN TO CRAWLSPACE.
3/4"
1¼"
2-10X10
250 EA.
9ϕ
12ϕ
13X8
30X20
HV-1
9X12
12X12
26X12
DC-5 F/M-2
A4
A/M-5
A/M-5
DC-5
24X20
MD
18X8
UEF-1
7ϕ
8X5
160
A27
9X9
3W
190
24X24
1800
8X6
30X30 UP TO RV-2 OSA B/M-14
MECH. CONTR. SHALL BE RESPONSIBLE FOR HAVING CONSTRUCTED AND INSTALLING SUITABLE STAIR ACCESS OVER 26 X12 DUCT.
DUCT SIZES AT SPLITTER DAMPERS, LEFT TO RIGHT:
7 X 22
7 X 22
17 X 22
4 X 22
12 X 22
A3
A26
10X6
A2
7X6
6X9
2W
160
6X12
12X6
12X12
4W
300
OUTLINE OF MECH. RM. IN ATTIC.
9X12
A21
A1
9X9
3W
180
DC-1
15X15
4W
500
THREE Ⓔ OVERHEAD STEAM PIPES.
4"
4"
3"
PCR
2" PCR
2"
PIPE HUNG BESIDE Ⓔ STM. PIPES
A18
A19
A20
A17
A16
NEW DOOR BY GEN'L. CONTR.
5'9" X 7'8" OPENING. INSTALL LOUVERED SECTION WITH FIRE DAMPER SECTION IN BACK. ENTIRE ASSEMBLY CONSTRUCTED TO BE REMOVABLE.
EXISTING BLDG.
Ⓔ BAND ROOM HV UNIT IN LOFT 4
A24
A25
NEW THERMOSTAT.
A22
A23
RELOCATE Ⓔ 38X16 OSA LOUVER DOWN 2 INCHES. RECONNECT TO Ⓔ DUCTWORK SEE ELEVATION 5/8
N
A

HEATING & VENTILATING FLOOR PLAN
SECTOR 'A'

1/8" = 1'0"

1/M-5

REGISTERED PROFESSIONAL ENGINEER
9365
R. F. Marquess
OREGON
NOV. 7, 1952
ROBERT F. MARQUESS

HVAC - SECTOR A
SWEET HOME HIGH SCHOOL
ADDITIONS AND ALTERATIONS 1974
DISTRICT 55 LINN COUNTY, OREGON

ARCHITECTS
HAMLIN, MARTIN,
SCHULTZ & GEYER
AIA
159 W. 12TH EUGENE, OREGON 97401

M
5
JOB NO.

REGISTERED ARCHITECT
CLARE K. HAMLIN
Clare K Hamlin
EUGENE, OREGON
STATE OF OREGON

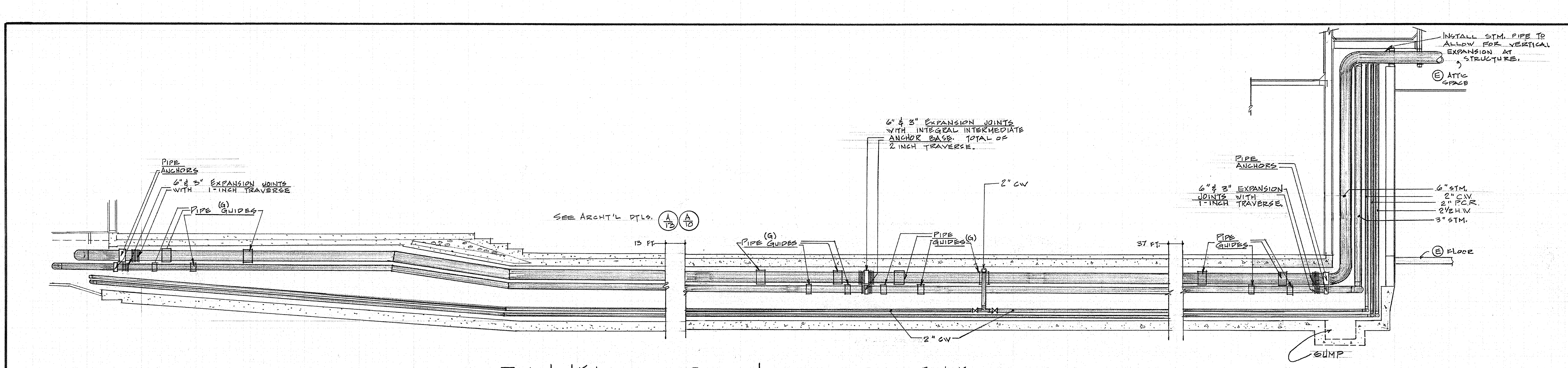
PIPE ANCHORS
6" & 3" EXPANSION JOINTS WITH 1-INCH TRAVERSE
PIPE (G) GUIDES
SEE ARCHT'L DTLS. A/13 A/10
13 FT.
PIPE GUIDES (G)
6" & 3" EXPANSION JOINTS WITH INTEGRAL INTERMEDIATE ANCHOR BASE. TOTAL OF 2 INCH TRAVERSE.
PIPE GUIDES (G)
2" CW
2" CW
37 FT.
PIPE GUIDES
PIPE ANCHORS
6" & 3" EXPANSION JOINTS WITH 1-INCH TRAVERSE.
INSTALL STM. PIPE TO ALLOW FOR VERTICAL EXPANSION AT STRUCTURE.
Ⓔ ATTIC SPACE
6" STM.
2" C.W.
2" P.C.R.
2½ H.W.
3" STM.
Ⓔ FLOOR
SUMP

TUNNEL PIPING PROFILE A/M6

1/4" = 1'0"

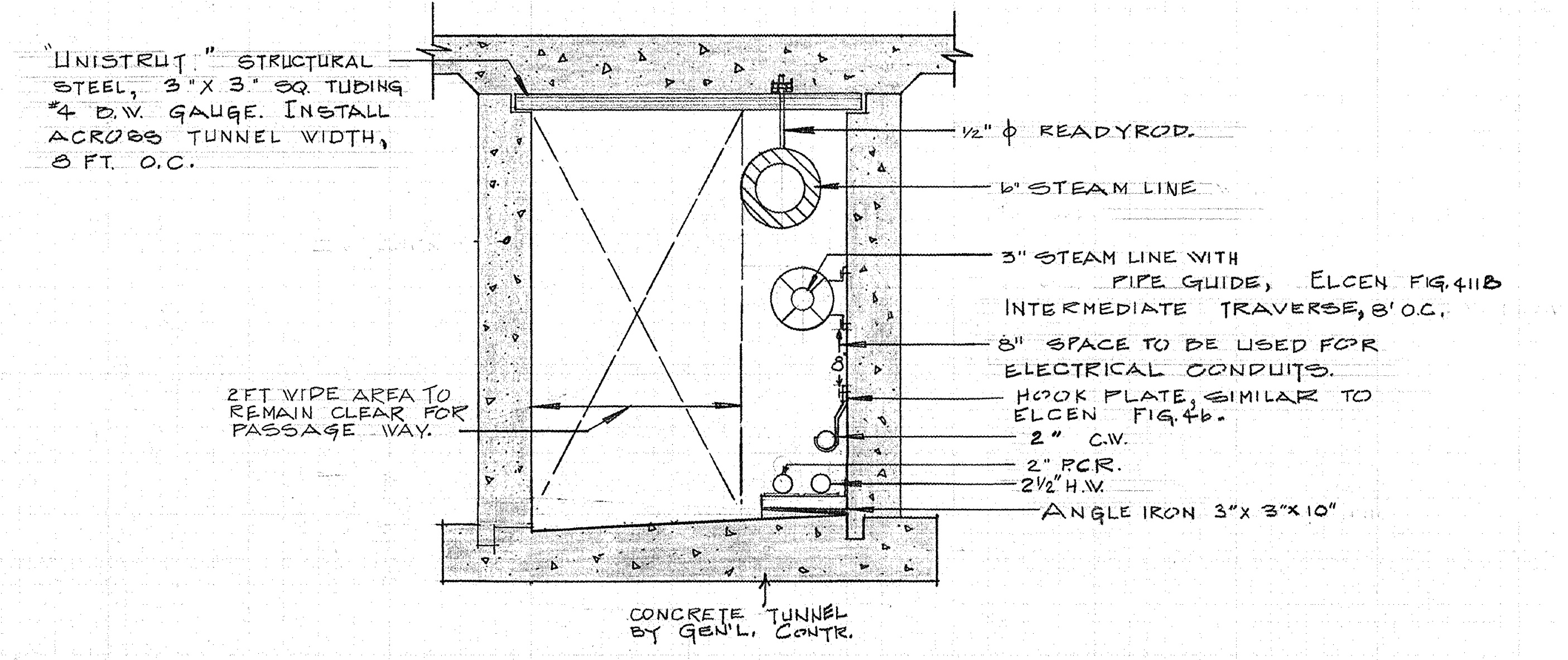
"UNISTRUT" STRUCTURAL STEEL, 3" X 3" SQ. TUBING #4 B.W. GAUGE. INSTALL ACROSS TUNNEL WIDTH, 8 FT. O.C.
½" ϕ READYROD.
6" STEAM LINE
3" STEAM LINE WITH PIPE GUIDE, ELCEN FIG. 411B INTERMEDIATE TRAVERSE, 8' O.C.
8" SPACE TO BE USED FOR ELECTRICAL CONDUITS.
HOOK PLATE, SIMILAR TO ELCEN FIG. 4b.
2" C.W.
2" P.C.R.
2½" H.W.
ANGLE IRON 3" X 3" X 10"
2 FT WIDE AREA TO REMAIN CLEAR FOR PASSAGE WAY.
CONCRETE TUNNEL BY GEN'L. CONTR.

TYPICAL TUNNEL CROSS SECTION B/M-6

SCALE 3/4" = 1'0"

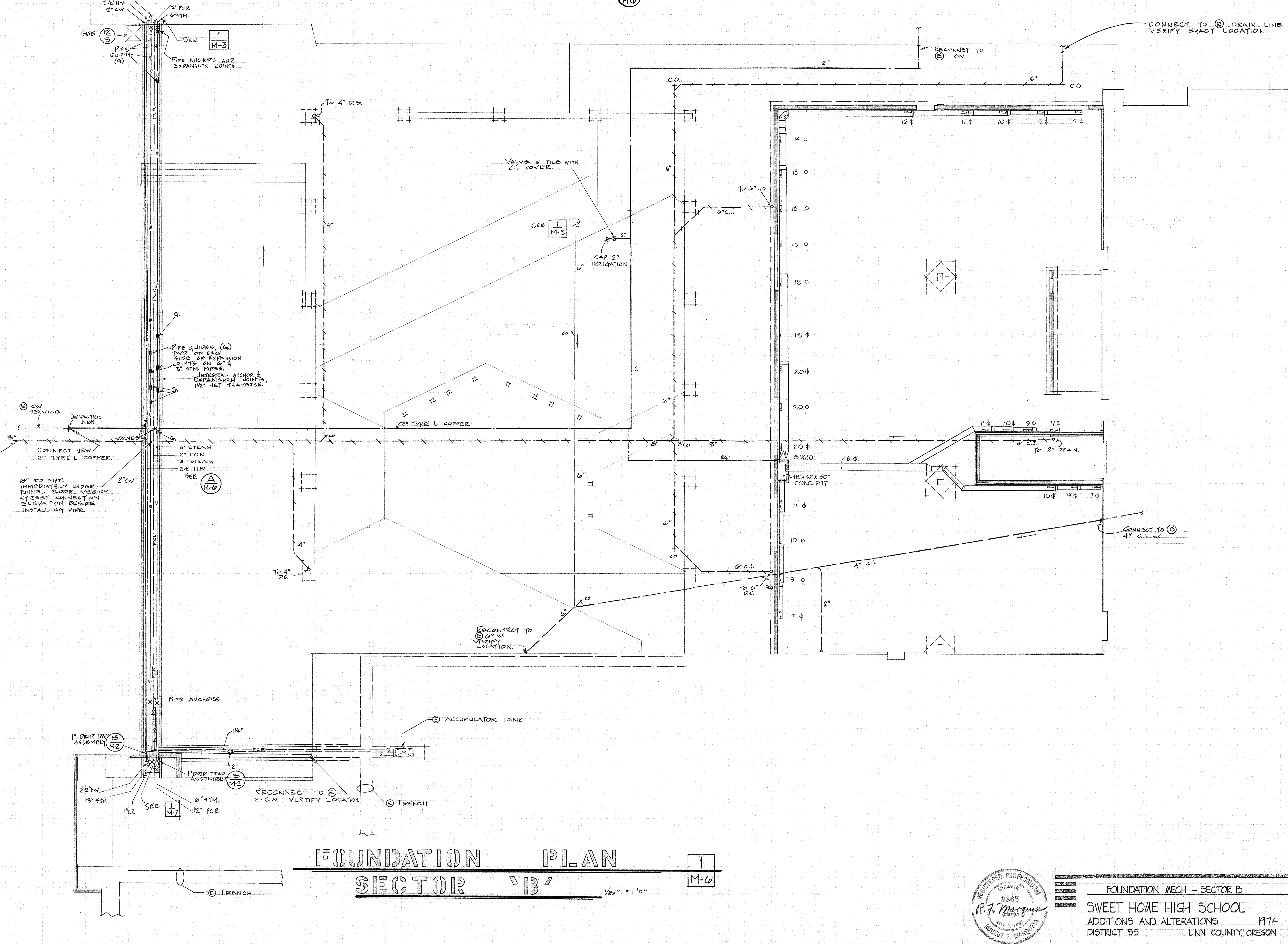
3" STM.
2½" HW
2" CW
2" PCR
6" STM.
SEE 12/3
SEE 1/M-3
PIPE GUIDES (G)
PIPE ANCHORS AND EXPANSION JOINTS
PCR
G.
PIPE GUIDES, (G.) TWO ON EACH SIDE OF EXPANSION JOINTS ON 6" & 3" STM. PIPES.
INTEGRAL ANCHOR & EXPANSION JOINTS, 1½" NET TRAVERSE.
G.
Ⓔ CW SERVICE
DIELECTRIC UNION
VALVES
G.
8"
SEE 1/M-1
CONNECT NEW 2" TYPE L COPPER.
6" STEAM
2" PCR
3" STEAM
2½" HW
SEE A/M-6
2" CW
8" RD PIPE IMMEDIATELY UNDER TUNNEL FLOOR. VERIFY STREET CONNECTION ELEVATION BEFORE INSTALLING PIPE.
TO 4" D.S.
4"
4"
TO 4" D.S.
VALVE IN TILE WITH C.I. COVER.
SEE 1/M-3
2"
CAP 2" IRRIGATION
6"
CO
2"
2" TYPE L COPPER
CO
6"
6"
8"
CO
3"
3/4"
6"
CO
RECONNECT TO Ⓔ 6" W. VERIFY LOCATION.
C.O.
6"
2"
RECONNET TO Ⓔ CW
6"
CO
CONNECT TO Ⓔ DRAIN LINE VERIFY EXACT LOCATION.
TO 6" D.S.
6" C.I.
6" C.I.
TO 6" D.S.
FCO
4" C.I.
2"
12ϕ
11ϕ
10ϕ
9ϕ
7ϕ
14 ϕ
16 ϕ
16 ϕ
16 ϕ
18 ϕ
18 ϕ
20ϕ
20ϕ
20ϕ
18"X20"
16ϕ
18"X42"X30" CONC. PIT
11 ϕ
10 ϕ
9 ϕ
7 ϕ
11ϕ
10ϕ
9ϕ
7ϕ
3" C.I.
TO 2" DRAIN.
10ϕ
9ϕ
7ϕ
CONNECT TO Ⓔ 4" C.I. W.
PIPE ANCHORS
1" DRIP TRAP ASSEMBLY B/M-2
1¼"
CR
PCR
2"
1" DRIP TRAP ASSEMBLY B/M-2
Ⓔ ACCUMULATOR TANK
2½" HW
3" STM.
1" CR
SEE 1/M-7
6" STM.
1½" PCR
RECONNECT TO Ⓔ 2" C.W. VERTIFY LOCATION
Ⓔ TRENCH
Ⓔ TRENCH

FOUNDATION PLAN 1/M-6
SECTOR 'B'

1/8" = 1'0"

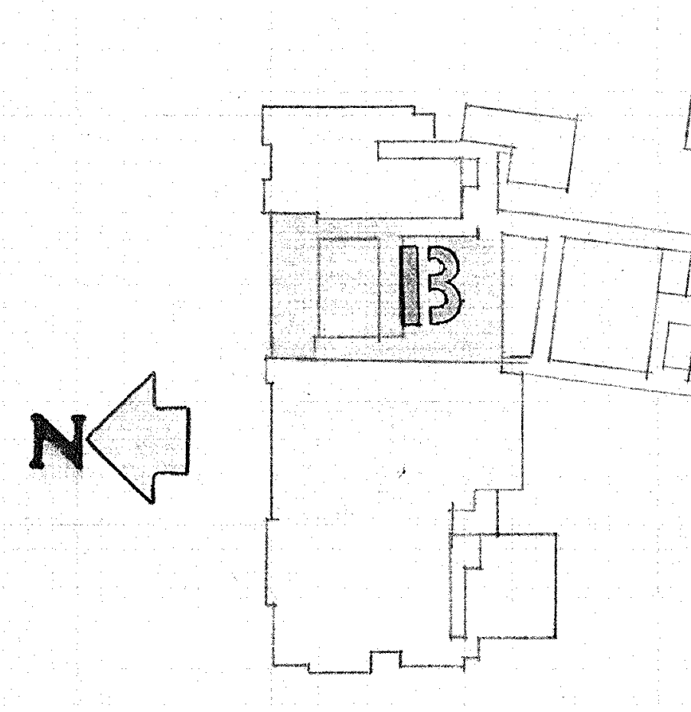

REGISTERED PROFESSIONAL ENGINEER 3365 OREGON NOV. 7, 1952 ROBERT F. MARQUESS

R. F. Marquess

FOUNDATION MECH – SECTOR B

SWEET HOME HIGH SCHOOL
ADDITIONS AND ALTERATIONS 1974
DISTRICT 55 LINN COUNTY, OREGON

ARCHITECTS
HAMLIN, MARTIN,
SCHULTZ & GEYER
AIA
159 W. 12TH EUGENE, OREGON 97401

M
6
JOB NO.

REGISTERED ARCHITECT STATE OF OREGON
CLARE K. HAMLIN
Clare K Hamlin
EUGENE, OREGON

SHADED AREA INDICATES CLEARANCES TO BE OBSERVED FOR LOWER HP UNIT MAINTENANCE, DUCTS PIPING CONNECTIONS, FILTER REMOVAL AND HP UNIT REMOVAL.
UPPER HP UNIT
MAX. WEIGHT-400 LBS.
LOWER HP UNIT
MECH. RM FLOOR
CORK & NEOPRENE ISOLA.
3/4" PLYWOOD DECK
CROSS MEMBER STEEL SUPPORT.
STRUCTURAL STEEL STANDS FOR UPPER H.P. UNITS LOCATED IN 3 MECH. RMS. SEE 2/M-7 2/M17 3/M17
STEEL SUPPORT SYSTEM SIMILAR TO "UNISTRUT".
STEEL PLATE, 6"x6".
NOTE: 12 STANDS REQ'D. ON PROJECT.
2" HS
2" HR
STRUCTURAL STEEL STANDS, BY MECH. CONTR. SEE A/M-7
HP-7
HP-8
B30
B21
B6
FD
12Φ
12x12
14Φ
14x14
FD
HP-1
HP-2
24x12
RA
MD
1¼"
HP-3
HP-4
HP-5
HP-6
HP-7
HP-8
12x13
12x12
1½"
2"
HR
HS
20x20 OSA DUCT WITH OPPOSED BLADE MANUAL DAMPER, & OPERATOR WITH LOCKING QUADRANT UP TO RV-2. B/M-14
A
B/M-7
RAMP
B1
B2
B3
B4
B5
B6
B7
B8
B9
B10
B11
B12
B13
B14
B15
B16
B17
B18
B19
B20
B21
B22
B23
B24
B25
B26
B27
B28
B29
6-4x14 125 EA
4-4x14 125 EA
3-9x15 4W 315 EA.
2-12x15 4W 400 EA.
12x12 300
10x10 200
NITE LOW LIMIT
24x12
14Φ
10Φ
MD
30x10
DRAFT DAMPER
18" BEAM
8x8 100
4-6x12 2W 155 EA
6x12 CORNER 180
6x6 60
10x8 180
17x8
12x10
12x14
24x10
B30 ABOVE
HP-3
HP-4
HP-5
HP-6
HP-7
HP-8
11x6
14x5
12Φ
WH
CONNECT DUCT AT TOP OF CHASE.
42x14
4-4x14 125 EA.
ATTIC MECH. RM. SEE 2/M-7
2" PVC H.P. UNITS DRAIN IN WALL DOWN TO 6" ABOVE GRADE & ELBOW OUT TO 3" C.I. HUB.
3-4x14 125 EA.
14x14 425
12x12 300
FIRE DAMPERS (FD)
Ⓔ UV REMOVED CAP PIPES
Ⓔ HW TO BE REMOVED, CAP PIPES
PIPES IN ATTIC
5x12
8x12
13x12
4x12
5x12
10x6 110
12x10 300
10x12
2-6x9 2W 155
12x12 2W 300
8x8 155
1½" W.
1½" VTR
S-1
10x12 280
3x12
6x9 3W 110
9x12 4W 280
12x10 2W 300
9Φ
7Φ
6Φ
Ⓔ DUCTS TO LOWER HV UNIT
32x16
24x12
18x10
NEW
SA
RA
14x8
SEE 2/M-7
RECONNECT Ⓔ LOWER HV UNIT SA & RA TO Ⓔ DUCTS.
Ⓔ PIPES, IN ATTIC.
1½" CW
1" HW
¾" HWR
NEW UPPER HV UNIT
Ⓔ EXHAUST FAN
Ⓔ LOWER HV UNIT IN ATTIC MECH. RM. 5
Ⓔ UPPER HV UNIT IN ATTIC MECH. RM. 6
Ⓔ PIPES
CONNECT TO Ⓔ 1½" CW.
INSTALL ADJUSTING COCK IN Ⓔ HWR BRANCH PIPE. CONNECT NEW ¾" HWR TO Ⓔ.
Ⓔ EXHAUST FAN
DISCONNECT AND RELOCATE Ⓔ PROPANE TANK TO SECTOR "E" SEE 1/M-16
HS
HR
LOWER HV UNIT
SEE 1/M-11
SEE 1/M-10
Ⓔ UV TO REMAIN
TO Ⓔ CR IN TRENCH
CONNECT TO Ⓔ HW & CW PIPING AT ABANDONED SINK. VERIFY EXACT LOCATION.
Ⓔ UV REMOVED CAP PIPES
CUH-1 B/M-5
CONNECT TO Ⓔ STM IN ATTIC. VERIFY LOCATION.
EXISTING SCIENCE RMS.
CAP
Ⓔ STM.
Ⓔ CONDENSATE RECEIVER
CONNECT TO Ⓔ 2½" STM.
NEW VP SEE A/M-8
PIPING UP FROM TUNNEL SEE 1/M-6
CONVECTOR 32"x32"x6" 10 MBH E/M-2
CUH-1 B/M-5
S
PCR
CAP
3"
CONNECT TO Ⓔ 2½" STM.
REUSE Ⓔ VALVE
1" DRIP ASSEM. B/M-2
6" STM.
1½" PCR
2½" HW
3" STM
CONNECT TO Ⓔ CR.
Ⓔ STM.
PIPES IN ATTIC
CR
SEE 1/M-11
SEE 1/M-10
N
B

TYP. HEAT PUMP STAND MTG. DETAIL A/M-7
½" = 1'0"

SECTION B/M-7
¼" = 1'0"

B30 MECHANICAL ROOM 2/M-7
¼" = 1'-0"

NOTE:
MECH. CONTR. SHALL VISIT SITE TO OBSERVE WORK INVOLVED AND BE RESPONSIBLE FOR CAPPING Ⓔ WATER, GAS, WASTE AND VENT PIPING AT FLOOR, WALL AND CEILING SURFACES AND FOR CAPPING OF Ⓔ EXHAUST FAN INTAKES.

PLUMBING -- HEATING, VENTILATING & A./C. FLOOR PLAN 1/M-7
SECTOR 'B'
⅛" = 1'0"

REGISTERED PROFESSIONAL ENGINEER
3365
R. F. Marquess
NOV. 7, 1982
ROBERT F. MARQUESS

PLMBG & HVAC - SECTOR B
SWEET HOME HIGH SCHOOL
ADDITIONS AND ALTERATIONS 1974
DISTRICT 55 LINN COUNTY, OREGON

ARCHITECTS
HAMLIN, MARTIN, SCHULTZ & GEYER
AIA
159 W. 12TH EUGENE, OREGON 97401

M
7
JOB NO.

REGISTERED ARCHITECT
CLARE K. HAMLIN
Clare K Hamlin
EUGENE, OREGON
STATE OF OREGON

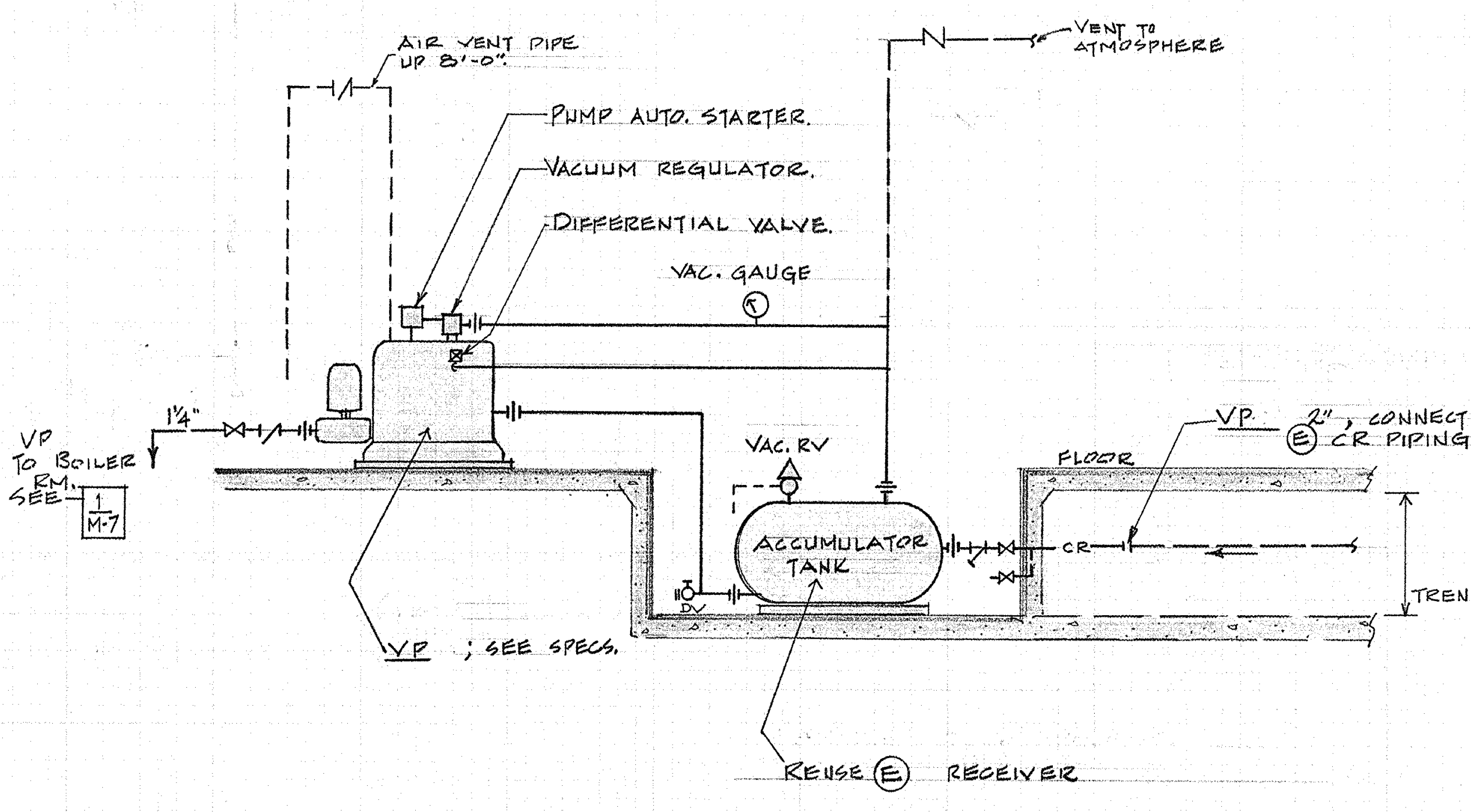
AIR VENT PIPE UP 8'-0".
PUMP AUTO. STARTER.
VACUUM REGULATOR.
DIFFERENTIAL VALVE.
VAC. GAUGE
VENT TO ATMOSPHERE
VP TO BOILER RM. SEE 1/M-7
1¼"
VAC. RV
ACCUMULATOR TANK
DV
VP. Ⓔ 2", CONNECT TO CR PIPING, SEE 1/M-6
FLOOR
CR
TRENCH
VP ; SEE SPECS.
REUSE Ⓔ RECEIVER

VACUUM PUMP INSTALLATION DTL. A/M-8

NO SCALE

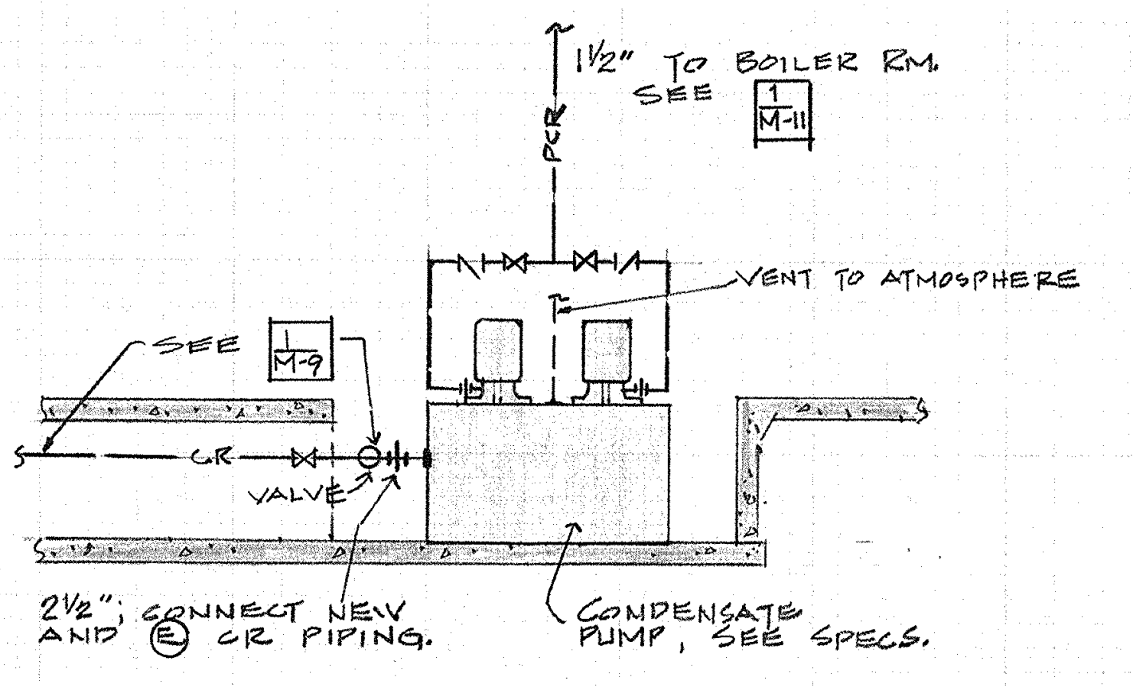
1½" TO BOILER RM. SEE 1/M-11
PCR
VENT TO ATMOSPHERE
SEE 1/M-9
CR
VALVE
2½"; CONNECT NEW AND Ⓔ CR PIPING.
CONDENSATE PUMP, SEE SPECS.

CONDENSATE PUMP INSTALLATION DTL. C/M-8

NO SCALE

GENERAL PROJECT NOTES

1. LOCATE ALL CEILING AIR GRILLES & DIFFUSERS IN CEILING GRIDS AS SHOWN ON ARCHITECTURAL CEILING PLANS. ALIGN AND CENTER GRILLES & DIFFUSERS SYMMETRICALLY ON CEILING PANELS.
2. ALL DUCT DIMENSIONS SHOWN ON DRAWINGS ARE NET INSIDE DUCT LINER DIMENSIONS. DUCT DIMENSIONS SHALL INCREASE 2" EACH WAY.
3. CROSS BRACING BETWEEN STRUCTURAL TRUSS JOISTS IS NOTED AND SHOWN ON ARCHITECTURAL ROOF FRAMING PLANS. VERIFY LOCATIONS AND NOTE ANY DUCT ROUTE AND SIZE CONFLICTS. IF NECESSARY, SHEETMETAL CONTRACTOR MAY SPLIT MAIN DUCT THAT IS TOO LARGE INTO TWO SMALLER DUCTS AS FOLLOWS:
   a. INCREASE EACH SPLIT DUCT TO 60% OF TOTAL AREA OF MAIN DUCT.
   b. REJOIN TWO SMALLER DUCTS IMMEDIATELY AFTER PASSING OBSTRUCTION.
   c. SPLIT-DUCT TRANSITIONS SHALL BE OF AIRFOIL DESIGN.
4. AT SHEETMETAL CONTRACTOR'S OPTION, ROUND DUCT MAY BE USED IN LIEU OF RECTANGULAR DUCT — EXCEPT AT SPLITTER DAMPER BRANCH LINES.
5. IF DUCT DIMENSIONS SHOWN CONFLICT WITH AVAILABLE INSTALLATION SPACE, DUCT DIMENSIONS MAY VARY, BUT MUST EQUAL CROSS SECTIONAL AREA OF SIZES SHOWN.
6. MECH. CONTR. SHALL EXAMINE THE ARCHITECT'S SEQUENCE OF PROJECT BUILDING SCHEDULE BEFORE BIDDING AND DETERMINE CORRESPONDING MECHANICAL WORK. COORDINATE WORK WITH ALL CONTRACTORS THRU EACH PHASE. ALL MATERIAL SHALL BE ORDERED AS SOON AS POSSIBLE TO INSURE DELIVERY AND INSTALLATION OF MATERIAL BEFORE COMPLETION DATE OF EACH CONSTRUCTION PHASE.
7. INSTALL FILTER DRAFT GAGE ACROSS FILTER MEDIA FOR HV UNITS 1, 2, 3, 4, & 5. INSTALL IN BOTTOM OF CHASE FILTER RACK FOR HV-6.

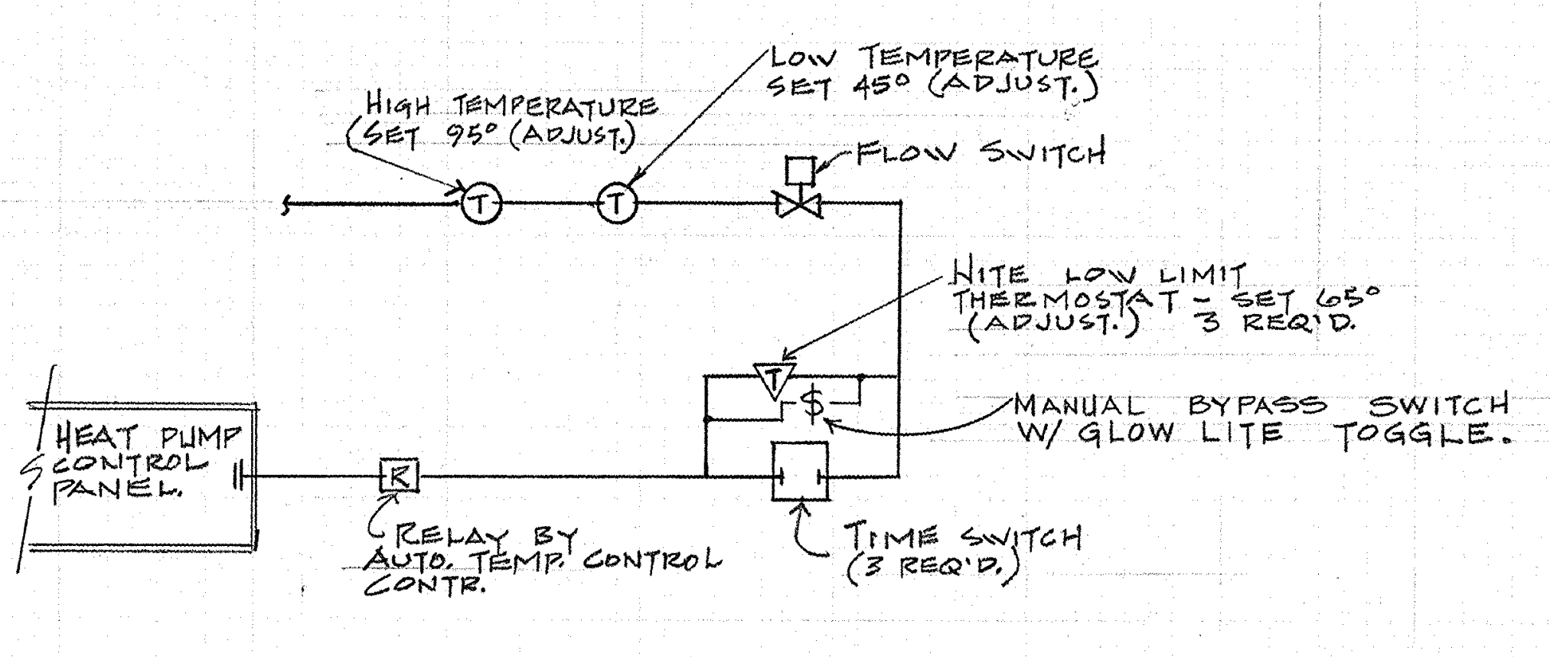
HIGH TEMPERATURE (SET 95° (ADJUST.)
LOW TEMPERATURE SET 45° (ADJUST.)
FLOW SWITCH
T
T
HITE LOW LIMIT THERMOSTAT - SET 65° (ADJUST.) 3 REQ'D.
MANUAL BYPASS SWITCH W/ GLOW LITE TOGGLE.
HEAT PUMP CONTROL PANEL.
R
RELAY BY AUTO. TEMP. CONTROL CONTR.
TIME SWITCH (3 REQ'D.)

DEMAND LIMIT CONTROL SCHEMATIC D/M-8

NO SCALE

GENERAL REFERENCE NOTES

NOTE ALL CONTRACTORS INVOLVED IN WORK LISTED HEREUNDER SHALL VISIT SITE ——— BEFORE BIDDING, TO DETERMINE, VERIFY AND ASSERTAIN THE EXTENT OF EXISTING WORK EACH IS INVOLVED.

REFER. NO.

1. MECHANICAL CONTRACTOR SHALL BREAK INTO 12" PIPE AT POINT OF CONNECTION AND CLEAN OUT SILT FROM THAT POINT TO CATCH BASIN LOCATED AT CURB IN "LONG STREET". FLUSH PIPE UNTIL EXISTING 12" PIPE IS CLEAR.
2. SECTOR A - SHT. M-4 : MECHANICAL CONTRACTOR SHALL INSULATE EXISTING 1500 GAL. HOT WATER STORAGE TANK LOCATED IN BOILER ROOM. SEE SPECIFICATIONS.
3. SECTOR A - SHT. M-5 : MECHANICAL CONTRACTOR SHALL REPLACE 4 FT. SECTION OF DAMAGED INSULATION ON 3" STEAM PIPE. FIBERGLASS JACKET FINISH OVER INSULATION ON 3" PIPE, AND ALSO FIBERGLASS JACKET OVER 2 FT. DAMAGED SECTION ON 4" STEAM PIPE.
4. SECTOR A — SHT. M-5 : MECHANICAL CONTRACTOR SHALL FURNISH AND INSTALL NEW REPLACEABLE MEDIA FILTERS IN EXISTING H&V UNIT. AUTOMATIC TEMPERATURE CONTROL (ATC) CONTRACTOR SHALL CHECK OUT UNIT OPERATION AND REPAIR, OR REPLACE NECESSARY COMPONENTS OF CONTROL SYSTEM TO CORRECT CONTROL SEQUENCES. MIXED AIR CYCLE SHALL ALLOW 55°F MIXED AIR TO ENTER UNIT. REPLACE EXISTING ROOM THERMOSTAT.
5. SECTOR B — SHT. M-7 : MECHANICAL CONTRACTOR SHALL DISCONNECT AND CAP SUPPLY AND RETURN AIR DUCTS ROUTED TO TWO WEST CLASSROOMS SO THAT ALL LOWER H&V UNIT AIR GOES TO TWO EAST CLASSROOMS. A.T.C. CONTRACTOR SHALL REPLACE EXISTING ROOM THERMOSTAT WITH NEW STAT FOR LOWER H&V UNIT. REPAIR AND ADJUST OSA AND RA DAMPERS AND CONTROL SYSTEM TO FUNCTION PROPERLY.
6. SECTOR B — SHT. M-7 : MECHANICAL CONTRACTOR SHALL RECONNECT SUPPLY AND RETURN AIR DUCTS FROM UPPER H&V UNIT TO SUPPLY AND RETURN DUCTS ROUTED TO TWO WEST CLASSROOMS. A.T.C. CONTRACTOR SHALL INSTALL NEW ROOM THERMOSTAT TO CONTROL EXISTING UPPER H&V UNIT STEAM VALVE. REPAIR AUTO. VALVE OPERATOR. ADJUST O.SA AND RA DAMPERS AND REGULATE CONTROL SYSTEM TO FUNCTION PROPERLY.
7. SECTOR C — SHT. M-11 : A.T.C. CONTRACTOR SHALL REPLACE EXISTING MIXING DAMPER CONTROLS TO MAINTAIN 55°F. MIXED AIR ENTERING UNIT. REPLACE EXISTING ROOM THERMOSTAT WITH NEW STAT, WITH GYM GUARD, FOR EXISTING STUDENT AFFAIRS H&V UNIT.
8. SECTOR C — SHT. M-11 : A.T.C. CONTRACTOR SHALL INSTALL 2 POSITION AUTO. VALVES IN EXISTING STEAM PIPING SERVING EXISTING FIN PIPE. INSTALL NEW ROOM THERMOSTATS TO MAINTAIN ROOM TEMPERATURE.
9. SECTOR C — SHT. M-11 : MECHANICAL CONTRACTOR SHALL CUT AND REMOVE EXISTING FIN PIPE CABINET TO ALLOW FOR INSTALLATION OF NEW WALLS. FURNISH AND INSTALL METAL TRIM EDGE AT NEW WALLS.
10. SECTOR C — SHT. M-11 : A.T.C. CONTRACTOR SHALL PROVIDE 30x10 OSA & 24x18 RA MIXING DAMPERS FOR EXISTING GIRLS LOCKER RM. C.U.H. MIXING DAMPERS SHALL MAINTAIN 62°F. AIR ENTERING UNIT. INSTALL NEW 2 POSITION AUTO. STEAM VALVE TO MAINTAIN NEW ROOM STAT SETTING. OSA DAMPER TO CLOSE & STEAM VALVE OPEN ON CONTROL FAILURE OR UNIT IS OFF. PROVIDE ANTI-FREEZE IMMERSION CONTROL IN RETURN COIL PIPE TO STOP FAN AND CLOSE OSA DAMPER AT 45°F WATER; AUTO. RESTART AT 50°F. RISE. SHEETMETAL CONTRACTOR TO INSTALL MIXING DAMPERS. CUT AND FIT NEW 18 GA. SHEETMETAL CUH BOTTOM COVER WITH ACCESS PANEL. MECHANICAL CONTRACTOR SHALL RECONNECT EXISTING PIPING TO CUH. UNIT HUNG FROM ROOF STRUCTURE IN CEILING SPACE WITH FOUR 3/8"∅ STEEL RODS AND SPRING VIBRATION ISOLATORS. CONNECT NEW CEILING DIFFUSER WITH DUCT AND FLEXIBLE CONNECTION TO UNIT. REPLACE EXISTING MOTOR WITH NEW 1/4 H.P., 120 VOLT, 1-PHASE, 1750 RPM MOTOR. NEW BELTS REQ'D.
11. SECTOR C — SHT. M-11 : MECHANICAL CONTRACTOR SHALL PROVIDE AND INSTALL A NEW 10 H.P., 240 VOLT, 3-PHASE MOTOR ON GYM H&V UNIT TO REPLACE EXISTING MOTOR. PROVIDE NEW MOUNTS, BELTS, ADJUSTABLE DRIVES AND STARTER. EXISTING UNIT IS TRANE "CLIMATE CHANGER" TYPE 2-24. AIR BALANCE UNIT TO PROVIDE 12,000 CFM. VERIFY DRIVE SIZE WITH MANUFACTURER. A.T.C. CONTRACTOR SHALL PROVIDE TWO SETS OF 30x12 RA DAMPERS AND 48x48 OSA DAMPERS TO MIX AIR TO 55°F. AIR ENTERING UNIT. PROVIDE TWO AUTO. STEAM VALVES TO OPERATE FROM NEW ROOM STAT, WITH GYM GUARD, TO MAINTAIN ROOM STAT SETTING. OSA DAMPER TO CLOSE AND STEAM VALVE TO OPEN ON CONTROL FAILURE OR UNIT IS OFF. MIXING DAMPERS INSTALLED BY SHEETMETAL CONTRACTOR.
12. SECTOR C — SHT. M-11 : A.T.C. CONTRACTOR SHALL CHECK OUT UNIT OPERATION AND REPAIR OR REPLACE NECESSARY COMPONENTS OF UPPER GYM H&V UNIT CONTROL SYSTEM TO CORRECT CONTROL SEQUENCES. MIXED AIR CYCLE SHALL ALLOW 55°F. MIXED AIR TO ENTER UNIT. INSTALL NEW ROOM THERMOSTAT WITH GYM GUARD.
13. SECTOR C — SHT. M-11 : MECHANICAL CONTRACTOR SHALL RESLOPE CONDENSATE RETURN PIPE FROM EXISTING ADMINISTRATION H&V UNIT TO DRAIN FROM STEAM TRAP TO CONDENSATE MAIN. A.T.C. CONTRACTOR SHALL PROVIDE MIXING DAMPER SECTIONS FOR 24x12 OSA AND 18x16 RA DUCTS, AND CONTROLS TO MAINTAIN 55°F. AIR TO ENTER UNIT. INSTALL NEW ROOM THERMOSTAT TO CONTROL AUTO. STEAM VALVE TO MAINTAIN ROOM TEMPERATURE. OSA DAMPER TO CLOSE AND AUTO. STEAM VALVE TO OPEN ON CONTROL FAILURE OR UNIT IS OFF. MIXING DAMPERS INSTALLED BY SHEETMETAL CONTRACTOR.
14. SECTOR D — SHT. M-13 : MECHANICAL CONTRACTOR SHALL BE RESPONSIBLE FOR DISCONNECTING ONE SET OF FREEZER REFRIGERANT LINES TO EXISTING ROOFTOP AIR COOLED CONDENSER AND FOR MOVING AND RELOCATING THE CONDENSER ON THE ROOF NEAR THE RELOCATED FREEZER. RECONNECT AND RECHARGE THE REFRIGERANT SYSTEM.
15. SECTOR D — SHT. M-14: MECHANICAL CONTRACTOR SHALL FURNISH AND INSTALL TWO NEW DRIVE BELTS AND TO ALIGN MOTOR AND FAN DRIVES ON EXISTING EXHAUST FAN 'B'.
16. SECTOR D SHT. M-14: A.T.C. CONTRACTOR SHALL CHECK OUT EXISTING H&V-'B' AND EXHAUST FAN B UNIT OPERATIONS. REPAIR OR REPLACE NECESSARY CONTROL SYSTEM COMPONENTS TO CORRECT CONTROL SEQUENCES. RELAY TO START EXHAUST FAN-'B' AS RA DAMPER CLOSES AND EXHAUST FAN DAMPER OPENS. PROVIDE 44x22 OSA AND 28x24 RA MIXING DAMPERS AND CONTROLS TO MAINTAIN A MIXED AIR CYCLE ALLOWING 55°F. AIR ENTERING H&V UNIT B. OSA DAMPER SHALL CLOSE AND AUTO. STEAM VALVE TO OPEN ON CONTROL FAILURE OR UNIT IS OFF. INSTALL NEW ROOM THERMOSTAT WITH GYM GUARD. SHEETMETAL CONTRACTOR SHALL INSTALL MIXING DAMPERS.
17. SECTOR D — SHT. M-14: MECHANICAL CONTRACTOR SHALL REMOVE EXISTING UNIT PIPING & STEAM COIL IN H&V UNIT-'A'. INSTALL RETURN AIR DUCT SYSTEM AND CONNECT AT UNIT INTAKE DUCT. A.T.C. CONTRACTOR SHALL PROVIDE 34x14 OSA AND RA MIXING DAMPERS AND CONTROLS TO ALLOW 55°F. AIR TO ENTER UNIT. DISCHARGE DUCT STAT SHALL CLOSE OSA DAMPER IF AIR BELOW 45° F. OR ON CONTROL FAILURE, & THREE DUCT COIL AUTO. VALVES TO REMAIN OPEN. SHEETMETAL CONTRACTOR SHALL INSTALL MIXING DAMPERS.
18. SECTOR D — SHT. M-14: A.T.C. CONTRACTOR SHALL REPLACE EXISTING H&V-'A' BOOSTER DUCT COIL (BC-1 & BC-2) ROOM THERMOSTATS, AND OPERATE COIL AUTO. VALVES FOR CORRECT CONTROL SEQUENCE TO MAINTAIN ROOM STAT SETTING.
19. SECTOR A — SHT. M-4: MECH. CONTR. SHALL INSTALL NEW HWR PUMP IN Ⓔ PIPE AT HW STORAGE TANK. PROVE FLOW IN NEW & Ⓔ HWR PIPING SYSTEM AND ADJUST ALL AUJUSTING COCKS.
20. SECTOR D — SHT. M-14: THE MECH. CONTR. SHALL DISCONNECT Ⓔ POOL CONVERTER PIPING AND REMOVE TUBE BUNDLE. SCOUR TUBES AND REMOVE SCALE. INSPECT TUBES AND REPLACE ANY DAMAGED TUBES. CLEAN SHELL INTERIOR. RE INSTALL BUNDLE AND RECONNECT PIPING.

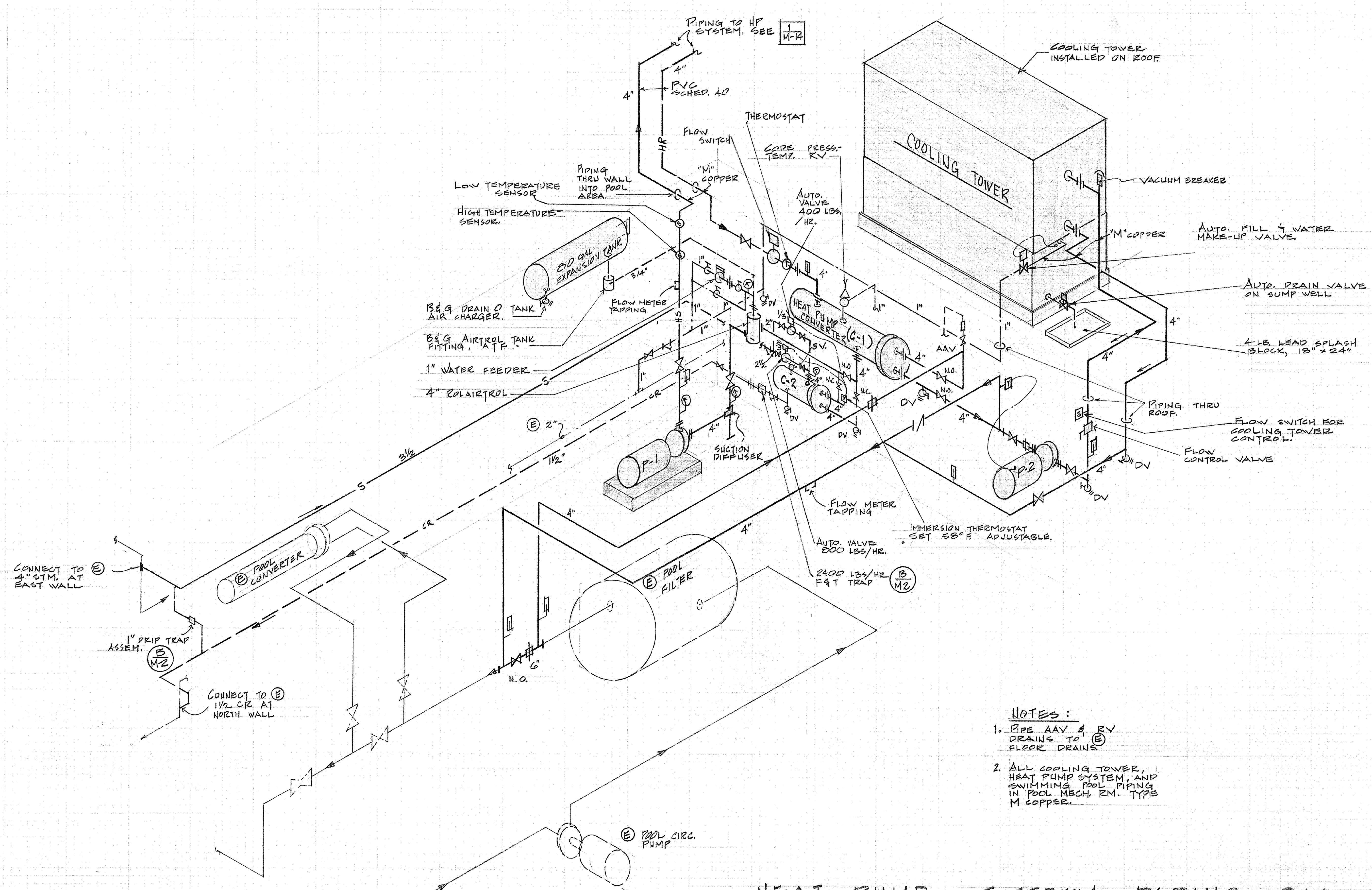
PIPING TO HP SYSTEM, SEE 1/M-14
4"
PVC SCHED. 40
HR
"M" COPPER
THERMOSTAT
FLOW SWITCH
CODE TEMP. PRESS.- RV
COOLING TOWER INSTALLED ON ROOF
COOLING TOWER
VACUUM BREAKER
LOW TEMPERATURE SENSOR
HIGH TEMPERATURE SENSOR.
PIPING THRU WALL INTO POOL AREA.
AUTO. VALVE 400 LBS./HR.
80 GAL EXPANSION TANK
3/4"
B&G DRAIN & TANK AIR CHARGER.
FLOW METER TAPPING
B&G AIRTROL TANK FITTING, ATF
1" WATER FEEDER
4" ROLAIRTROL
HEAT PUMP CONVERTER (C-1)
C-2
S.V.
AAV
N.O.
N.C.
DV
"M" COPPER
AUTO. FILL & WATER MAKE-UP VALVE.
AUTO. DRAIN VALVE ON SUMP WELL
4 LB. LEAD SPLASH BLOCK, 18" x 24"
PIPING THRU ROOF.
FLOW SWITCH FOR COOLING TOWER CONTROL.
FLOW CONTROL VALVE
P-1
P-2
SUCTION DIFFUSER
FLOW METER TAPPING
IMMERSION THERMOSTAT SET 58°F ADJUSTABLE.
AUTO. VALVE 800 LBS/HR.
2400 LBS/HR F&T TRAP B/M2
Ⓔ 2"
3½
1½"
S
CR
CONNECT TO Ⓔ 4" STM. AT EAST WALL
Ⓔ POOL CONVERTER
1" DRIP TRAP ASSEM. B/M-2
CONNECT TO Ⓔ 1½ CR AT NORTH WALL
Ⓔ POOL FILTER
6"
N.O.
Ⓔ POOL CIRC. PUMP

NOTES :
1. PIPE AAV & RV DRAINS TO Ⓔ FLOOR DRAINS.
2. ALL COOLING TOWER, HEAT PUMP SYSTEM, AND SWIMMING POOL PIPING IN POOL MECH. RM. TYPE M COPPER.

HEAT PUMP SYSTEM PIPING DIAG. B/M-8

REGISTERED PROFESSIONAL ENGINEER 3365 OREGON
R. F. Marquess
NOV. 7, 1952
ROBERT F. MARQUESS

HP DIAGRAM, NOTES & DTLS.
SWEET HOME HIGH SCHOOL
ADDITIONS AND ALTERATIONS 1974
DISTRICT 55 LINN COUNTY, OREGON

ARCHITECTS
HAMLIN, MARTIN, SCHULTZ & GEYER
AIA
159 W. 12TH EUGENE, OREGON 97401

M
8
JOB NO.

REGISTERED ARCHITECT STATE OF OREGON
CLARE K. HAMLIN
Clare K Hamlin
EUGENE, OREGON

24"×20" DUCT WITH TURNVANES ENCASED IN CONC. BY MECH. CONTR.
DUCT BOOTS UP BEHIND LOCKERS, TYP. WHERE SHOWN ON 1/M-11
SEE ARCHT'L. DTL. 2/14
UP TO 6" D.S.
F.C.O.
1½"S 1"CR
S=¼"/FT.
24×20 DUCT WITH TURNVANES ENCASED IN CONC. BY MECH. CONTR.
1½"S & 1"CR UP
2"S 1½"CR
PIPING IN 8" TRANSITE TILE.
BOOTS ARRANGED TO AVOID WIRE MESH PARTION STDS (STDS ARE 5'-0" O.C. STARTING FROM HEAD WALL @ NORTH.
DUCT BOOTS UP BETWEEN LOCKERS, TYP. WHERE SHOWN, SHT. 1/M-11
SEE ARCHT'L DTL. 1/14
24"x 20" DUCT WITH TURNVANES ENCASED IN CONC. BY MECH. CONTR.
2½"S 1½"CR
CONNECT TO Ⓔ 2"CR IN TRENCH. ROUTE TO ACCUMULATOR TANK.
CONNECT TO Ⓔ 4" STEAM FROM PIPE RISER IN CHASE, & CAP Ⓔ PIPE BRANCH LINES.
Ⓔ TRENCHES
38×10×32 UP.
1" DRIP TRAP ASSEMBLY B/M-2
CONDENSATE PUMP. SEE C/M-8
MECH. CONTR. SHALL CUT Ⓔ CONC. FLOOR WITH CONC. SAW. INSTALL 2" W. TO Ⓔ 4" W. AND CONNECT. REFINISH FLOOR TO MATCH Ⓔ.
1¼"CW
3/4"HWR
1"HW
SEE 1/M-12
3'6"×3'0" PIPE TUNNEL BY GEN'L. CONTR.
FLOOR ACCESS PLATE BY GEN'L. CONTR.
SEE 1/M-10
2½"S
1¼"CR
6" C.I.
N
C

FOUNDATION PLAN
SECTOR 'C'

1/M-9

1/8" = 1'0"

REGISTERED PROFESSIONAL ENGINEER 3365 OREGON NOV. 7, 1952 ROBERT F. MARQUESS
R. F. Marquess

FOUNDATION MECH - SECTOR C

SWEET HOME HIGH SCHOOL
ADDITIONS AND ALTERATIONS 1974
DISTRICT 55 LINN COUNTY, OREGON

ARCHITECTS
HAMLIN, MARTIN,
SCHULTZ & GEYER
AIA
159 W. 12TH EUGENE, OREGON 97401

M
9
JOB NO.

REGISTERED ARCHITECT STATE OF OREGON
CLARE K. HAMLIN
Clare K Hamlin
EUGENE, OREGON

SEE 1/M-7
2½"
C1
C2
C3
C4
C5
C6
C7
C8
C9
C10
C11
C12
C13
C14
C15
C16
C17
C18
C19
C20
C21
C22
C23
C24
C25
C26
C27
C28
C29
C30
C31
C32
C33
C34
C35
C36
C37
C38
C39
C40
C41
C42
C43
C44
C45
C46
C47
C48
C49
C50
C51
C52
C53
C54
C55
C56
C57
C58
C59
C60
C61
C62
C63
C64
C65
C66
C67
C68
C69
C70
C71
C72
C73
C74
C76
C77
C78
C79
C80
C81
C82
C83
C84
C85
C87
C89
C91
C92
C93
C94
C95
3/4"
2"
SEE 1/M-13
3/4
1½"
SEE 1/M-16
SS
DF-1
4" V.T.R.
+WCO
1¼" C.W. HDR
W.C. -2
U
L
H.B.
4" CHASE
½"
1¼"
1½" V.T.R.
S.D.-1
SOAP SPRAY
SH-1
2" V.T.R. WITH FLOOR TO CLG. STAINLESS SLEEVE.
SD 1
1"
D.F.-1
FD-1
H.B
SD-1
1¼" DOWN
2" V.T.R. WITH FLOOR TO CEILING STAINLESS SLEEVE.
WC-2
1¼" HEADER
F.D.-1
SH-2
S.D-2
WC-1
1¼" VTR
Mixing valve V-1
C M-12
42"x18"
SF-1, UP 42"
FD-4
2" V.T.R.
Ⓔ RELOCATED WHIRLPOOL
W.C.-1
S-1
SH-1
SOAP SPRAY
1½" V.T.R.
S.D.-1
½
D.F.-1
HB
WC-3
1½" V
WH
SEE 1/M-9
NEW WHIRLPOOL FURNISHED BY OWNER. VERIFY ROUGH-IN.
CAP Ⓔ 3/4" HW RISER
1½" VTR
F.D 1
DE-1
1¼" VTR
MECH. RM. C41 ABOVE
CHECK & GATE VALVES
6" INSULATED D.S.
F.D-1
N
C

PIPES IN ARCADE SOFFIT, SEE ARCHT'L. DTLS 3/25 & 5/25

CORE DRILL Ⓔ CONC. ATTIC WALL.

MOUNT WC HEIGHT AT 19", (1) ONLY.

1¼" T. & 3/4" DOWN TO SHOWER PANEL

LIQUID SOAP DISPENSING SYSTEM #1

CONNECT TO FILL PIPE WITH ½" CW THRU GATE VALVE, CHECK VALVE & UNION

3/4" DOWN TO SHOWER PANEL.

CONNECT TO Ⓔ HW. VERIFY LOCATION.

PIPES IN ATTIC

PIPES IN CEILING SPACE

CONNECT TO Ⓔ 3/4" HW IN CEILING SPACE

CONNECT TO Ⓔ 2" CW VERIFY EXACT LOCATION

ACCESS, BY GEN'L. CONTR.

REPLACE Ⓔ MIXING VALVE V-2.

MECH. CONTR. SHALL CONNECT ½" CW TO Ⓔ 3/4 CW IN CEILING SPACE.

REPLACE Ⓔ SOAP DISP. HEADS WITH PRESSURE SOAP SPRAY HEADS.

ABANDON Ⓔ GRAVITY SOAP DISPENSOR IN MECH. RM. LOFT. RECONNECT NEW PRESSURE SYSTEM. FLUSH AND CLEAN Ⓔ DISPENSING PIPES TO HEADS BEFORE INSTALLING NEW HEADS.

CONNECT TO Ⓔ 3/4" CW IN STOR'G. RM CEILING SPACE. VERIFY LOCATION.

LIQUID SOAP DISPENSING SYSTEM #2. IN MECH. RM. OVER SHOWER RM.

PLUMBING FLOOR PLAN
SECTOR 'C'

1/8" = 1'0"

1
M-10

REGISTERED PROFESSIONAL ENGINEER
3365
R. F. Marquess
OREGON
NOV. 7, 1952
ROBERT F. MARQUESS

PLMBG - SECTOR C
SWEET HOME HIGH SCHOOL
ADDITIONS AND ALTERATIONS 1974
DISTRICT 55 LINN COUNTY, OREGON

ARCHITECTS
HAMLIN, MARTIN,
SCHULTZ & GEYER
AIA
159 W. 12TH EUGENE, OREGON 97401

M
10
JOB NO.

REGISTERED ARCHITECT
CLARE K. HAMLIN
Clare K Hamlin
EUGENE, OREGON
STATE OF OREGON

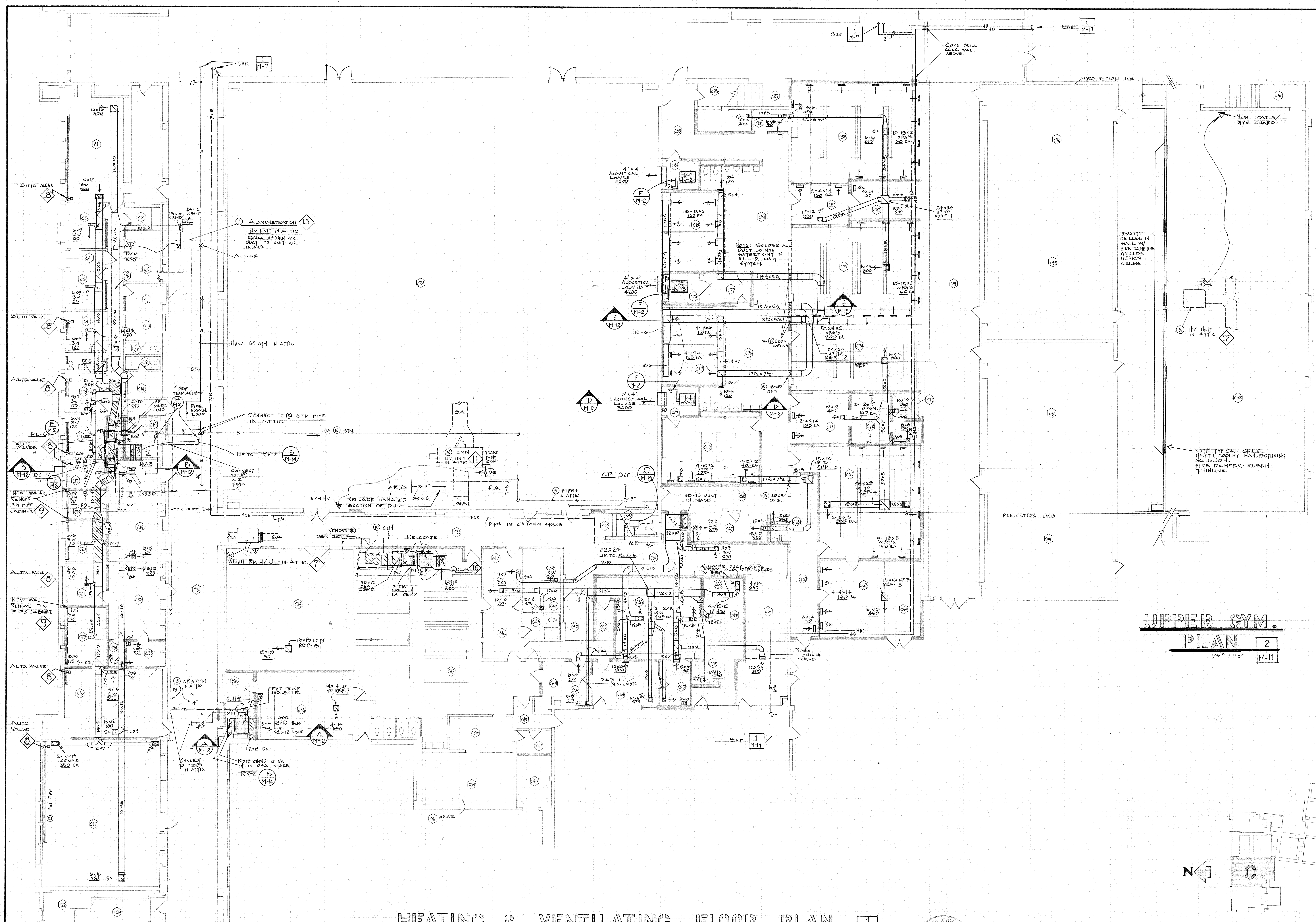
SEE 1 M-7
SEE 1 M-17
CORE DRILL CONC. WALL ABOVE.
PROJECTION LINE
NEW STAT W/ GYM GUARD.
AUTO. VALVE
Ⓔ ADMINISTRATION 13
HV UNIT IN ATTIC
INSTALL RETURN AIR DUCT TO UNIT AIR INTAKE.
ANCHOR
NEW 6" STM. IN ATTIC
4'×4' ACOUSTICAL LOUVRE 4200
4'×4' ACOUSTICAL LOUVRE 4200
3'×4' ACOUSTICAL LOUVRE 3800
NOTE: SOLDER ALL DUCT JOINTS WATERTIGHT IN REF-2 DUCT SYSTEM.
24×24 UP TO REF-1
24×24 UP TO REF-2
5-36×24 GRILLES IN WALL W/ FIRE DAMPERS. GRILLES 12" FROM CEILING.
Ⓔ HV UNIT IN ATTIC 12
NOTE: TYPICAL GRILLE HART & COOLEY MANUFACTURING NO. 650H. FIRE DAMPER - RUSKIN THINLINE.
CONNECT TO Ⓔ STM PIPE IN ATTIC
UP TO RV-2 B M-14
CONNECT TO Ⓔ CR PIPE
1" DRIP TRAP ASSEM.
PIPE EXPAN. LOOP
5" Ⓔ STM.
Ⓔ GYM HV UNIT IN ATTIC 11
TRANE TYPE
GYM HV
REPLACE DAMAGED SECTION OF DUCT
Ⓔ PIPES IN ATTIC
CP, SEE C M-8
38×10 DUCT IN CHASE.
18×18 UP TO REF-3
28×28 UP TO REF-4
16×16 UP TO REF-5
22×24 UP TO REF-6
SOLDER DUCT JOINTS FROM CLG. DIFFUSERS TO REF.
DUCTS IN CLG. JOISTS
PIPES IN CEILG. SPACE
PIPE IN CEILING SPACE
ATTIC FIRE WALL
NEW WALLS. REMOVE FIN PIPE CABINET 9
NEW WALL. REMOVE FIN. PIPE CABINET. 9
REMOVE Ⓔ OSA DUCT
Ⓔ CUH
RELOCATE
Ⓔ CUH 10
WEIGHT RM. HV UNIT IN ATTIC 7
30×12 OSA OBMD
24×18 GRILLE & RA OBMD
18×10 UP TO REF-8
Ⓔ CR & STM IN ATTIC
CUH-2
F&T TRAP 150 LB/HR.
14×14 UP TO REF-7
12×12 ON.
12×12 OBMD IN RA & IN OSA INTAKE
RV-2 B M-14
CONNECT TO PIPES IN ATTIC.
SEE 1 M-14
C41 ABOVE
FIN PIPE
UPPER GYM. PLAN 2 M-11
1/8" = 1'-0"
N
C

HEATING & VENTILATING FLOOR PLAN 1 M-11

SECTOR 'C'

1/8" = 1'-0"

REGISTERED PROFESSIONAL ENGINEER 3365 OREGON NOV. 7, 1952 ROBERT F. MARQUESS
R. F. Marquess

HVAC - SECTOR C

SWEET HOME HIGH SCHOOL
ADDITIONS AND ALTERATIONS 1974
DISTRICT 55 LINN COUNTY, OREGON

ARCHITECTS
HAMLIN, MARTIN, SCHULTZ & GEYER
AIA
159 W. 12TH EUGENE, OREGON 97401

M
11
JOB NO.

REGISTERED ARCHITECT
CLARE K. HAMLIN
Clare K Hamlin
EUGENE, OREGON
STATE OF OREGON

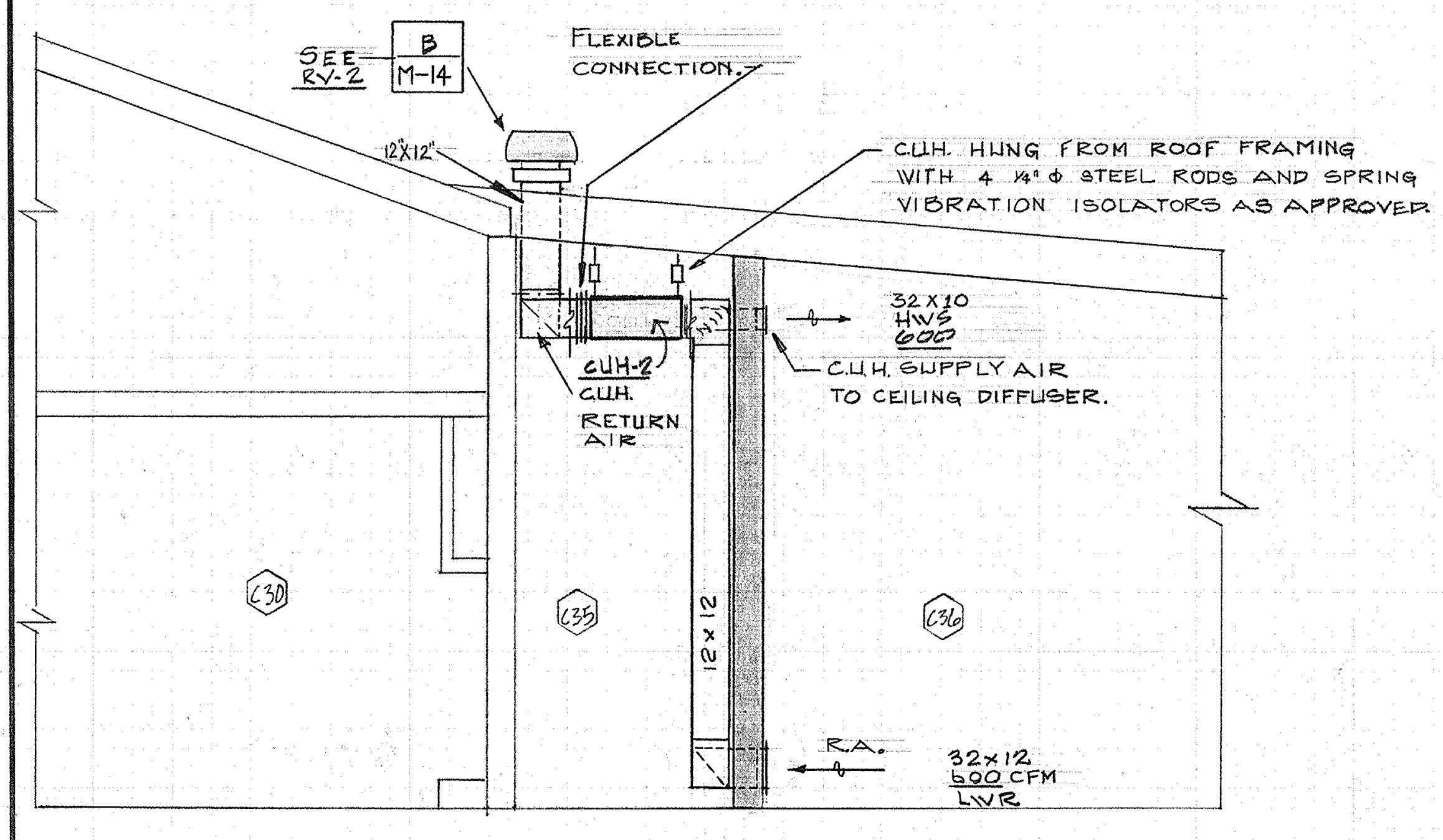
SEE RV-2
B M-14
FLEXIBLE CONNECTION.
12"X12"
C.U.H. HUNG FROM ROOF FRAMING WITH 4 ¼" Φ STEEL RODS AND SPRING VIBRATION ISOLATORS AS APPROVED.
32X10 HWS 600
CUH-2
C.U.H. RETURN AIR
C.U.H. SUPPLY AIR TO CEILING DIFFUSER.
C30
C35
C36
12 x 12
R.A.
32x12 600 CFM LWR

SECTION (A / M-12)
¼" = 1'0"

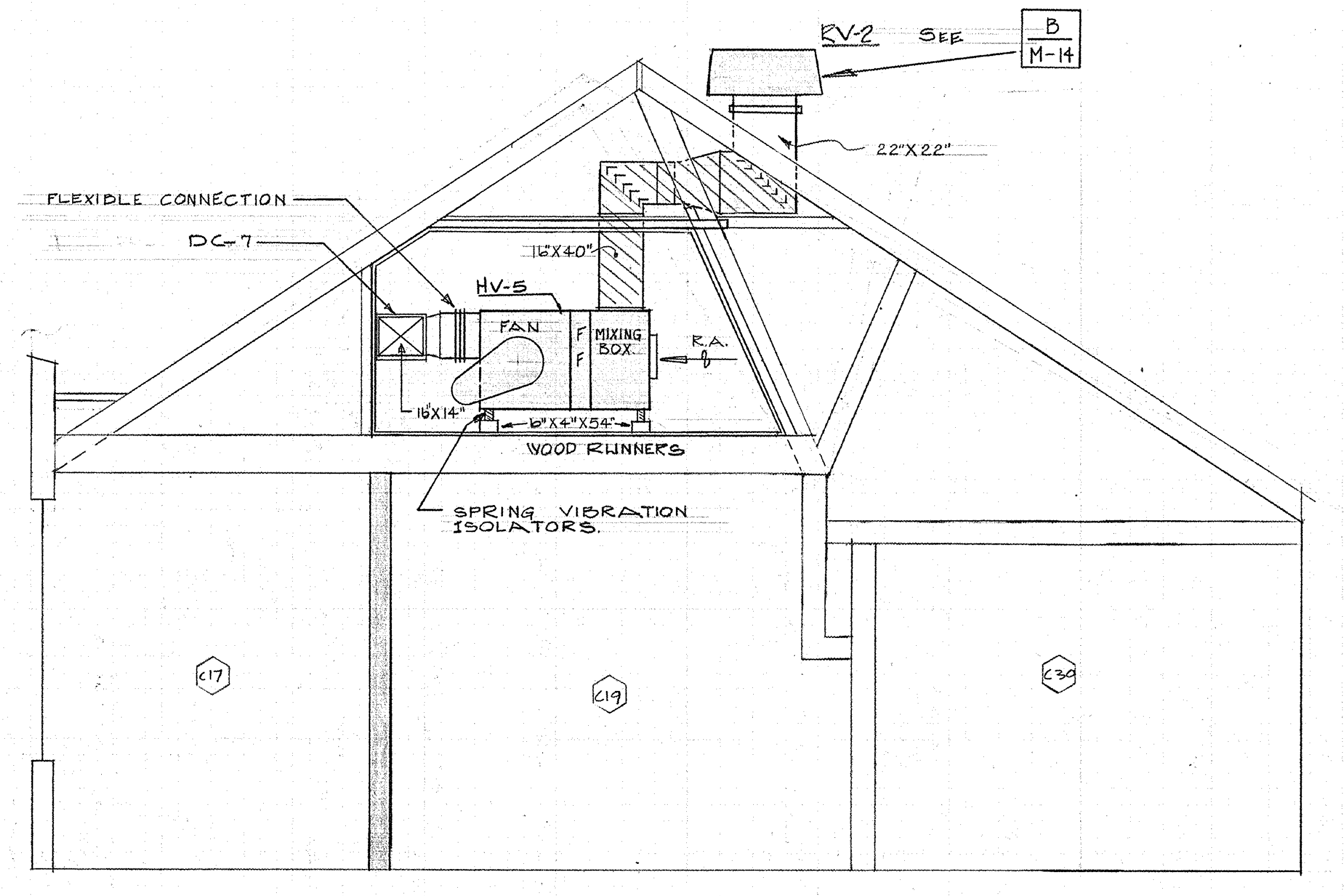
RV-2 SEE B / M-14
22"X22"
FLEXIBLE CONNECTION
DC-7
16"X40"
HV-5
FAN
F F
MIXING BOX
R.A.
16"X14"
6"X4"X54"
WOOD RUNNERS
SPRING VIBRATION ISOLATORS.
C17
C19
C30

SECTION (B / M-12)
¼" = 1'0"

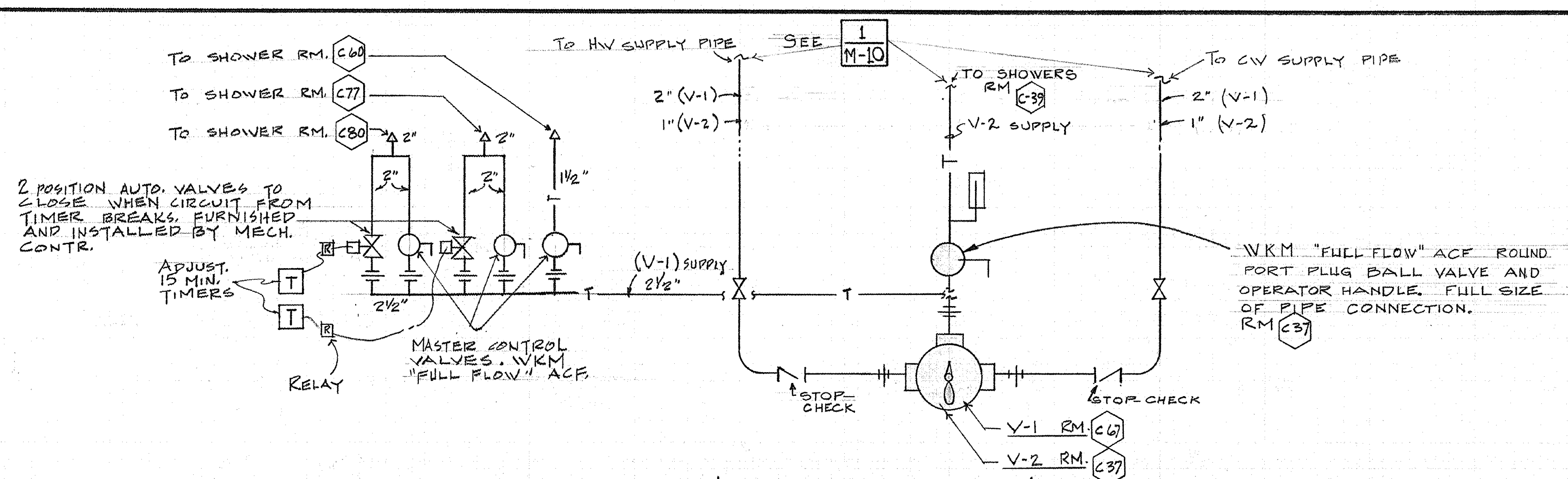
TO SHOWER RM. C60
TO SHOWER RM. C77
TO SHOWER RM. C80
2"
2"
2"
2"
1½"
2 POSITION AUTO. VALVES TO CLOSE WHEN CIRCUIT FROM TIMER BREAKS. FURNISHED AND INSTALLED BY MECH. CONTR.
ADJUST. 15 MIN. TIMERS
T
T
R
R
2½"
RELAY
MASTER CONTROL VALVES. WKM "FULL FLOW" ACF.
(V-1) SUPPLY 2½"
TO HW SUPPLY PIPE
SEE 1 / M-10
2" (V-1)
1" (V-2)
TO SHOWERS RM C-39
V-2 SUPPLY
TO CW SUPPLY PIPE
2" (V-1)
1" (V-2)
WKM "FULL FLOW" ACF ROUND PORT PLUG BALL VALVE AND OPERATOR HANDLE. FULL SIZE OF PIPE CONNECTION. RM C37
STOP-CHECK
STOP-CHECK
V-1 RM. C61
V-2 RM. C37

SHOWER MIXING VALVE DTL. (C / M-12)
NOT TO SCALE

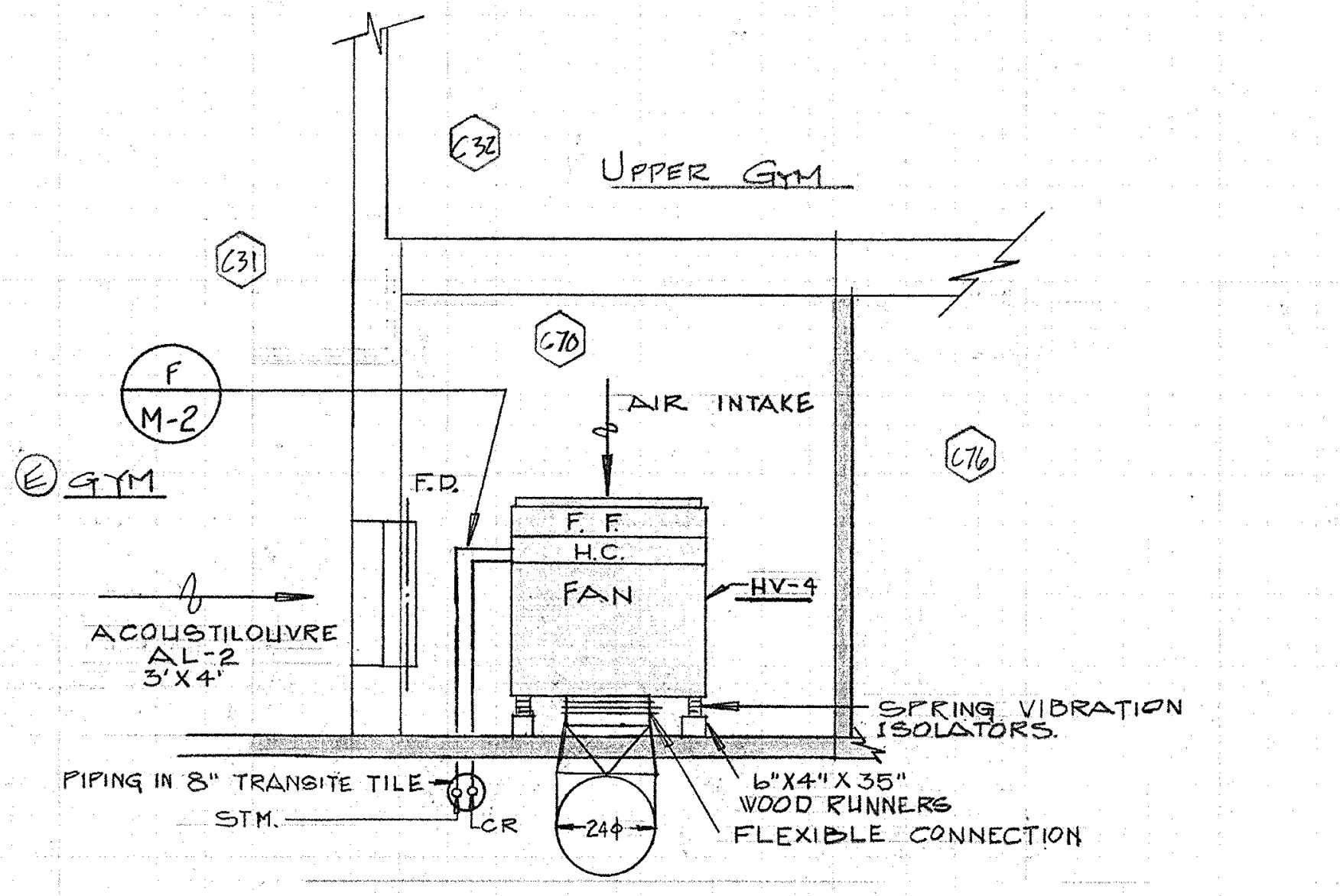
C32
UPPER GYM
C31
C70
F / M-2
Ⓔ GYM
AIR INTAKE
F.D.
F. F.
H.C.
FAN
HV-4
C76
ACOUSTILOUVRE AL-2 3'X4'
SPRING VIBRATION ISOLATORS.
PIPING IN 8" TRANSITE TILE
STM.
CR
24Φ
6"X4"X35" WOOD RUNNERS
FLEXIBLE CONNECTION

SECTION (D / M-12)
¼" = 1'0"

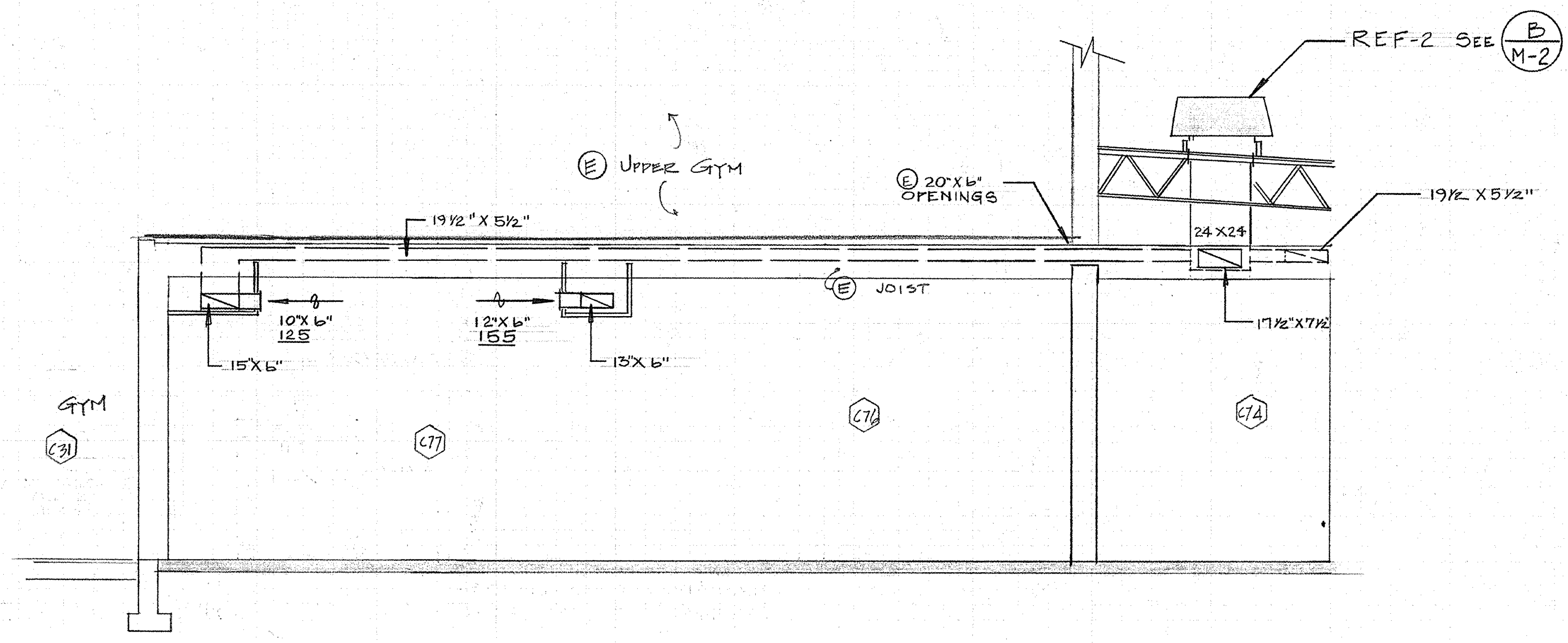
REF-2 SEE B / M-2
Ⓔ UPPER GYM
Ⓔ 20"X6" OPENINGS
19½"X5½"
19½"X5½"
24X24
Ⓔ JOIST
17½"X7½"
10"X6" 125
12"X6" 155
15"X6"
13"X6"
GYM
C31
C77
C76
C74

SECTION (E / M-12)
¼" = 1'0"

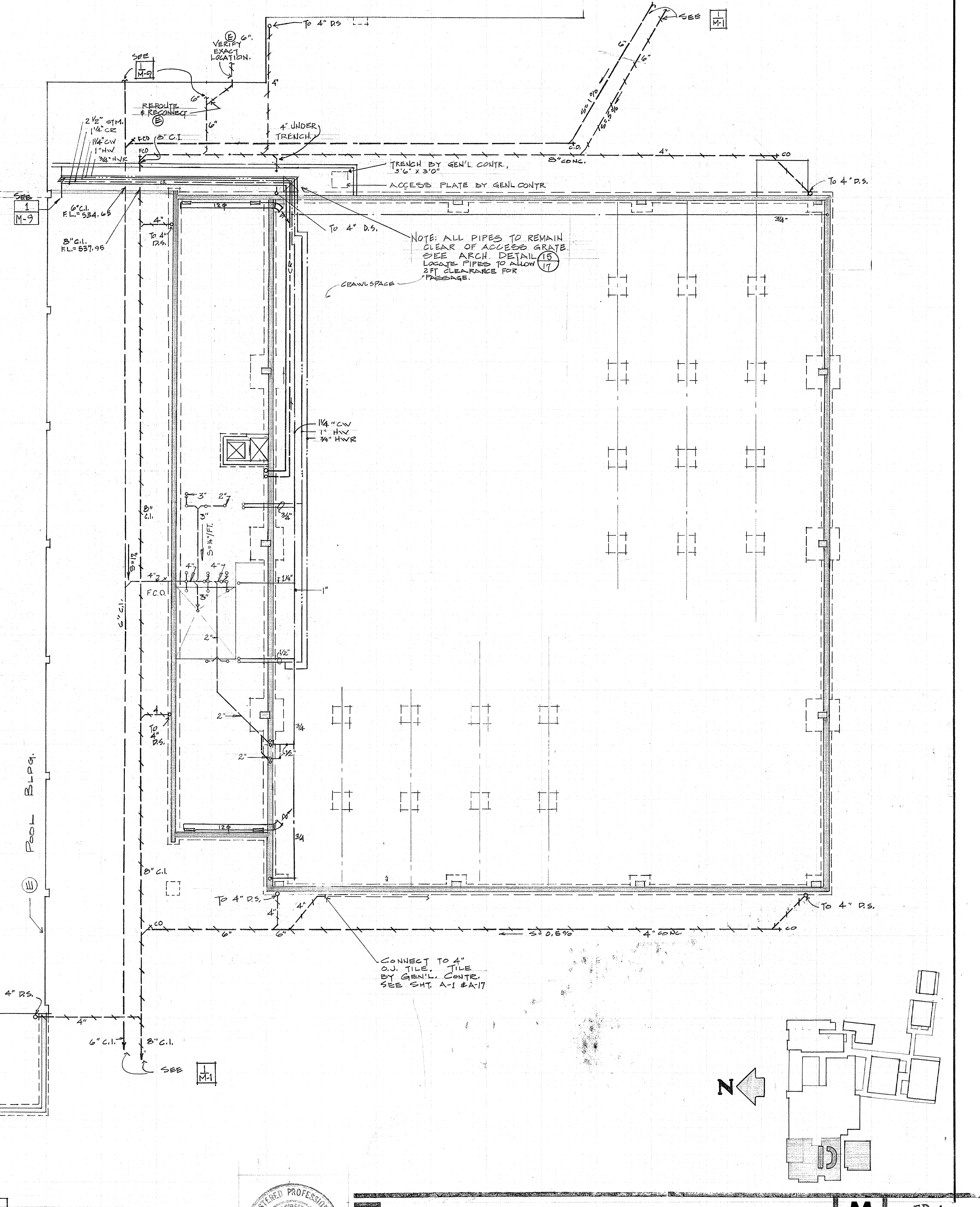
TO 4" D.S
Ⓔ 6". VERIFY EXACT LOCATION.
SEE 1 / M-9
SEE 1 / M-1
6"
6"
S=1%
S=.5%
REROUTE & RECONNECT Ⓔ
6"
4"
2½" STM.
1¼" CR
1¼" CW
1" HW
¾" HWR
FCO
FCO
8" C.I.
4" UNDER TRENCH.
C.O.
8" CONC.
4"
TRENCH BY GEN'L CONTR., 3'6" X 3'0"
ACCESS PLATE BY GEN'L CONTR
SEE 1 / M-9
6" C.I. F.L.=534.65
8" C.I. F.L.=537.95
4"
TO 4" D.S.
TO 4" D.S.
NOTE: ALL PIPES TO REMAIN CLEAR OF ACCESS GRATE. SEE ARCH. DETAIL 15/17. LOCATE PIPES TO ALLOW 2FT CLEARANCE FOR PASSAGE.
CRAWLSPACE
12Φ
¾"
1¼" CW
1" HW
¾" HWR
8" C.I.
3"
2"
3"
S=¼"/FT.
¾"
S=1%
4"
4"
4"
F.C.O.
3"
1¼"
1"
6" C.I.
2"
½"
4
TO 4" D.S.
2"
¾
2"
½"
12Φ
¾
8" C.I.
POOL BLDG. Ⓔ
TO 4" D.S.
4"
4"
4"
CO
6"
6"
S=0.5%
4" CONC.
CO
TO 4" D.S.
CONNECT TO 4" O.J. TILE. TILE BY GEN'L. CONTR. SEE SHT. A-1 & A-17
TO 4" D.S.
4"
6" C.I.
8" C.I.
SEE 1 / M-1
N
D

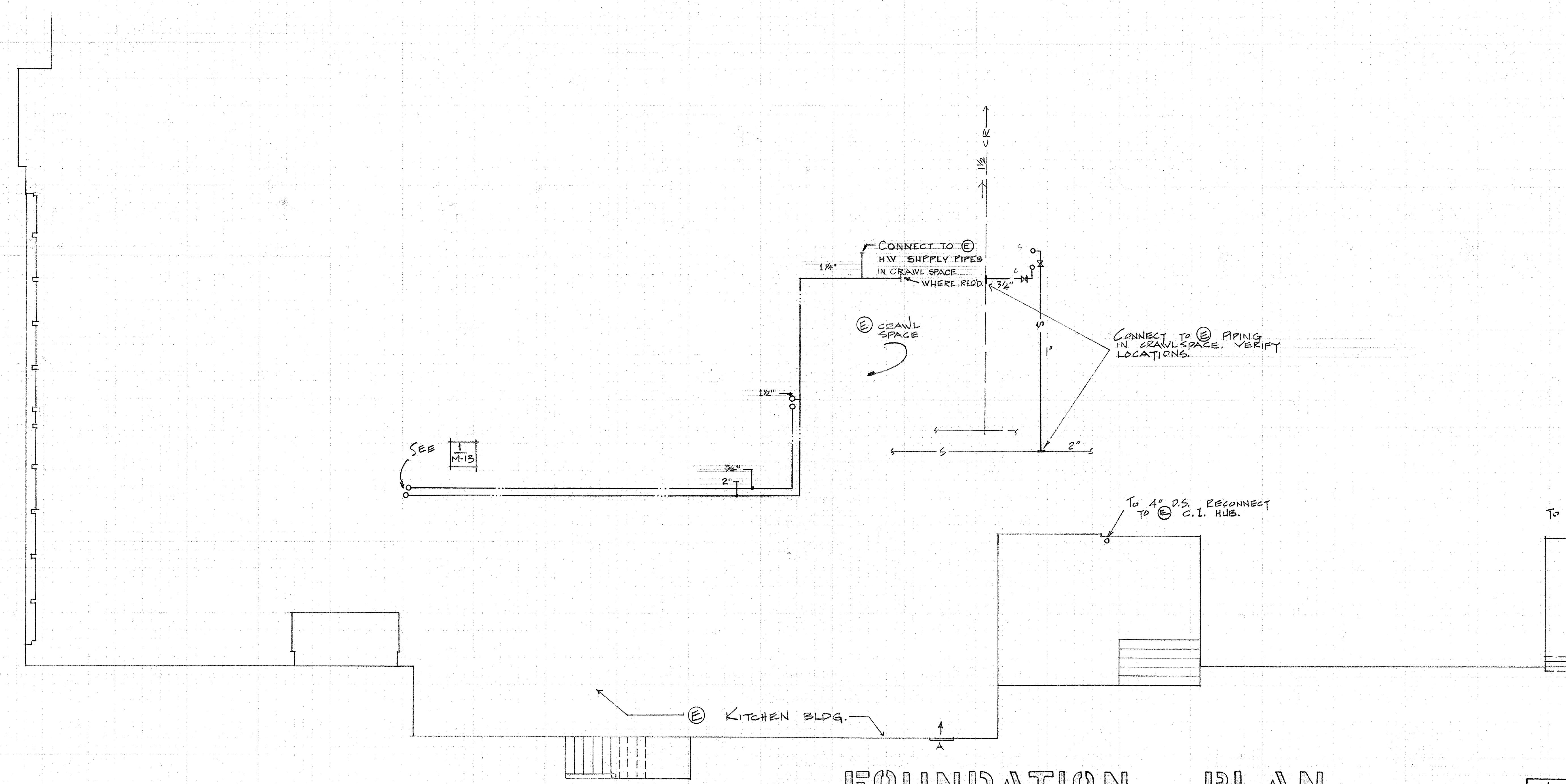
1½" CR
CONNECT TO Ⓔ HW SUPPLY PIPES IN CRAWL SPACE WHERE REQ'D.
1¼"
¾"
Ⓔ CRAWL SPACE
CONNECT TO Ⓔ PIPING IN CRAWLSPACE. VERIFY LOCATIONS.
1"
1½"
2"
S
SEE 1 / M-13
¾"
2"
TO 4" D.S. RECONNECT TO Ⓔ C.I. HUB.
Ⓔ KITCHEN BLDG.
A

FOUNDATION PLAN
SECTOR 'D' (1 / M-12)
⅛" = 1'0"

REGISTERED PROFESSIONAL ENGINEER
3365
R. F. Marquess
OREGON
NOV. 7, 1952
ROBERT F. MARQUESS

FOUNDATION MECH - SECTOR D
SWEET HOME HIGH SCHOOL
ADDITIONS AND ALTERATIONS 1974
DISTRICT 55 LINN COUNTY, OREGON

ARCHITECTS
HAMLIN, MARTIN, SCHULTZ & GEYER
AIA
159 W. 12TH EUGENE, OREGON 97401

M
12
JOB NO.

CLARE K. HAMLIN
Clare K Hamlin
EUGENE, OREGON

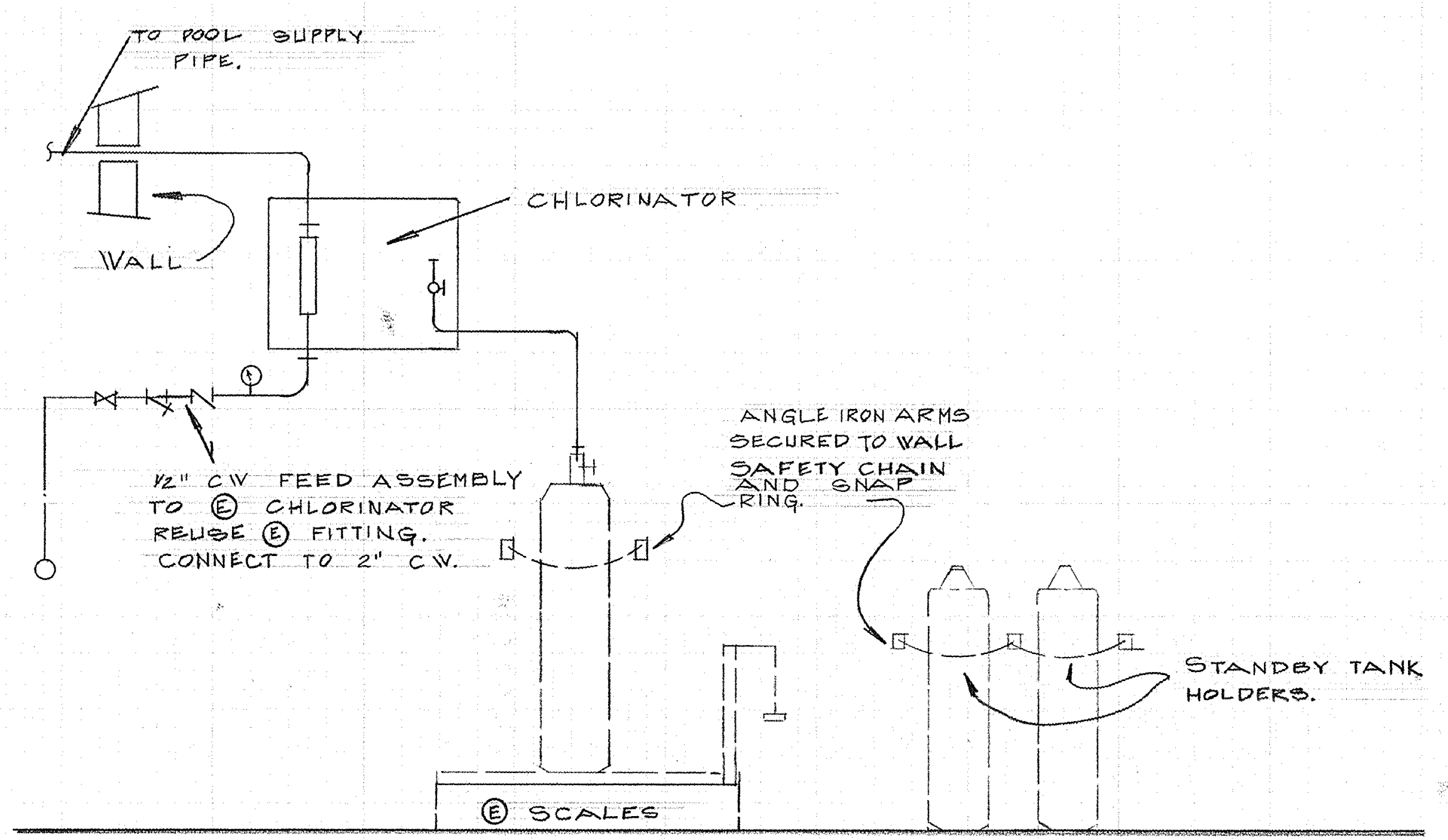
TO POOL SUPPLY PIPE.
WALL
CHLORINATOR
½" CW FEED ASSEMBLY TO Ⓔ CHLORINATOR REUSE Ⓔ FITTING. CONNECT TO 2" CW.
ANGLE IRON ARMS SECURED TO WALL SAFETY CHAIN AND SNAP RING.
STANDBY TANK HOLDERS.
Ⓔ SCALES

CHLORINATOR INSTALLATION DTL.

NO SCALE

A / M-13

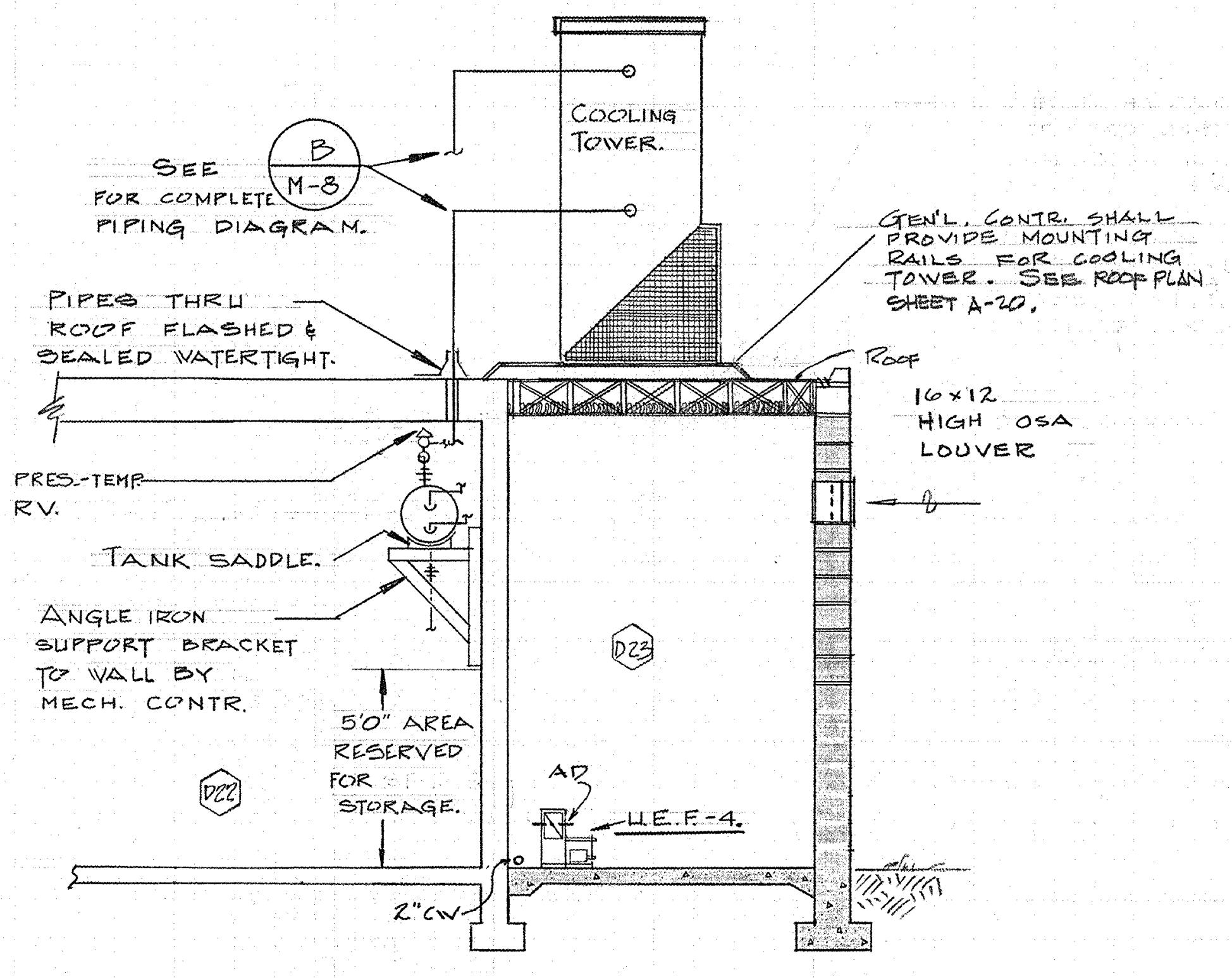
SEE B / M-8 FOR COMPLETE PIPING DIAGRAM.
COOLING TOWER.
GEN'L. CONTR. SHALL PROVIDE MOUNTING RAILS FOR COOLING TOWER. SEE ROOF PLAN SHEET A-20.
PIPES THRU ROOF FLASHED & SEALED WATERTIGHT.
ROOF
16 x 12 HIGH OSA LOUVER
PRES.-TEMP. RV.
TANK SADDLE.
ANGLE IRON SUPPORT BRACKET TO WALL BY MECH. CONTR.
5'0" AREA RESERVED FOR STORAGE.
D22
D23
AD
U.E.F.-4.
2" CW

SECTION

¼" = 1'0"

B / M-13

SEE 1 / M-10
2"
¾"
TO Ⓔ CONVERTER
CAP
CONNECT TO Ⓔ ¾" HW ROUTED TO KITCHEN.
¾"
2"
PIPING IN ATTIC
D1
D2
D3
D4
D5
D6
D7
D8
D9
D10
D11
D12
D13
D14
D15
D16
D17
D18
D19
D20
D21
D22
D23
D24
D25
D26
D27
D28
D29
D30
D31
Ⓔ FREEZER TO MOVE
Ⓔ CONDENSER ON ROOF MOVED BY MECH CONTR
Ⓔ FREEZER TO MOVE
¾" HWR
REMOVE Ⓔ HW TANK CONNECT 1½" HW LINE TO Ⓔ SUPPLY PIPES.
Ⓔ DISCHARGE
SEE 1 / M-12
Ⓔ FREEZERS MOVED TO THESE LOCATIONS
Ⓔ UV
Ⓔ U.V. TO REMAIN
Ⓔ CONDENSER MOVED TO THIS LOCATION. UNIT SET ON SUPPORTS AND LOCATED AS APPROVED BY ARCH'T.
14
RELOCATE Ⓔ CHLORINATOR, TANKS, AND SCALES TO RM. NO. D23
¾" POLYETHYLENE FLEXIBLE PIPE TO POOL SUPPLY PIPE. RECONNECT AT EXISTING FITTING.
Ⓔ 2" CW UP FROM GRADE.
SCALES & CHLORINE TANK.
D.S.
REROUTE BURIED 2" GALVANIZED CW PIPE AND EXPOSE IN ROOM. INSULATE EXPOSED PIPE.
CONNECT TO Ⓔ POOL SUPPLY PIPE.
STANDBY CHLORINE TANKS BY OWNER.
RELOCATED CHLORINATOR MOUNTED ON WALL.
SEE A / M-13
Ⓔ POOL MECH. ROOM
RECONNECT TO Ⓔ 2" BELOW GRADE.
Ⓔ FENCE
WH
A
CHASE
S.S.
2" V.T.R.
¾"
HB
L.
L.
WC-3
2½" V.T.R.
U.
U.
WH
W.C.-3
W.C.-1
W.C.-1
1¼" C.W. HEADER
F.D.-1
1½" V.T.R.
HB
½"
CUSPR
1½" V.T.R.
D.F.-2
½"
½"
WH
N
D

PLUMBING FLOOR PLAN

SECTOR 'D'

⅛" = 1'0"

1 / M-13

REGISTERED PROFESSIONAL ENGINEER
3365
R. F. Marquess
OREGON
NOV. 7, 1952
ROBERT F. MARQUESS

PLMBG - SECTOR D
SWEET HOME HIGH SCHOOL
ADDITIONS AND ALTERATIONS 1974
DISTRICT 55 LINN COUNTY, OREGON

ARCHITECTS
HAMLIN, MARTIN,
SCHULTZ & GEYER
AIA
159 W. 12TH EUGENE, OREGON 97401

M
13
JOB NO.

REGISTERED ARCHITECT
CLARE K. HAMLIN
Clare K. Hamlin
EUGENE, OREGON
STATE OF OREGON

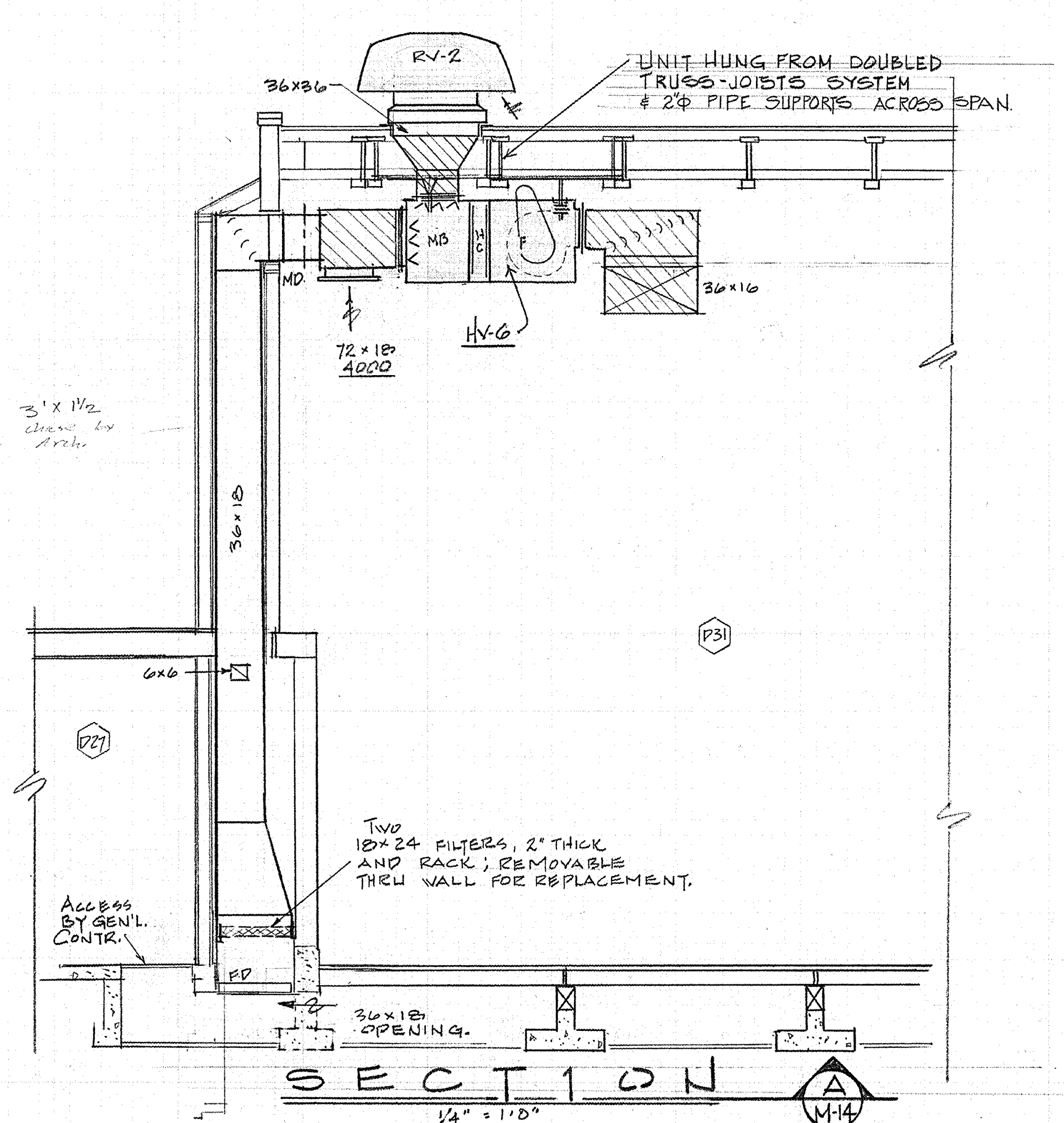
RV-2
36x36
UNIT HUNG FROM DOUBLED TRUSS-JOISTS SYSTEM & 2"Φ PIPE SUPPORTS ACROSS SPAN.
MB
HC
F
MD
36x16
72x18
4000
HV-6
3'x 1½
chase by Arch.
36x18
6x6
D31
D27
Two 18x24 filters, 2" thick and rack; removable thru wall for replacement.
Access by Gen'l. Contr.
FD
36x18 opening.

SECTION (A/M-14)

1/4" = 1'-0"

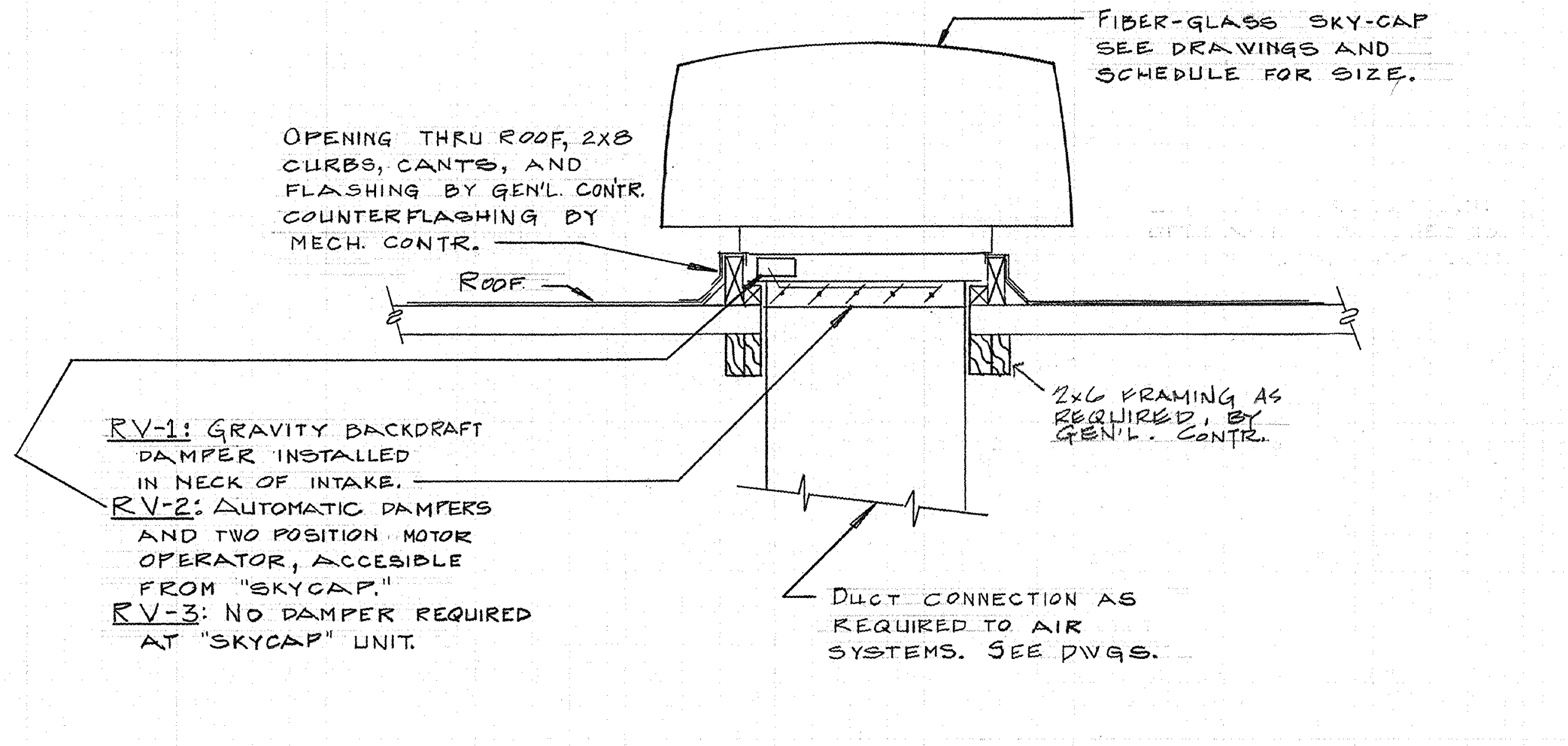
Fiber-glass sky-cap see drawings and schedule for size.
Opening thru roof, 2x8 curbs, cants, and flashing by gen'l. contr. counterflashing by mech. contr.
Roof
RV-1: Gravity backdraft damper installed in neck of intake.
RV-2: Automatic dampers and two position motor operator, accesible from "skycap."
RV-3: No damper required at "skycap" unit.
2x6 framing as required, by gen'l. contr.
Duct connection as required to air systems. See dwgs.

TYPICAL RV-1, 2, & 3 INSTALLATION DTL. (B/M-14)

NOT TO SCALE

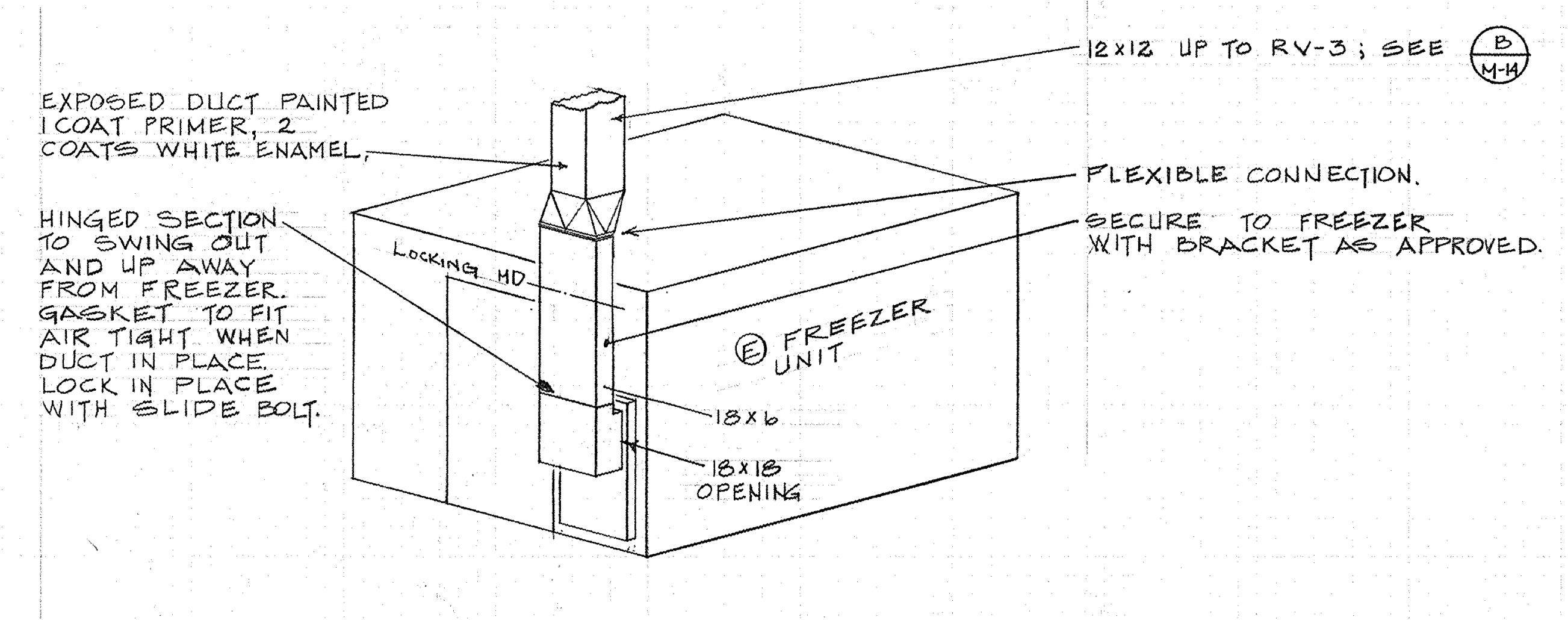
12x12 up to RV-3; see B/M-14
Exposed duct painted 1 coat primer, 2 coats white enamel.
Flexible connection.
Hinged section to swing out and up away from freezer. Gasket to fit air tight when duct in place. Lock in place with slide bolt.
Secure to freezer with bracket as approved.
Locking HD
E Freezer unit
18x6
18x18 opening

DETAIL (C/M-14)

NOT TO SCALE

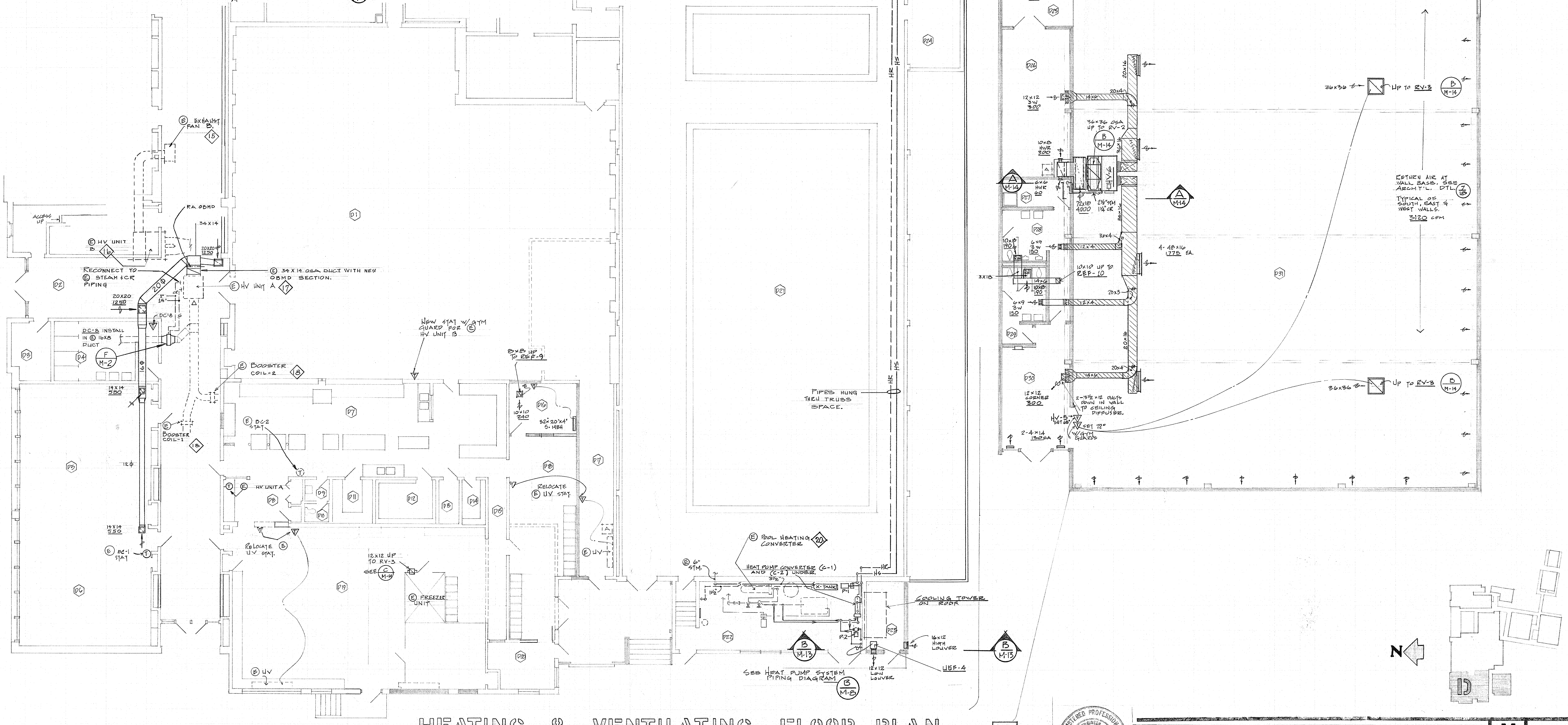
E Exhaust fan B. 15
Access up
E HV unit B 16
RA OBMD
34x14
20x20 1250
Reconnect to E steam & CR piping
E 34x14 OSA duct with new OBMD section.
E HV unit A 17
20Φ
CR
1"
1¼"
S
DC-8
DC-8 install in E 16x8 duct
F/M-2
16Φ
14x14 550
12Φ
E Booster coil-2 18
E Booster coil-1 18
E BC-2 stat
E BC-1 stat
New stat w/ gym guard for E HV unit B
8x8 up to REF-9
10x10 240
32"x20"x4" 5. MBH
E HV unit A
Relocate E UV stat.
E UV
12x12 up to RV-3 see C/M-14
E Freezer unit
A
D1
D2
D3
D4
D5
D6
D7
D8
D9
D10
D11
D12
D13
D14
D15
D16
D17
D18
D19
D20
D21
D22
D23
D24
D25
D26
D27
D28
D29
D30
D31
AAV'S
HR
HS
Pipes hung thru truss space.
E Pool heating converter 20
E 6" stm.
Heat pump converter (C-1) and (C-2) under.
3½"
1½"
X-tank
P-1
P-2
Cooling tower on roof
B/M-13
16x12 high louver
12x12 low louver
UEF-4
See heat pump system piping diagram B/M-8
Vent & access for mech. trench.
2-4x14 130 ea.
12x12 3W 300
36x36 OSA up to RV-2
B/M-14
10x8 HWR 300
A/M-14
6x6 HWR 60
HV-6
72x18 4000
2½" STM 1¼" CR
36x16
20x16
20x4
14x6
16x4
12x4
6x9 3W 150
10x8 190
3x18
10x10 up to REF-10
20x3
4- 48x16 1775 ea.
12x12 corner 300
2-3½x12 ducts down in wall to ceiling diffuser.
HV-5 set 68°
Set 72°
W/gym guards
2-4x14 130 ea
36x36 Up to RV-3
Return air at wall base. See Arch't'l. dtl. 7/18
Typical of south, east & west walls.
3120 CFM
N
D

HEATING & VENTILATING FLOOR PLAN

SECTOR 'D'

1/8" = 1'-0"

1/M-14

REGISTERED PROFESSIONAL ENGINEER
3365
R. F. Marquess
NOV. 7, 1962
ROBERT F. MARQUESS

HVAC - SECTOR D
SWEET HOME HIGH SCHOOL
ADDITIONS AND ALTERATIONS 1974
DISTRICT 55 LINN COUNTY, OREGON

ARCHITECTS
HAMLIN, MARTIN,
SCHULTZ & GEYER
AIA
159 W. 12TH EUGENE, OREGON 97401

M
14
JOB NO.

CLARE K. HAMLIN
Clare K Hamlin
EUGENE, OREGON

PLUG 6" PIPE END UNDER BASIC BID.
CONTINUE PIPE INSTALLATION UNDER ALT. "E"
SEE 1/M-1
6" PLUGGED TEE
F.L. = 540.40
F.L. = 539.85
4" D.S.
BEGINNING FLOW LINE = 543.10
28"X24"X36" CONC. PIT
F.C.O.
40"X12"X30" CONC. PIT
2" IRRIGATION CAP
VALVE IN TILE WITH C.I. COVER
VALVE IN TILE WITH C.I. COVER
2" IRRIGATION
24"X28"X36" CONC. PIT
26 X 32 X 30 CONCRETE PIT
24"X16"X18" CONC. PIT
S = 1/4"/FT.
S = 1%
C.O.
SEE 1/M-1
SEE 1/P-1
K M-2
J M-2
GAS COCK
TRAP
PIPE IN TRANSITE TILE.
4" C.I.
3/4" UP
SEE 1/M-16
UP TO L.P. TANK.
6" PLUG F.L. = 539.85
N

FOUNDATION PLAN

SECTOR 'E'

1/8" = 1'0"

1/M-15

FOUNDATION MECH - SECTOR E

SWEET HOME HIGH SCHOOL
ADDITIONS AND ALTERATIONS 1974
DISTRICT 55 LINN COUNTY, OREGON

ARCHITECTS
HAMLIN, MARTIN, SCHULTZ & GEYER
AIA
159 W. 12TH EUGENE, OREGON 97401

M
15
JOB NO.

REGISTERED PROFESSIONAL ENGINEER
3365
R. F. Marquess
OREGON
NOV. 7, 1952
ROBERT F. MARQUESS

REGISTERED ARCHITECT
CLARE K. HAMLIN
Clare K Hamlin
EUGENE, OREGON
STATE OF OREGON

GENERAL NOTES — CHEM. • SCIENCE AREAS

1. PROVIDE SHUTOFF STOPS IN ALL WATER AND GAS PIPES IN ACCESSIBLE LOCATION TO EACH INDIVIDUAL FIXTURE AND SUPPLY COCKS.
2. WATER AND GAS FITTINGS, VENTING, ACID TRAPS AND PIPING TO WASTE SYSTEM FURNISHED AND INSTALLED BY MECH. CONTR. VERIFY EQUIPMENT LOCATIONS BEFORE ROUGHING IN UTILITIES. ACID RESISTING SINKS IN CABINETS BY GEN'L. CONTR.
3. VENTS FROM ACID RESISTING SINKS SHALL BE OF ACID RESISTING MATERIAL TO 6" ABOVE SINK SPILL RIM; VENT PIPE EXTENSION FROM THAT POINT SHALL BE ACID RESISTING PIPE OR CAST IRON.

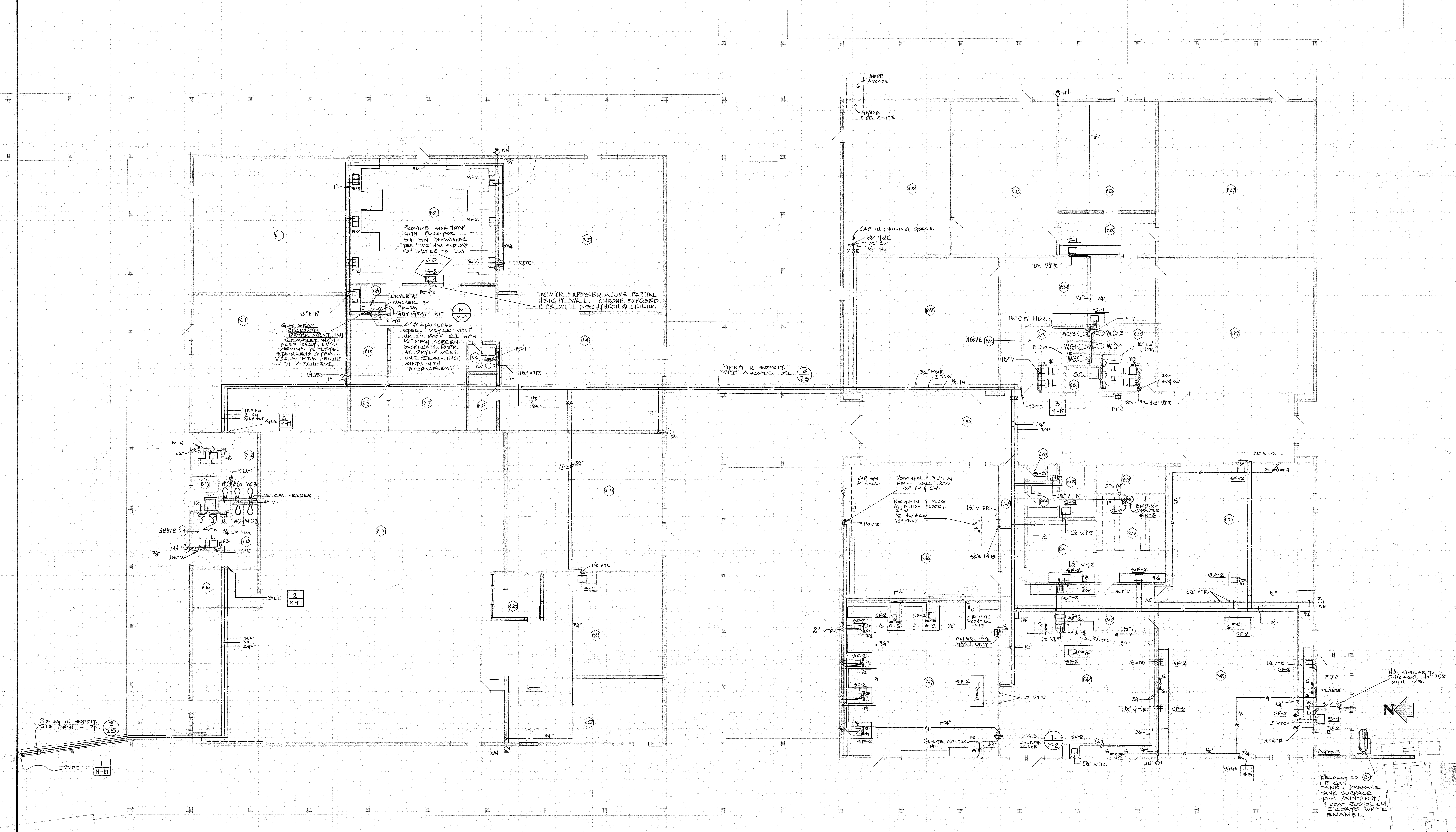
PROVIDE SINK TRAP WITH PLUG FOR BUILT-IN DISHWASHER "TEE" 1/2" HW AND CAP FOR WATER TO D.W.
1½" VTR EXPOSED ABOVE PARTIAL HEIGHT WALL. CHROME EXPOSED PIPE WITH ESCUTHEON @ CEILING
DRYER & WASHER BY OTHERS. GUY GRAY UNIT
GUY GRAY RECESSED DRYER VENT UNIT. TOP OUTLET WITH FLEX DUCT, LESS SERVICE OUTLETS. STAINLESS STEEL. VERIFY MTG. HEIGHT WITH ARCHITECT
4"⌀ STAINLESS STEEL DRYER VENT UP TO ROOF ELL WITH 1/4" MESH SCREEN. BACKDRAFT DMPR. AT DRYER VENT UNIT. SEAL DUCT JOINTS WITH "ETERNAFLEX".
M
M-2
VALVES
PIPING IN SOFFIT. SEE ARCHT'L. DTL.
4
25
3/4" HWR
2" CW
1½ HW
SEE
2
M-17
1½" C.W. HEADER
4" V.
ABOVE
FD-1
S.S.
W.C.
1½" CW HDR.
UNDER ARCADE
FUTURE PIPE ROUTE
CAP IN CEILING SPACE.
3/4" HWR
1½" CW
1¼" HW
1½" V.T.R.
1½" C.W. HDR.
4" V
W.C-3
W.C-1
SEE
3
M-17
CAP GAS AT WALL.
ROUGH-IN & PLUG AT FINISH WALL; 2" V 1/2" HW & CW.
ROUGH-IN & PLUG AT FINISH FLOOR, 2" V 1/2" HW & CW 1/2" GAS
SEE M-15
EMERG. SHOWER SH-E
REMOTE CONTROL UNIT
EMERG. EYE WASH UNIT
GAS SHUTOFF VALVE.
L
M-2
SF-2
S-1
S-2
S-3
S-4
FD-2
PLANTS
ANIMALS
HB: SIMILAR TO CHICAGO No. 952 WITH V.B.
N
RELOCATED LP GAS TANK. PREPARE TANK SURFACE FOR PAINTING; 1 COAT RUSTOLIUM, 2 COATS WHITE ENAMEL.
PIPING IN SOFFIT. SEE ARCHT'L. DTL.
3
25
SEE
1
M-10
SEE
M-15
WH

PLUMBING FLOOR PLAN

SECTOR 'E'

1
M-16

1/8" = 1'0"

REGISTERED PROFESSIONAL ENGINEER
3365
R. F. Marquess
OREGON
NOV. 7, 1952
ROBERT F. MARQUESS

PLMBG - SECTOR E
SWEET HOME HIGH SCHOOL
ADDITIONS AND ALTERATIONS 1974
DISTRICT 55 LINN COUNTY, OREGON

ARCHITECTS
HAMLIN, MARTIN, SCHULTZ & GEYER
AIA
159 W. 12TH EUGENE, OREGON 97401

M
16
JOB NO.

REGISTERED ARCHITECT
CLARE K. HAMLIN
Clare K Hamlin
EUGENE, OREGON
STATE OF OREGON

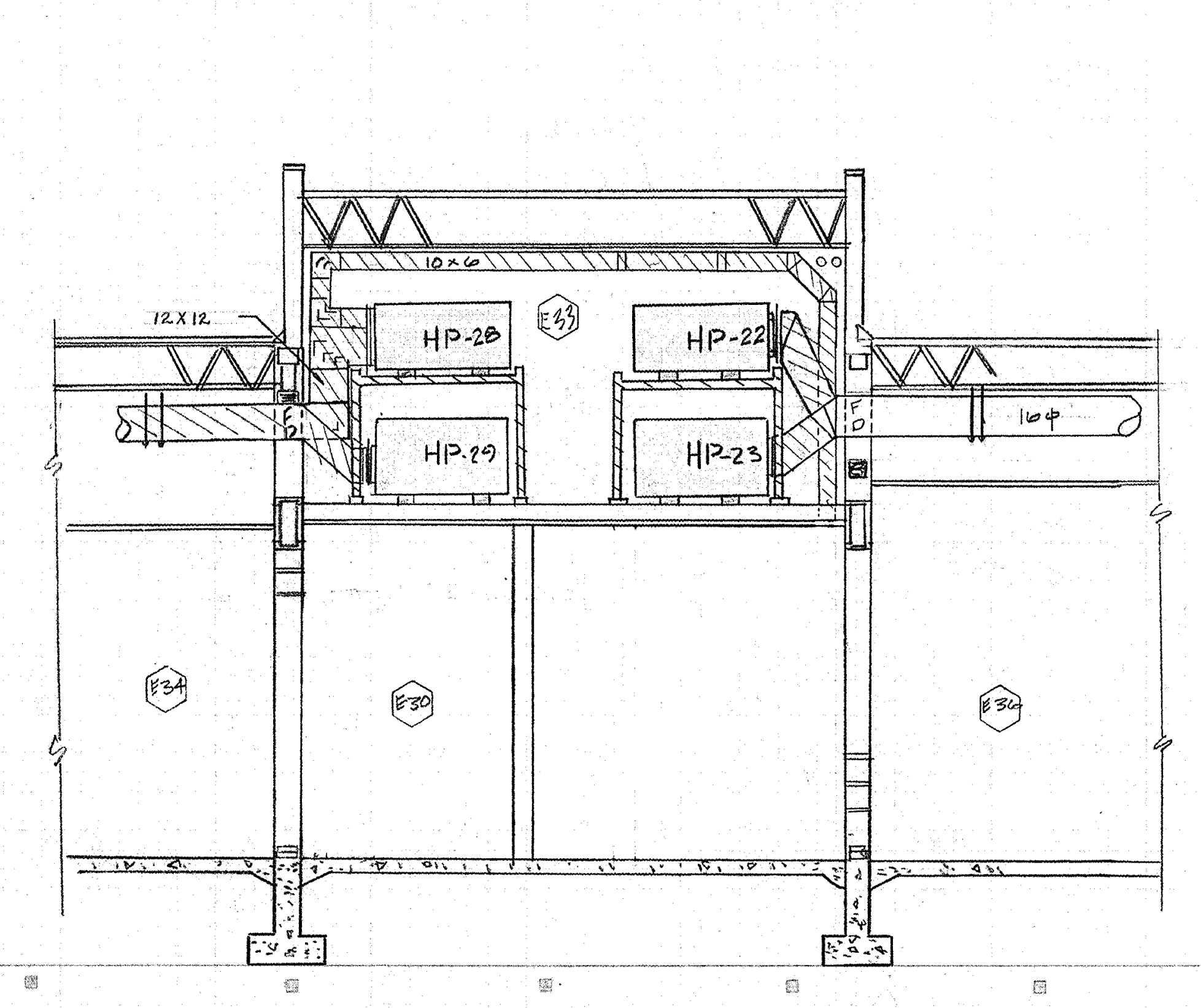

12x12
HP-28
HP-22
HP-29
HP-23
E33
14φ
E34
E32
E35

SECTION A M-17

1/4" = 1'-0"

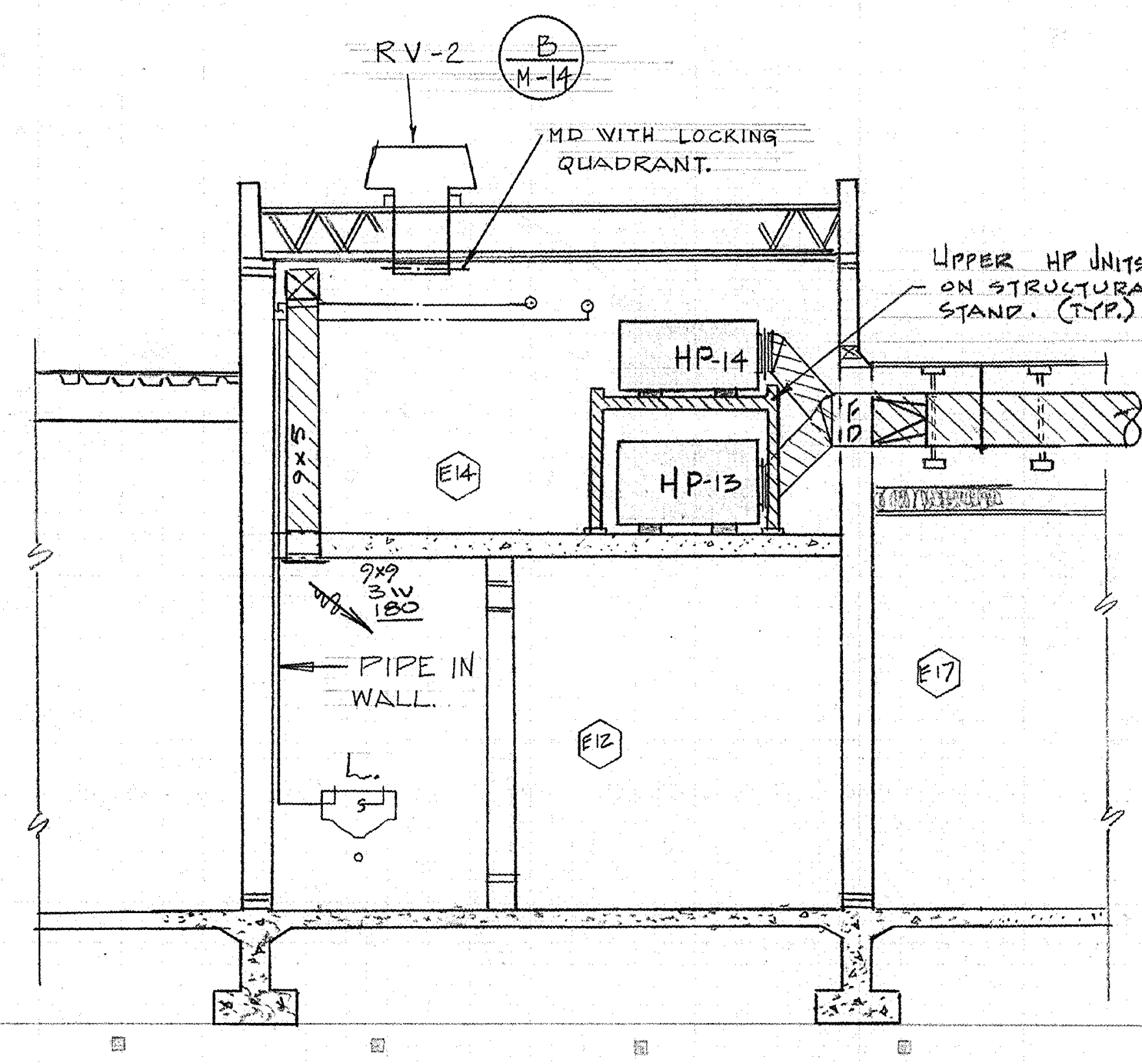

RV-2
B M-14
MD WITH LOCKING QUADRANT.
UPPER HP UNITS MOUNTED ON STRUCTURAL STEEL STAND. (TYP.) SEE A M-7
HP-14
HP-13
14" I.D.
E14
9x9 3W 180
PIPE IN WALL.
E12
E17

SECTION B M-17

1/4" = 1'-0"

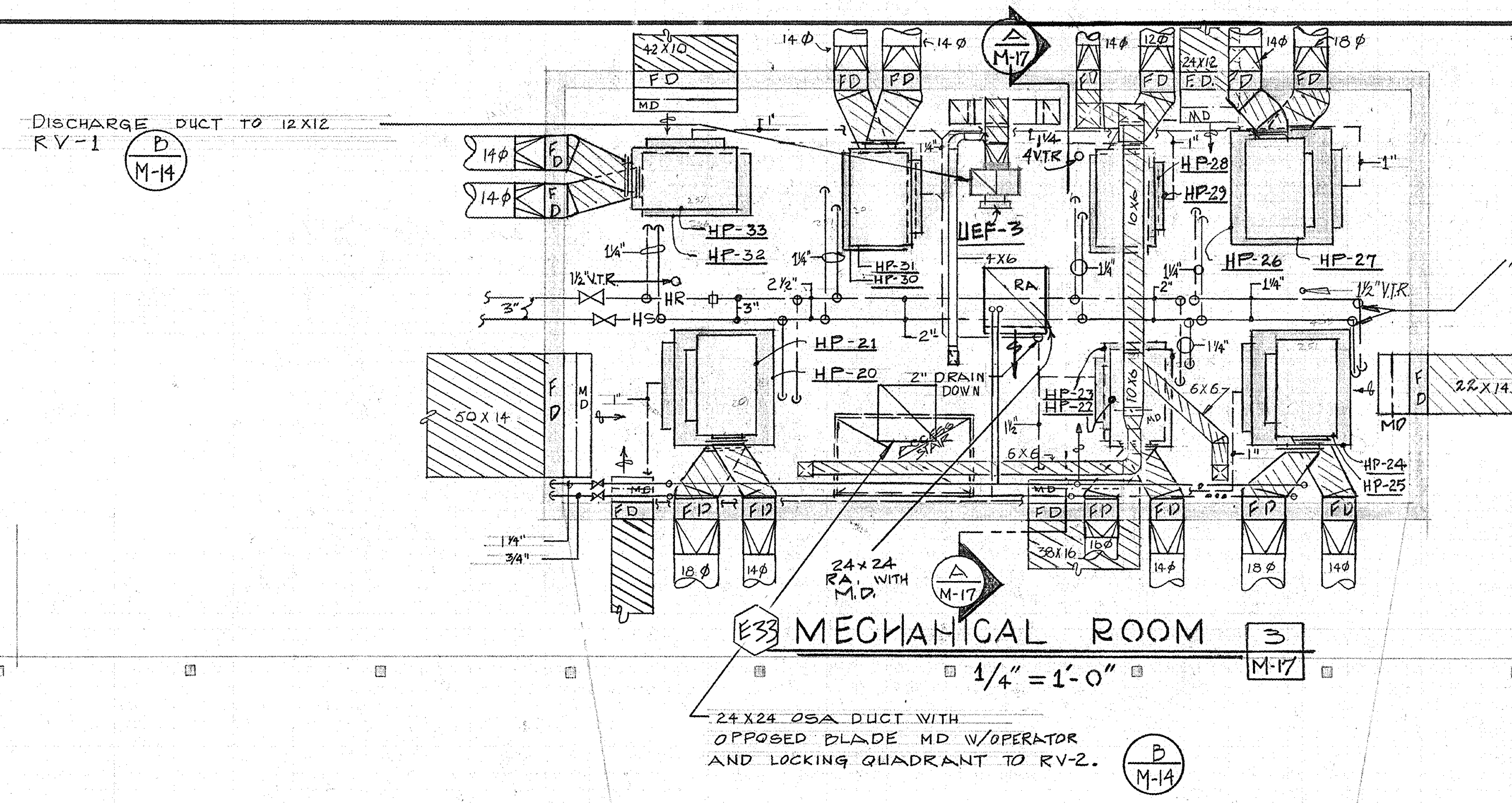

DISCHARGE DUCT TO 12x12 RV-1 B M-14
A M-17
14φ
HP-33
HP-32
HP-31
HP-30
UEF-3
HP-28
HP-29
HP-26
HP-27
AAVS
HP-21
HP-20
2" DRAIN DOWN
RA
22x14
50x14
HP-24
HP-25
24x24 RA. WITH M.D.
A M-17

E33 MECHANICAL ROOM 3 M-17

1/4" = 1'-0"

24x24 OSA DUCT WITH OPPOSED BLADE MD W/OPERATOR AND LOCKING QUADRANT TO RV-2. B M-14

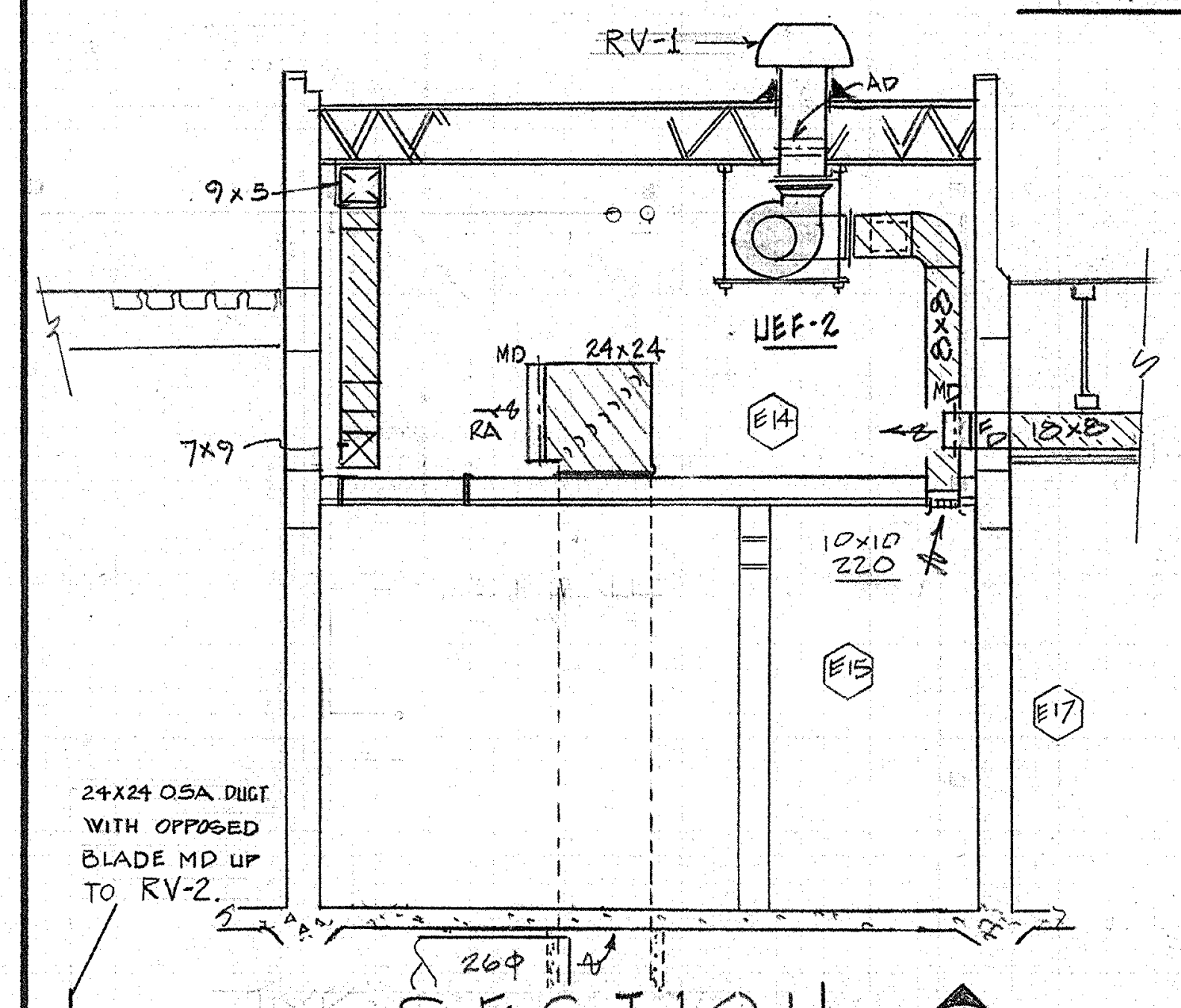

RV-1
9x5
UEF-2
24x24 RA
MD
E14
7x9
10x10 220
E15
E17
24x24 OSA DUCT WITH OPPOSED BLADE MD UP TO RV-2.

SECTION C M-17

1/4" = 1'-0"

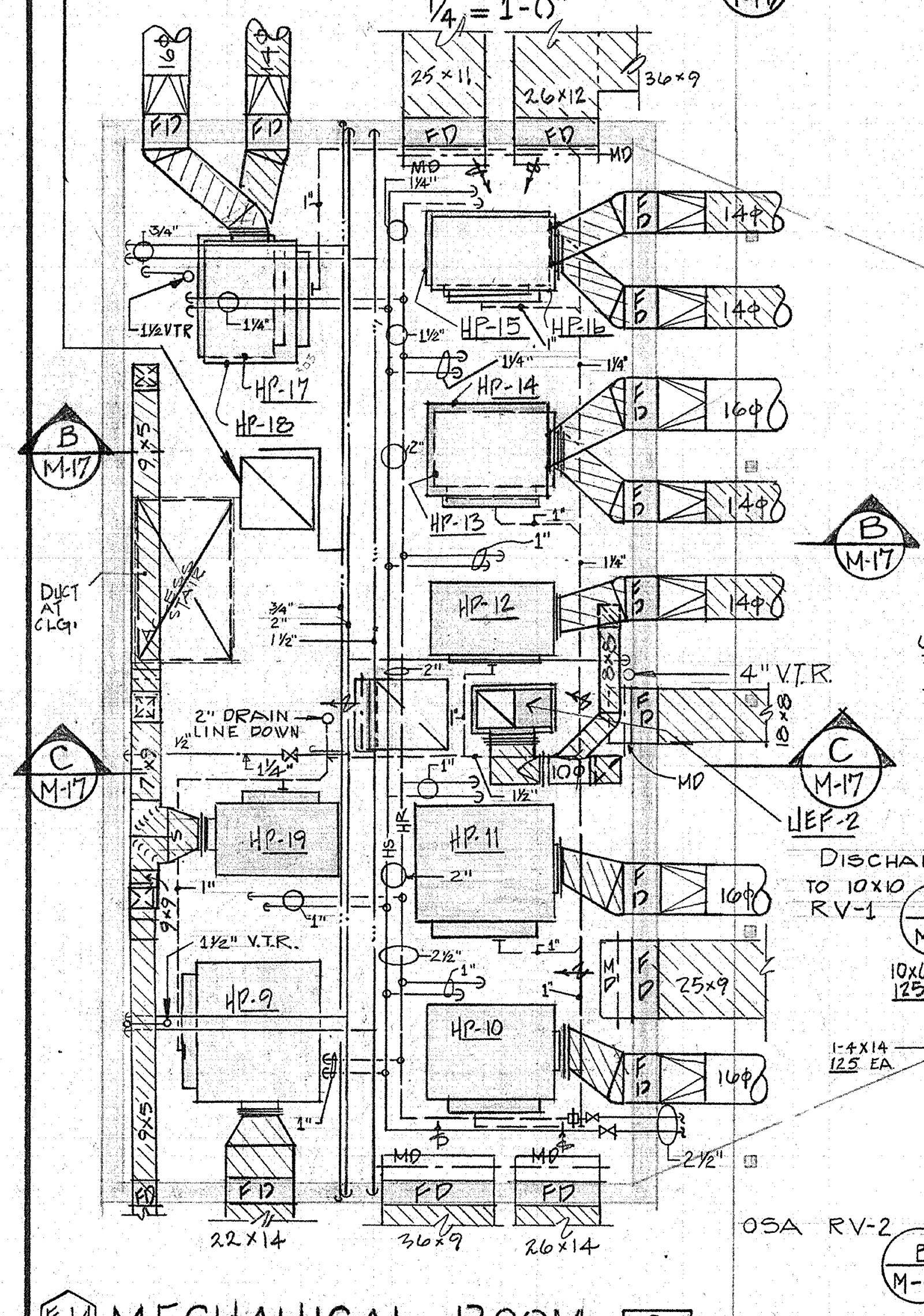

B M-17
HP-17
HP-18
HP-15
HP-14
HP-13
HP-12
HP-11
HP-19
HP-9
HP-10
2" DRAIN LINE DOWN
4" VTR
C M-17
UEF-2
DISCHARGE TO 10x10 RV-1 B M-14
22x14
26x14
OSA RV-2 B M-14

E14 MECHANICAL ROOM 2 M-17

1/4" = 1'-0"

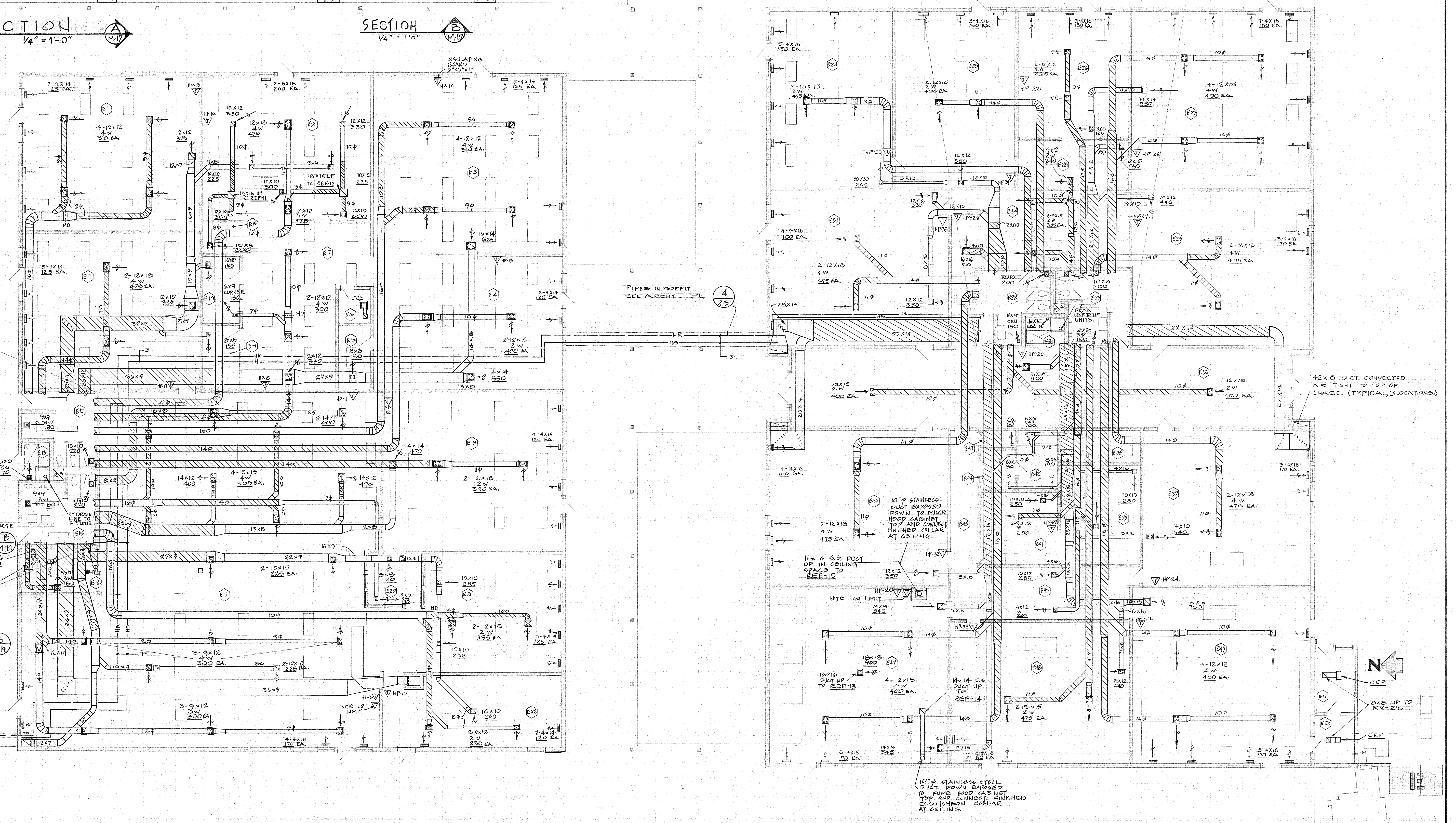

PIPES IN SOFFIT SEE ARCHT'L DTL. 4 25
INSULATING BOARD
4-12x12 4W 310 EA.
2-12x18 4W 475 EA.
32x9
27x9
36x9
17x8
22x9
16x9
50x14
22x14
42x18 DUCT CONNECTED AIR TIGHT TO TOP OF CHASE. (TYPICAL, 3 LOCATIONS.)
10"φ STAINLESS DUCT EXPOSED DOWN TO FUME HOOD CABINET TOP AND CONNECT FINISHED COLLAR AT CEILING.
14x14 S.S. DUCT UP IN CEILING SPACE TO REF-15
16x16 DUCT UP TO REF-13
14x14 S.S. DUCT UP TO REF-14
10"φ STAINLESS STEEL DUCT DOWN EXPOSED TO FUME HOOD CABINET TOP AND CONNECT FINISHED ESCUTCHEON COLLAR AT CEILING.
NITE LOW LIMIT
NITE LO LIMIT
CEF
8x8 UP TO RV-2'S
N

PIPES IN SOFFIT SEE ARCH'L DETAIL. 3 25

SEE 1 M-11

HEATING, VENTILATING & A./C. FLOOR PLAN 1 M-17

SECTOR 'E'

1/8" = 1'-0"

REGISTERED PROFESSIONAL ENGINEER
3365
R. F. Marquess
OREGON
NOV. 7, 1961
ROBERT F. MARQUESS

HVAC - SECTOR E
SWEET HOME HIGH SCHOOL
ADDITIONS AND ALTERATIONS 1974
DISTRICT 55 LINN COUNTY, OREGON

ARCHITECTS
HAMLIN, MARTIN, SCHULTZ & GEYER AIA
159 W. 12TH EUGENE, OREGON 97401

M
17
JOB NO.

REGISTERED ARCHITECT
CLARE K. HAMLIN
Clare K Hamlin
EUGENE, OREGON
STATE OF OREGON

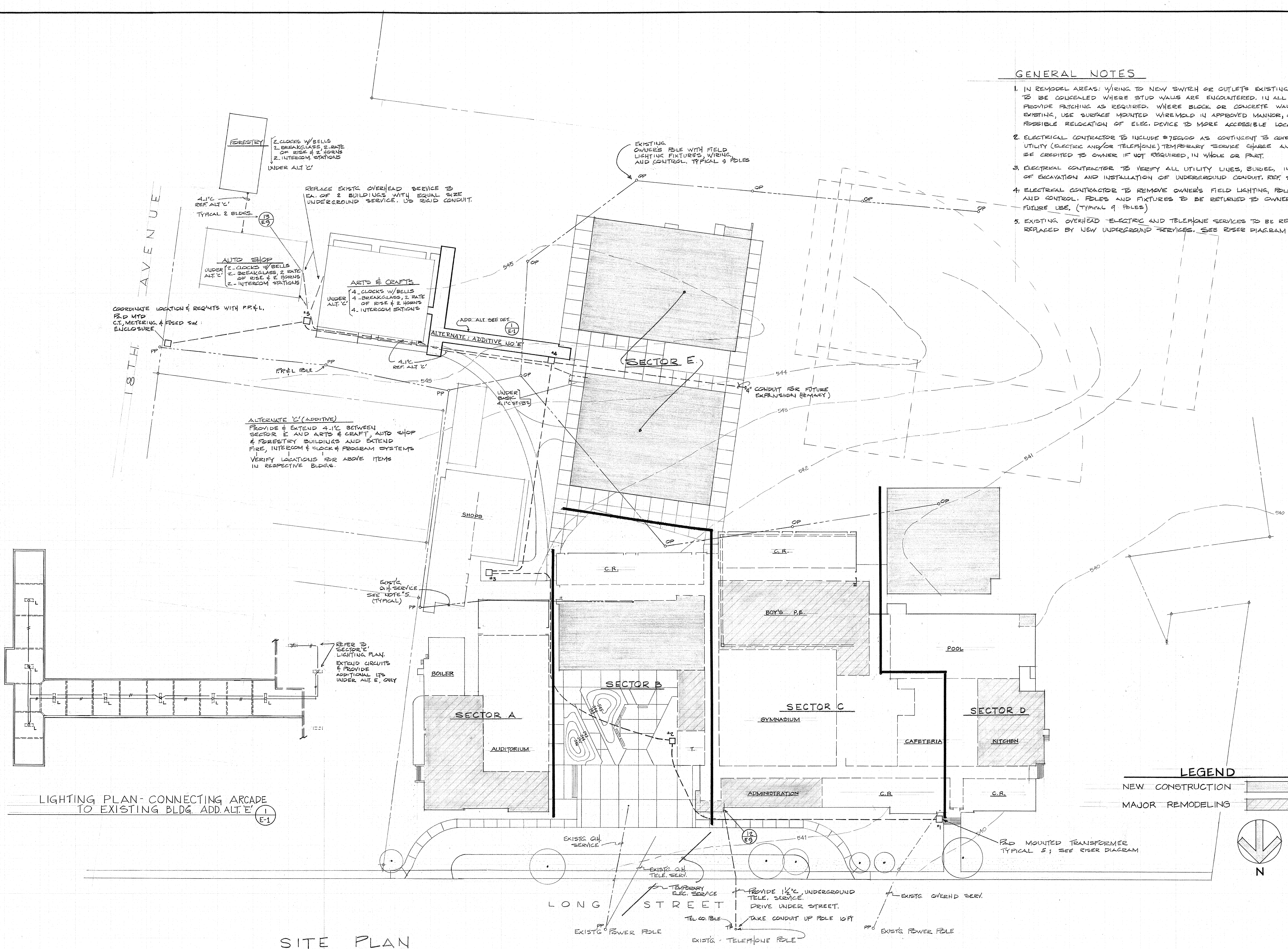
FORESTRY
2_CLOCKS W/BELLS
2_BREAKGLASS, 2_RATE OF RISE & 2 HORNS
2_INTERCOM. STATIONS
UNDER ALT 'C'
4_1"C REF. ALT 'C'
TYPICAL 2 BLDGS.
13 / E9
REPLACE EXISTG OVERHEAD SERVICE TO EA. OF 2 BUILDINGS WITH EQUAL SIZE UNDERGROUND SERVICE. US RIGID CONDUIT.
18TH AVENUE
AUTO SHOP
UNDER ALT. 'C'
2_CLOCKS W/BELLS
2_BREAKGLASS, 2 RATE OF RISE & 2 HORNS
2_INTERCOM STATIONS
ARTS & CRAFTS
UNDER ALT. 'C'
4_CLOCKS W/BELLS
4_BREAKGLASS, 2 RATE OF RISE & 2 HORNS
4_INTERCOM STATIONS
COORDINATE LOCATION & REQ'MTS WITH P.P.&L.
PAD MTD C.T., METERING & FUSED SW. ENCLOSURE
#5
PP
ADD. ALT. SEE DET. 1 / E-1
ALTERNATE: ADDITIVE NO 'E'
#4
4_1"C REF. ALT 'C'
P.P.&L POLE
545
UNDER BASIC 4_1"C STUBS
EXISTING OWNER'S POLE WITH FIELD LIGHTING FIXTURES, WIRING, AND CONTROL. TYPICAL 9 POLES
OP
SECTOR E.
544
4" CONDUIT FOR FUTURE EXPANSION (PRIMARY)
543
542
541
540
ALTERNATE 'C' (ADDITIVE)
PROVIDE & EXTEND 4_1"C BETWEEN SECTOR E AND ARTS & CRAFT, AUTO SHOP & FORESTRY BUILDINGS AND EXTEND FIRE, INTERCOM & CLOCK & PROGRAM SYSTEMS
VERIFY LOCATIONS FOR ABOVE ITEMS IN RESPECTIVE BLDGS.
SHOPS
#3
EXIST'G O.H. SERVICE SEE NOTE #5. (TYPICAL)
C.R.
BOY'S P.E.
POOL
REFER TO, SECTOR 'E' LIGHTING PLAN.
EXTEND CIRCUITS & PROVIDE ADDITIONAL LTS UNDER ALT. E, ONLY
L
BOILER
SECTOR A
AUDITORIUM
SECTOR B
#2
T.
SECTOR C
GYMNASIUM
CAFETERIA
SECTOR D
KITCHEN
ADMINISTRATION
C.R.
#1
12 / E9
EXISTG O.H. SERVICE
EXIST'G O.H. TELE. SERV.
TEMPORARY ELEC. SERVICE
PROVIDE 1½"C UNDERGROUND TELE. SERVICE. DRIVE UNDER STREET.
TAKE CONDUIT UP POLE 10 FT
TEL. CO. POLE
TP
EXISTG POWER POLE
EXISTG · TELEPHONE POLE
EXISTG OVERHD SERV.
EXIST'G POWER POLE
PAD MOUNTED TRANSFORMER TYPICAL 5; SEE RISER DIAGRAM
LONG STREET
N

LIGHTING PLAN- CONNECTING ARCADE TO EXISTING BLDG. ADD. ALT. 'E' 1 / E-1

SITE PLAN

SCALE: 1/32" = 1'-0"

NOTE: PROVIDE TEMPORARY SERVICE (ELECT.) TO SECTOR 'B' DURING DEMOLITION PERIOD. SEE ARCHITECTURAL DWG. A-2 FOR SUGGESTED ROUTING.

GENERAL NOTES

1. IN REMODEL AREAS: WIRING TO NEW SWITCH OR OUTLETS EXISTING WALLS TO BE CONCEALED WHERE STUD WALLS ARE ENCOUNTERED. IN ALL CASES PROVIDE PATCHING AS REQUIRED. WHERE BLOCK OR CONCRETE WALLS ARE EXISTING, USE SURFACE MOUNTED WIREMOLD IN APPROVED MANNOR, OR VERIFY W/ ARCH. POSSIBLE RELOCATION OF ELEC. DEVICE TO MORE ACCESSIBLE LOCATION.
2. ELECTRICAL CONTRACTOR TO INCLUDE $750.00 AS CONTINGENT TO COVER UTILITY (ELECTRIC AND/OR TELEPHONE) TEMPORARY SERVICE CHARGE AND SHALL BE CREDITED TO OWNER IF NOT REQUIRED, IN WHOLE OR PART.
3. ELECTRICAL CONTRACTOR TO VERIFY ALL UTILITY LINES, BURIED, IN AREAS OF EXCAVATION AND INSTALLATION OF UNDERGROUND CONDUIT. REF. SPEC'S 16B_1D.
4. ELECTRICAL CONTRACTOR TO REMOVE OWNER'S FIELD LIGHTING, POLES, WIRING AND CONTROL. POLES AND FIXTURES TO BE RETURNED TO OWNER FOR FUTURE USE. (TYPICAL 9 POLES)
5. EXISTING OVERHEAD ELECTRIC AND TELEPHONE SERVICES TO BE REMOVED; REPLACED BY NEW UNDERGROUND SERVICES. SEE RISER DIAGRAM.

LEGEND

NEW CONSTRUCTION ▒

MAJOR REMODELING ▨

REGISTERED PROFESSIONAL ENGINEER 3926 OREGON JAN. 8, 1956 FRED W. MARTINSON, JR.

Fred W Martinson

Nov. 19, 1973

ELECTRICAL SITE PLAN

SWEET HOME HIGH SCHOOL
ADDITIONS AND ALTERATIONS 1974
DISTRICT 55 LINN COUNTY, OREGON

ARCHITECTS
HAMLIN, MARTIN, SCHULTZ & GEYER
AIA
159 W. 12TH EUGENE, OREGON 97401

E
1
JOB NO.

REGISTERED ARCHITECT CLARE K. HAMLIN Clare K Hamlin EUGENE, OREGON STATE OF OREGON

LIGHTING FIXTURE SCHEDULE

TYPE	DESCRIPTION	MANUFACTURER	LAMP DATA NO.	LAMP DATA CODE	TYPE OF MOUNTING	REMARKS
A	2x4 BOX FLUR	DAYBRITE-24SM4RA	4	T40WWX	SURFACE	
B	1x4 BOX FLUR	DAYBRITE-1X42-718	2	T40WWX	"	
C	GEN. FLUR. WRAP. 10"x48"	GLOBE -Y3802-48RS	2	T40WWX	PENDANT	
D	GEN. FLUR. WRAP. 10"x48"	GLOBE- Y3803-48RS	3	T40WWX	"	
E	DWN. FLUR. 17"x48"	GLOBE- MY3254-48RS	4	T40WWX	"	
F	SAFE-DARK RM LT.	WAGNER/WOODRUFF S-38102/0A/3	2	25W/IF	SURFACE	2 FILTER LTS.
G	VANDAL RES. 12x48	DAYBRITE-V11240-4	2	T40WWX	SURFACE	
H	VANDAL RES. 12x96	DAYBRITE- V11240-8	4	T40WWX	"	
K	VAPOR PROOF/VANDAL RES.	DAYBRITE-TR41241	2	T40WWX	"	
L	VANDAL RES EXT.	MARCO - N41	1	T40WWX	"	W/ 0° BALLASTS
M	VANDAL RES EXT.	MARCO - N43	2	T40WWX	"	W/ 0° BALLASTS
N	DWN. FLUR 48x48	DAYBRITE -4x48-768	8	T40WWX	PENDANT	
P	PORCEL. SOCKET	P & S - 37	1	100 W/IF	SURFACE	
Q	INCAND.	CROUSE-HINDS-EVCX	1	100W/IF	"	EXPLOSION PROOF
R	GENERAL LITE WRAP-AROUND	—	2	T40 WWX	PENDANT	RELOCATED 2T PENDANT WITH CAP.
S	GYM LITE	WIDE-LITE-IL-1005-SG-WRB-B-QD-LQ	1	150Q/DC	"	PROVIDE WITH WIRE GUARD 400XWG24
T	LIGHTTRACK	LIGHTOLIER-7506 & 7507 TRACK 3-7631 FIXTURES		Q250 PAR 38SP	SURFACE	LIGHT TRACK 3 FIXTURE
U	UNBREAKABLE FLUR	MARCO/DURATHON-N40	1	T40WWX	SURFACE/WALL	
V	2x2 FLUR	DAYBRITE-22SM2UA	2	F40U	SURFACE	
W	DARK RM. LITE	PRESCOLITE - 73463 (SPECIAL LET)	2	F6T5	RECESSED	DARK ROOM IN USE UNBREAKABLE LENS @ + 60"
X	EXIT LITE- UNIVERSAL MTG.	MARCO-GS51SW	2	20WT6½	SURFACE/WALL	
Y	INCAND. DOWNLITE	MARCO-SP9-10P	2	100W/IF	SURFACE	
Z	UNSHIELDED FLUR	GLOBE S951-48RS	1	T40WWX	SURFACE	REF ARCH. SHOW CASE DETAIL 1/38
AA	EXTERIOR BRKT	KENALL 3663 D	1	100W/IF	SURF/WALL	+ 7'-0"
AB	BRKT SHELF LT.	DAYBRITE 8141 W	1	T40WWX	SURF/WALL	+6'-0"

ELECTRICAL SYMBOLS

ITEM	DESCRIPTION	GENERAL MOUNTING HEIGHT -FIN. FLR TO ℄
B/E6 ---▽	DETAIL OR SECTION REFERENCE: DETAIL LETTER. / SHEET NO.	
(E)	EXISTING CONDITIONS.	
Ⓙ	SPECIAL AND MOTOR CONNECTION.	
☒	MAGNETIC STARTER.	
	DISCONNECT SWITCH.	
	CONDUIT & WIRE	
	BRANCH CIRCUIT #12 WIRES SHOWN.	
→	HOME RUN TO PANEL #10 WIRES SHOWN.	
— — —	CONDUIT UNDER GROUND OR SLAB.	
	CONDUIT UP, DOWN.	
	CONDUIT, STUBBED & CAPPED.	
	FLEXIBLE CONDUIT.	
Ⓙ	JUNCTION BOX.	
	CONDUIT ENTRANCE SEAL.	
	SWITCHES	
\$ \$3 \$4	WALL SWITCHES, SINGLE POLE, 3-WAY 4-WAY	4'-0"
\$P	SWITCH WITH PILOTLIGHT TOGGLE.	4'-0"
	RECEPTACLES	
	DUPLEX RECEPTACLE	1'-0" OR AS SHOWN.
	DUPLEX RECEPTACLE ABOVE COUNTER	COUNTER +6" OR AS SHOWN
WP	RECEPTACLE WITH WEATHERPROOF COVERPLATE.	1'-0"
30	240 VOLT RECEPTACLE. AMPERAGE AS SHOWN.	1'-0" OR AS SHOWN.
	DUPLEX RECEPTACLE, HALF-SWITCHED.	
	CLOCK RECEPTACLE.	8'-0"
18"	PLUGMOLD. RECEPTACLE SPACING AS SHOWN.	42" OR AS SHOWN.
	SERVICE & DISTRIBUTION	
▨	SWITCHBOARD DISTRIBUTION ASSEMBLY.	FLOOR MOUNTED
	PANELBOARD	6'-0" TO TOP.
CT	CURRENT TRANSFORMER CABNET.	
	METER SOCKET	
⏚	CODE GROUND.	
	CIRCUIT BREAKER.	
	FUSED SWITCH.	
	LIGHTING FIXTURES	
	FLUORESCENT FIXTURE.	SEE FIXTURE SCHEDULE. ↓
	FLUORESCENT STRIPLIGHT.	
○ □	INCANDESCENT FIXTURE.	
	WALL MOUNTED FIXTURE.	
→	FLOODLIGHT.	
	EXIT LIGHT.	
●	FIXTURE ON NIGHT LIGHT CIRCUIT.	
	TELEPHONE	
▼	WALL TELEPHONE OUTLET.	1'-0"
TB	TERMINAL BOARD.	CENTER ON WALL.
6" →TB	HOME RUN TO TERMINAL BOARD.	
	FIRE ALARM	
F	BREAKGLASS.	5'-0"
Ⓕ	RATE OF RISE DETECTOR.	CEILING
	HORN OUTDOOR, WEATHERPROOF.	± 12'-0"
Ⓘ	IONIZATION DETECTOR.	CEILING
TV	TELEVISION OUTLET	+1'-0"
	BACKGROUND MUSIC	
	ROOM SPEAKER.	@ + 90"
	INTERCOM MASTER (EXISTING 'DUKANE' DESK TYPE.)	
	ELECTRIC HEATING	
2000	BASEBOARD HEATER.	FLOOR
▽	THERMOSTAT.	
	LIGHTING CONTROL	
Ⓟ	PHOTOCELL.	ON ROOF FACING NORTH.
TS	TIME SWITCH	5'-0"
☒C	LIGHTING CONTRACTOR	±5'-0"
\$D	DIMMER SWITCH, INTEGRAL WALL BOX.	4'-0"
D	DIMMER, REMOVE.	CEILING SPACE.
Ⓓ	DIMMER REMOVE CONTROL	4'-0"
SSG	SOLID STATE GENERATOR (EMERGENCY LTG SYSTEM)	5'-0"

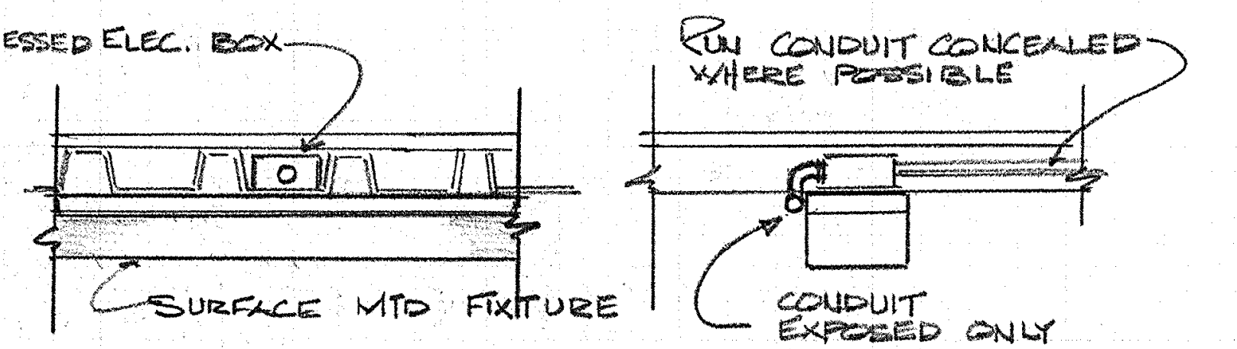
RECESSED ELEC. BOX
SURFACE MTD FIXTURE
RUN CONDUIT CONCEALED WHERE POSSIBLE
CONDUIT EXPOSED ONLY CROSSING RIBS. SEE NOTE BELOW

ARCADE LIGHTS AND CONDUIT

1/E2

SCALE 1"=1'-0"

NOTE: CONDUIT WHEN EXPOSED UNDER DECK, TO RUN ONLY AT RIGHT ANGLES TO RIBS.

NOTE:

ROOF IS 3" CEMENT FIBERPLANK W/ ROOF TRUSSES, 4' O.C. LIGHTING FIXTURE OUTLETS SHALL BE SURFACE ON DECKING WITH CONDUIT RUN EXPOSED AND ALL OTHER CONDUIT RUNS SHALL BE ROUTED IN WALLS OR BENEATH CONCRETE SLAB FLOOR WHEREVER POSSIBLE. PLAN ALL ROUGH-IN CAREFULLY AND COORDINATE CLOSELY WITH GENERAL CONTRACTOR.

PROVIDE MINIMUM OF 12"x12" - 1/8" STEEL PLATE W/ ROUND HD BOLTS TO BOX BELOW USE APPROVED LOCK WASHERS: PROVIDE SHOP DWG OF MOUNTG PROVISION.

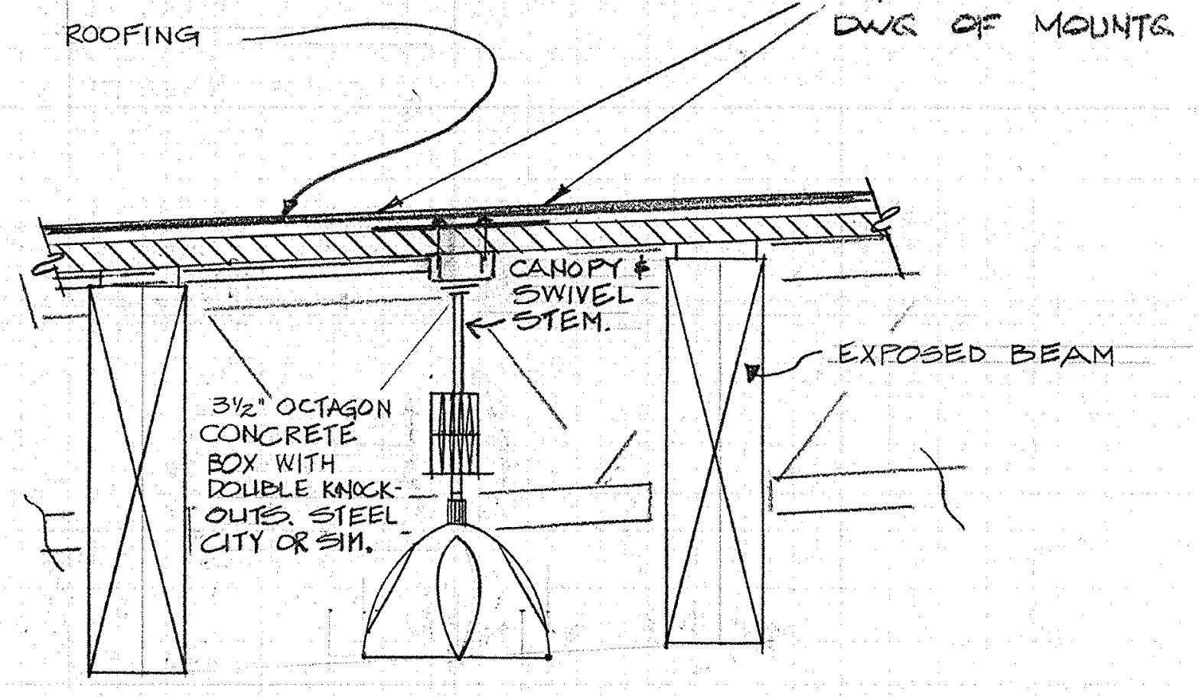
ROOFING
CANOPY & SWIVEL STEM.
EXPOSED BEAM
3½" OCTAGON CONCRETE BOX WITH DOUBLE KNOCK-OUTS. STEEL CITY OR SIM.

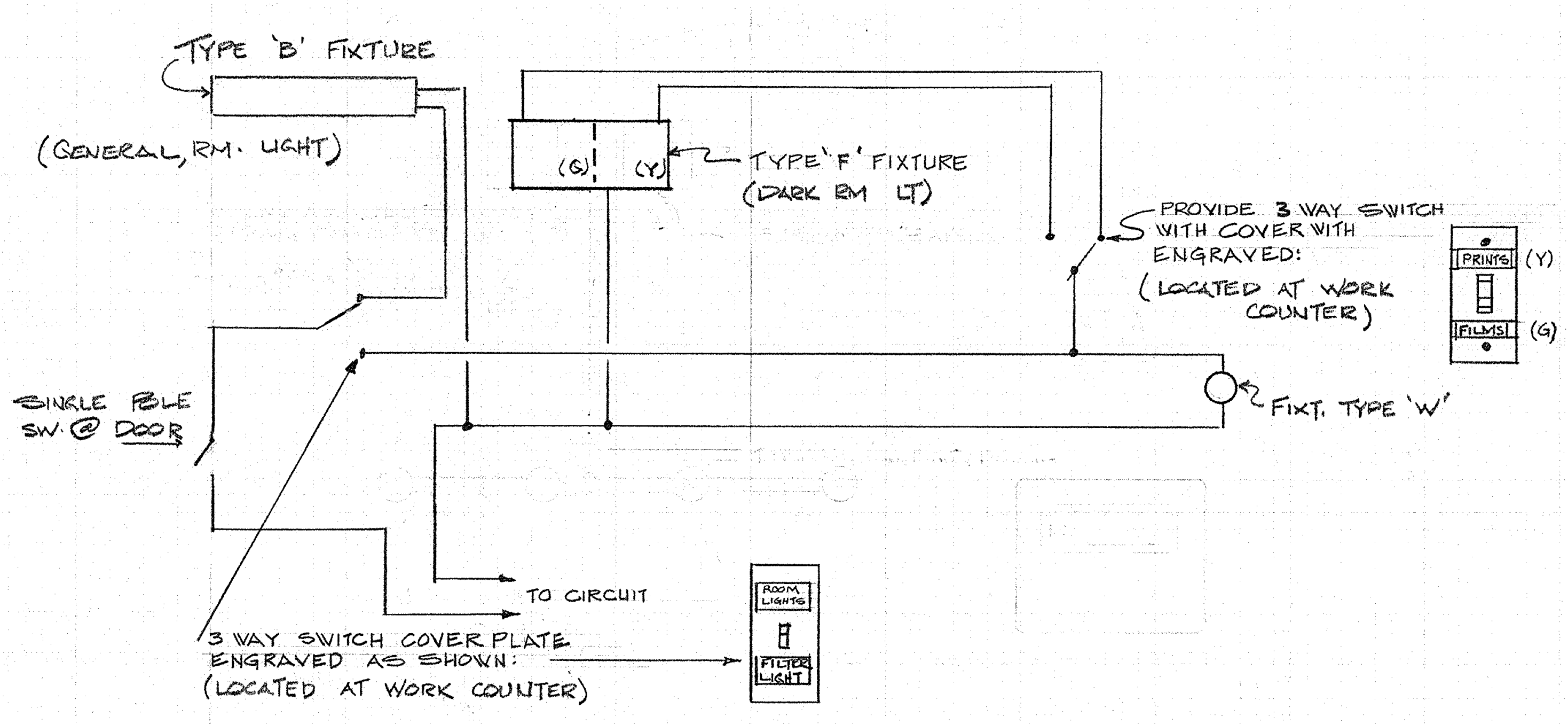
TYPE 'B' FIXTURE
(GENERAL, RM. LIGHT)
(G)
(Y)
TYPE 'F' FIXTURE (DARK RM LT)
PROVIDE 3 WAY SWITCH WITH COVER WITH ENGRAVED:
(LOCATED AT WORK COUNTER)
PRINTS (Y)
FILMS (G)
SINGLE POLE SW. @ DOOR
FIXT. TYPE 'W'
TO CIRCUIT
ROOM LIGHTS
FILTER LIGHT
3 WAY SWITCH COVER PLATE ENGRAVED AS SHOWN:
(LOCATED AT WORK COUNTER)

DARK ROOM SWITCHING DETAIL

2/E2

FIXTURE SUPPORT DETAIL

3/E2

FRED W. MARTINSON, JR. 3926 JAN. 6, 1956
Fred W Martinson
Nov 19, '73

LIGHTING DTLS. & SCHEDULE
SWEET HOME HIGH SCHOOL
ADDITIONS AND ALTERATIONS 1974
DISTRICT 55 LINN COUNTY, OREGON

ARCHITECTS
HAMLIN, MARTIN, SCHULTZ & GEYER
AIA
159 W. 12TH EUGENE, OREGON 97401

E 2
JOB NO.

CLARE K. HAMLIN
Clare K Hamlin
EUGENE, OREGON

A1
A2
A3
A4
A5
A6
A7
A8
A9
A10
A11
A12
A13
A14
A15
A16
A17
A18
A19
A20
A21
A22
A23
A24
A25
A26
A27
E
N
R
P
H
L
3-1
3-2
3-3
3-4
3-5
3-6
3-7
3-8
3-9
(1)
(3)
(4)
SW. IN CRAWL SPACE
PANEL 3
PANEL #27
MECH RM ABOVE
SSG-4

3 LIGHTS IN CRAWL SPACE WITH CIRC. TO LIGHTS IN TUNNEL.

EXIST'G ELEC. PNL (ADD 4-20A 1P BKRS)
CIRCUIT NO. TYPICAL 4.

120V 1φ (2) PROVIDE LOCK-ON DEVICE FOR CIRCUIT TO SSG UNIT. (TYPICAL ALL 'SSG' UNITS ALL SECTORS)

SEE ARCADE LTG DIAG.

ADDITIVE ALT. 'A'

REPLACE STAGE & HOUSE LIGHT & DIMMING CONTROL PANELS. RECONNECT ALL EXISTING CIRCUITS & REPAIR ALL DEFICIENCIES IN EXISTING STAGE LIGHTING EQUIPMENT. SEE SPECIFICATIONS.

SECTOR A LIGHTING PLAN

SCALE 1/8" = 1'-0"

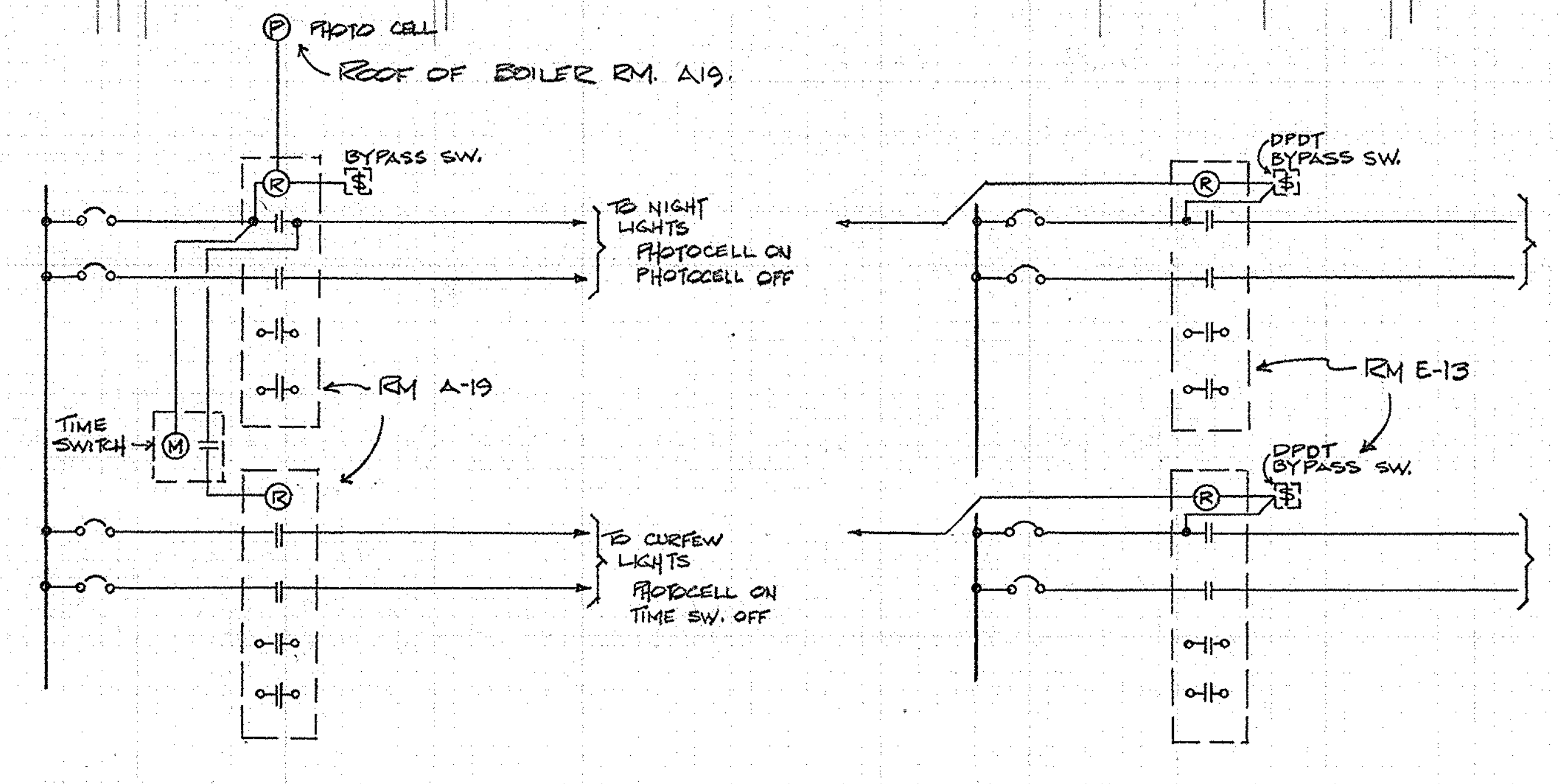
PHOTO CELL
ROOF OF BOILER RM. A19.
BYPASS SW.
TO NIGHT LIGHTS
PHOTOCELL ON
PHOTOCELL OFF
RM A-19
TIME SWITCH
M
R
TO CURFEW LIGHTS
PHOTOCELL ON
TIME SW. OFF
DPDT BYPASS SW.
RM E-13
DPDT BYPASS SW.

ARCADE LIGHT CONTROL DIAGRAM

NOT TO SCALE

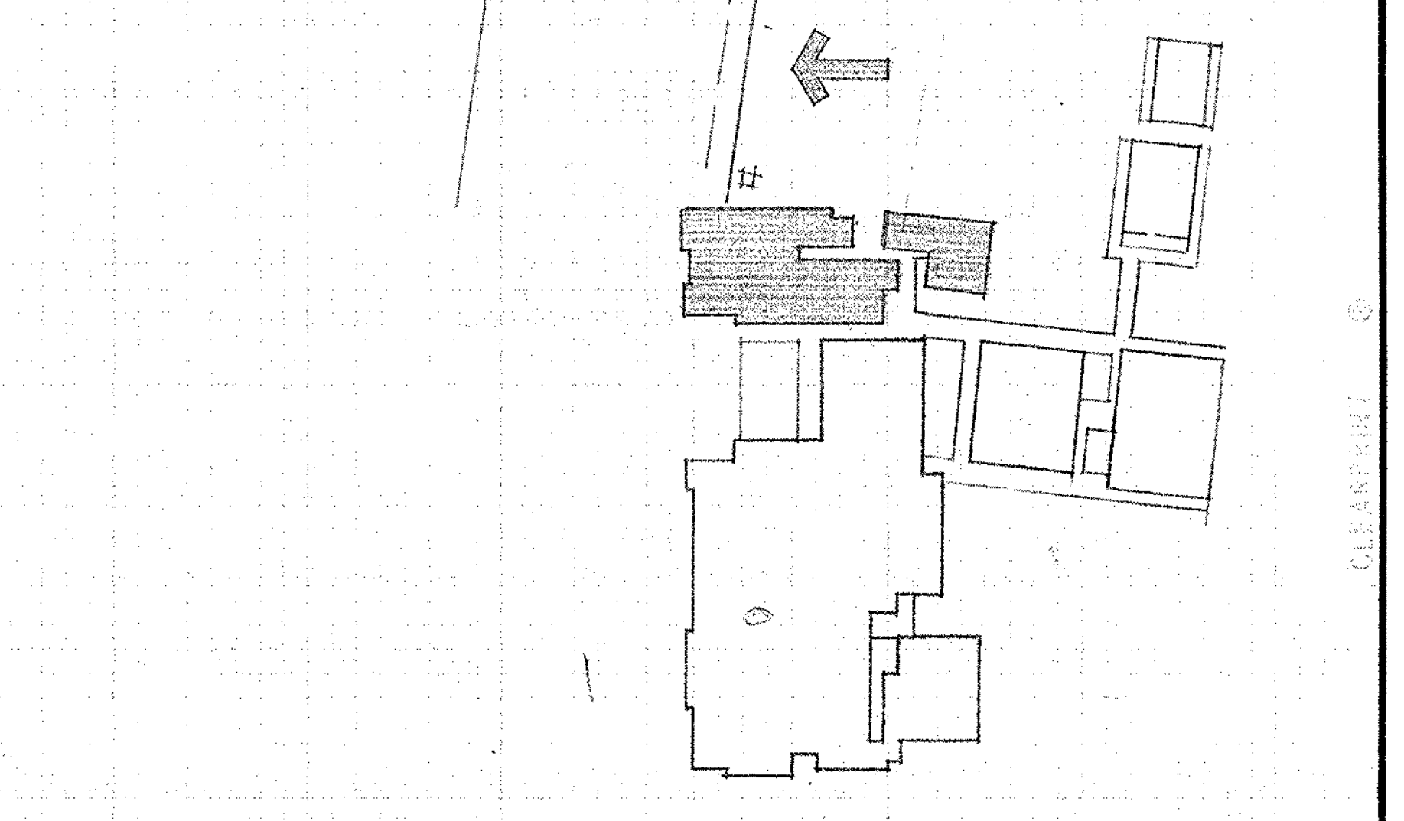

FRED W. MARTINSON, JR.
3926
JAN. 6, 1956
Fred W. Martinson
Nov. 19, '73

LIGHTING - SECTOR A

SWEET HOME HIGH SCHOOL
ADDITIONS AND ALTERATIONS 1974
DISTRICT 55 LINN COUNTY, OREGON

ARCHITECTS
HAMLIN, MARTIN, SCHULTZ & GEYER
AIA
159 W. 12TH EUGENE, OREGON 97401

E
3
JOB NO.

CLARE K. HAMLIN
Clare K Hamlin
EUGENE, OREGON

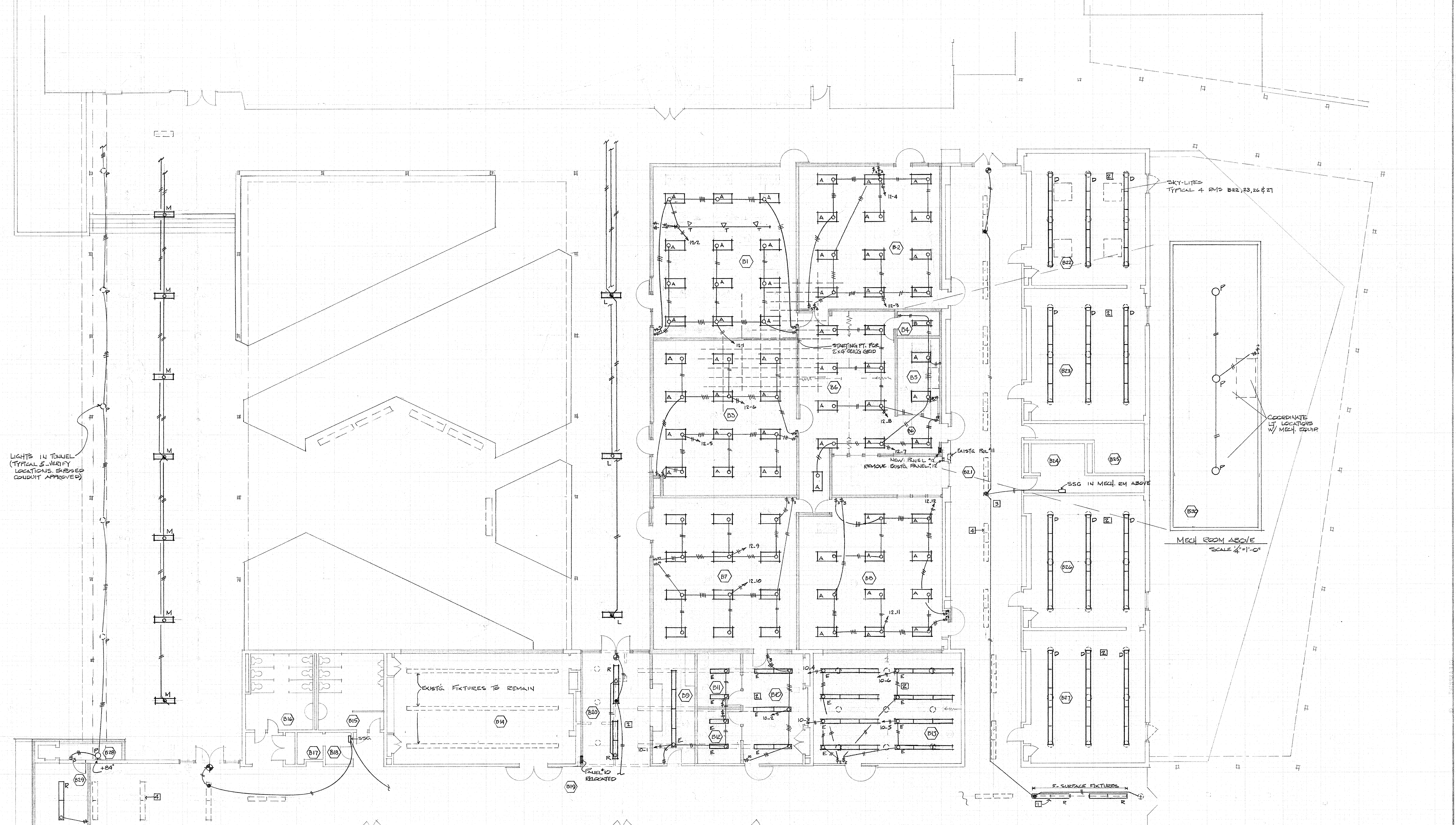
LIGHTS IN TUNNEL (TYPICAL 5_VERIFY LOCATIONS. EXPOSED CONDUIT APPROVED)
M
L
B1
B-2
B3
B4
B5
B6
B7
B8
B9
B10
B11
B12
B13
B14
B15
B16
B17
B18
B19
B20
B21
B22
B23
B24
B25
B26
B27
B28
B29
B30
STARTING PT. FOR 2'x4' CEIL'G GRID
EXISTG PNL #11
NEW PANEL #12
REMOVE EXISTG PANEL #12
SSG IN MECH. RM ABOVE
SKY-LITES TYPICAL 4 RMS B22, 23, 26 & 27
COORDINATE LT. LOCATIONS W/ MECH. EQUIP.
MECH ROOM ABOVE
SCALE 1/16"=1'-0"
EXISTG. FIXTURES TO REMAIN
PANEL 10 RELOCATED
SSG
+84"
5 - SURFACE FIXTURES
12-1
12-2
12-3
12-4
12-5
12-6
12-7
12-8
12-9
12-10
12-11
12-12
10-1
10-2
10-3
10-4
10-5
10-6

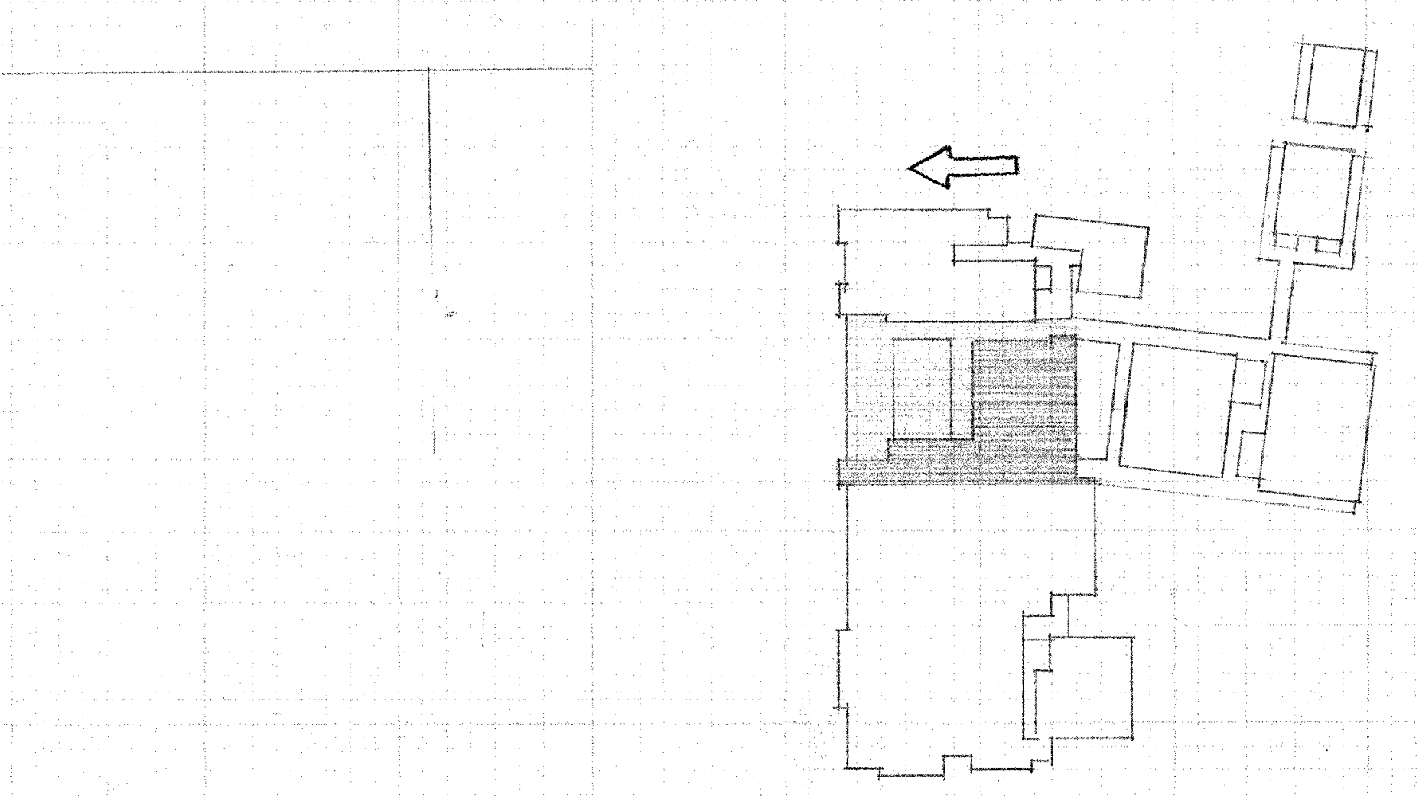

NOTES

1. REPLACE 5 SURFACE MOUNTED FIXTURES WITH 2-8 FT 2 TUBE FIXTURES SALVAGED FROM SECTOR 'B'

2. REMOVE EXISTING FIXTURES, CONTRACTOR TO DISPOSE OF SAME. INSTALL NEW FIXTURES AS INDICATED. UTILIZE EXISTING CIRCUITS PROVIDING NEW SWITCHES.

3. MODIFY EXISTING CORRIDOR LIGHTING CIRCUITS AS INICATED FOR NIGHT AND EMERGENCY LIGHTS. (TYPICAL FOR SECTORS A, B, C & D.) PROVIDE LOCK-ON DEVICE FOR SUPPLY CIRCUIT_ ALL LOCATIONS.

4. DROP EXISTING CORRIDOR FIXTURES WHILE NEW CEILING BEING INSTALLED, EXTEND BOXES & STEMS AS NECESSARY. CLEAN FIXTURES, PROVIDE NEW LAMPS AND RE-INSTALL. (TYPICAL ALL CORRIDORS EXCEPT AS NOTED.)

LIGHTING PLAN SECTOR B

SCALE 1/8"=1'-0"

Fred W. Martinson
3926
FRED W. MARTINSON, JR.
JAN. 6, 1956
Nov 19, '73

LIGHTING - SECTOR B
SWEET HOME HIGH SCHOOL
ADDITIONS AND ALTERATIONS 1974
DISTRICT 55 LINN COUNTY, OREGON

ARCHITECTS
HAMLIN, MARTIN,
SCHULTZ & GEYER
AIA
159 W. 12TH EUGENE, OREGON 97401

E
4
JOB NO.

CLARE K. HAMLIN
Clare K Hamlin
EUGENE, OREGON

RELACE (E) PANEL 13
SKYLIGHTS BEING DELETED, FIXTURES TO BE EVENLY SPACED. SIMILAR TO CORRIDOR B21
MECH RM IN ATTIC SPACE
SEE SHT E12
REPLACE EXISTG PNL #15
REPLACE EXISTG PANEL #14
REPLACE (E) PNLS 16 & 17
EXTEND (E) CORRIDOR LT. CIRCUIT.
NEW PNL CB
P.E. GYM.
(E) ELEC. SERVICE PNL #1
C1
C27
C31
C32
C92
C93
C94
C95

LIGHTING PLAN SECTOR C

SCALE 1/8" = 1'-0"

NOTES

1. REPLACE SURFACE MOUNTED FIXTURES WITH 8 FT 2 TUBE FIXTURES SALVAGED FROM SECTOR 'B'. STEM LENGTH TO MATCH EXISTG FIXTURES THIS AREA.
2. EXISTING FIXTURES TO BE RELOCATED OR REHUNG AS SHOWN. AREA TO GET NEW SUSPENDED CEILING.
3. UTILIZE EXISTING CIRCUITS THIS AREA
4. PROVIDE ENGRAVED NAME PLATE "LOCKER RM. LIGHTS" - 2 GANG BOX PLATE
5. MODIFY EXISTING CIRCUITS AS INDICATED
6. RELOCATE/ESTABLISH LT. SW. CONTROL PT. AT NEW DOOR LOCATION. (MODIFY Ⓔ CIRCUITS AS REQUIRED.)
7. DROP Ⓔ CORRIDOR FIXTURES WHILE NEW CEILING BEING INSTALLED, EXTEND BOXES & STEMS AS NECESSARY. CLEAN FIXTURES, PROVIDE NEW LAMPS & REINSTALL.

REGISTERED PROFESSIONAL ENGINEER 3926 OREGON JAN. 6, 1958 FRED W. MARTINSON, JR.
Fred W. Martinson
Nov. 19, '73

LIGHTING - SECTOR C
SWEET HOME HIGH SCHOOL
ADDITIONS AND ALTERATIONS 1974
DISTRICT 55 LINN COUNTY, OREGON

ARCHITECTS AIA
HAMLIN, MARTIN, SCHULTZ & GEYER
159 W. 12TH EUGENE, OREGON 97401

E 5
JOB NO.

REGISTERED ARCHITECT CLARE K. HAMLIN EUGENE, OREGON STATE OF OREGON
Clare K Hamlin

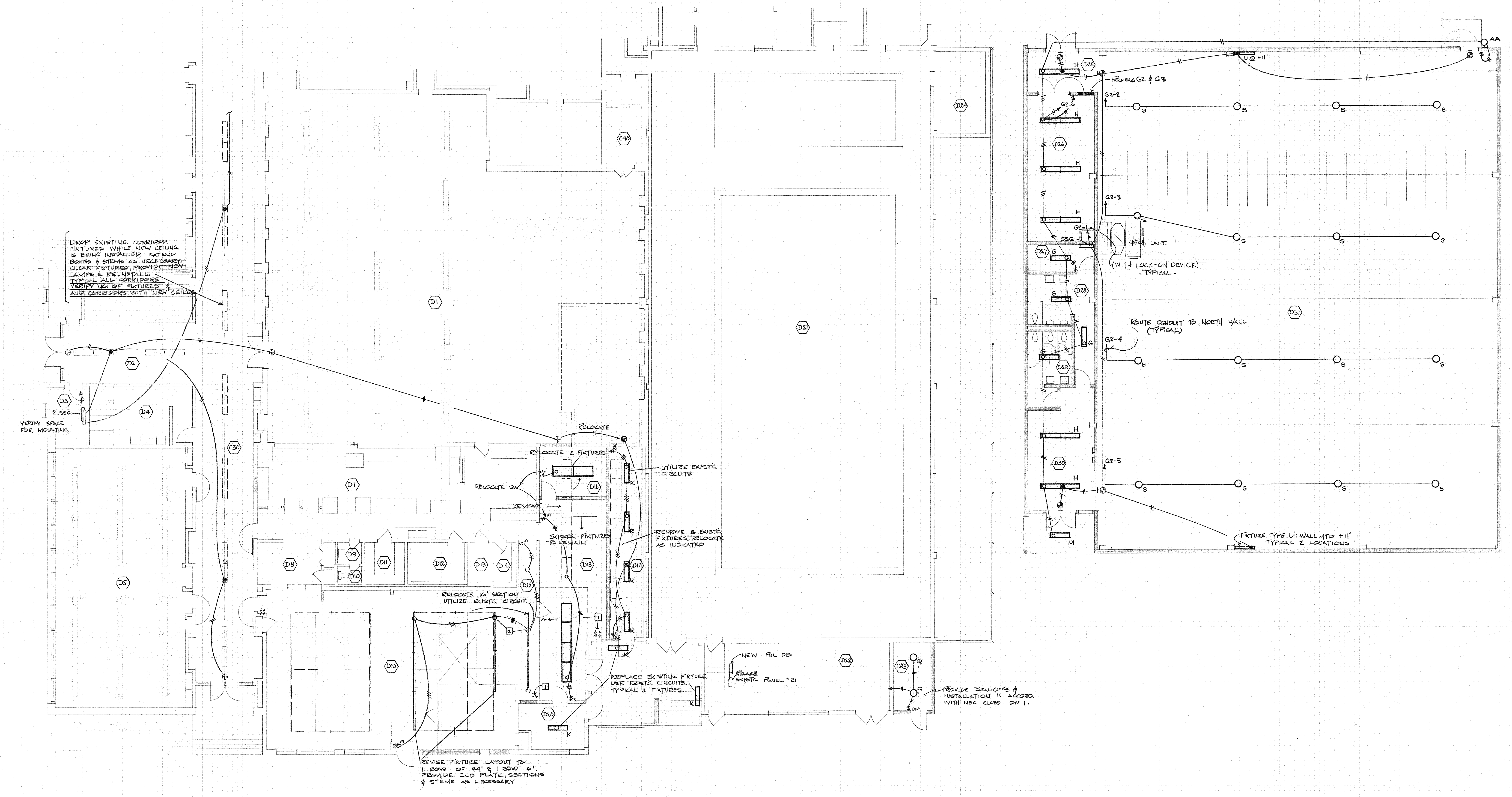
DROP EXISTING CORRIDOR FIXTURES WHILE NEW CEILING IS BEING INSTALLED. EXTEND BOXES & STEMS AS NECESSARY. CLEAN FIXTURES, PROVIDE NEW LAMPS & RE-INSTALL.
TYPICAL ALL CORRIDORS
VERIFY NO. OF FIXTURES & AND CORRIDORS WITH NEW CEILGS
2-SSG
VERIFY SPACE FOR MOUNTING.
D1
D2
D3
D4
D5
C30
C40
D7
D8
D9
D10
D11
D12
D13
D14
D15
D16
D17
D18
D19
D20
D21
D22
D23
D24
RELOCATE
RELOCATE 2 FIXTURES
RELOCATE SW
REMOVE
UTILIZE EXISTG CIRCUITS
EXISTG FIXTURES TO REMAIN
REMOVE 8 EXISTG FIXTURES, RELOCATE AS INDICATED
RELOCATE 16' SECTION UTILIZE EXISTG CIRCUIT.
REPLACE EXISTING FIXTURE. USE EXISTG CIRCUITS. TYPICAL 3 FIXTURES.
REVISE FIXTURE LAYOUT TO 1 ROW OF 24' & 1 ROW 16'. PROVIDE END PLATE, SECTIONS & STEMS AS NECESSARY.
NEW PNL DB
REPLACE EXISTG PANEL #21
PROVIDE SEAL-OFFS & INSTALLATION IN ACCORD. WITH NEC CLASS 1 DIV 1.
$EXP
Q
R
K
AA
U @ +11'
PANELS G2 & G3
G2-2
G2-6
G2-3
G2-1
SSG
MECH. UNIT.
(WITH LOCK-ON DEVICE) -TYPICAL-
G2-4
G2-5
ROUTE CONDUIT TO NORTH WALL (TYPICAL)
FIXTURE TYPE U: WALL MTD +11' TYPICAL 2 LOCATIONS
D25
D26
D27
D28
D29
D30
D31
H
G
M
S

LIGHTING PLAN SECTOR D

SCALE 1/8" = 1'-0"

NOTE:

1. REMOVE SWITCH, PROVIDE BLANK COVER PLATE
2. USE EXISTING CIRCUITS, RE-ARRANGE SWITCHING AS SHOWN.

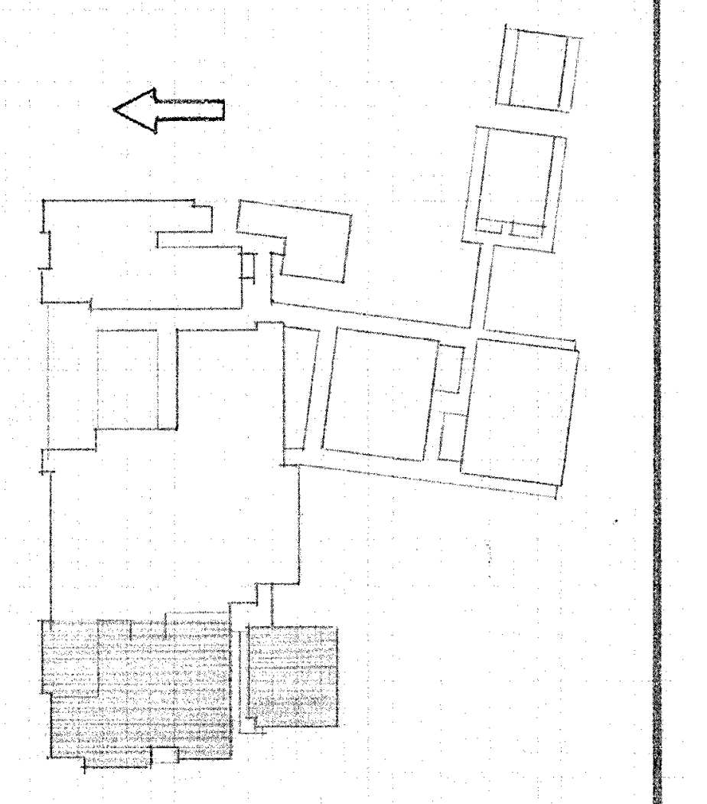

REGISTERED PROFESSIONAL ENGINEER 3926 OREGON JAN. 6, 1956 FRED W. MARTINSON, JR.

Fred W. Martinson

NOV. 19, '73

LIGHTING - SECTOR D

SWEET HOME HIGH SCHOOL
ADDITIONS AND ALTERATIONS 1974
DISTRICT 55 LINN COUNTY, OREGON

ARCHITECTS
HAMLIN, MARTIN,
SCHULTZ & GEYER
AIA
159 W. 12TH EUGENE, OREGON 97401

E
6
JOB NO.

CLARE K. HAMLIN
Clare K Hamlin
EUGENE, OREGON

EXTEND CIRCUITS UNDER ALT ONLY (SEE SHT E-1)
SECTOR 'A'
FIXTURES TYPE A THIS RM.
FIXTURES TYPE A THIS RM (EXCEPT AS NOTED)
FIXTURES TYPE A THIS AREA (UNLESS NOTED)
START'G PT. FOR 2'x4' CEIL'G GRID
1-4 FIXTURES SWITCHED SEPARATELY
TWO LTG. RELAYS
RLS A & C
RLS A1, C1 & D1
RL D
SSG
TO LT CIRC. IN JAN. CLOSET BELOW
TO LT. CIRCUIT IN JAN. CLOSET BELOW
MECH ROOM ABOVE
SCALE 1/4"=1'-0"
E1
E2
E3
E4
E5
E6
E7
E8
E9
E10
E12
E13
E14
E15
E16
E17
E18
E20
E21
E22
E24
E25
E26
E27
E28
E29
E30
E31
E32
E33
E34
E35
E36
E37
E38
E39
E40
E41
E42
E43
E44
E45
E46
E47
E48
E49

LIGHTING PLAN SECTOR E

SCALE 1/8" = 1'-0"

NOTE: ALL ARCADE LTS TYPE 'L' THIS SECTOR.

REGISTERED PROFESSIONAL ENGINEER 3926 OREGON JAN. 6, 1956 FRED W. MARTINSON, JR.

Fred W. Martinson

NOV. 19 '73

LIGHTING - SECTOR E

SWEET HOME HIGH SCHOOL
ADDITIONS AND ALTERATIONS 1974
DISTRICT 55 LINN COUNTY, OREGON

ARCHITECTS
HAMLIN, MARTIN,
SCHULTZ & GEYER
AIA
159 W. 12TH EUGENE, OREGON 97401

E
7
JOB NO.

REGISTERED ARCHITECT STATE OF OREGON CLARE K. HAMLIN EUGENE, OREGON

Clare K Hamlin

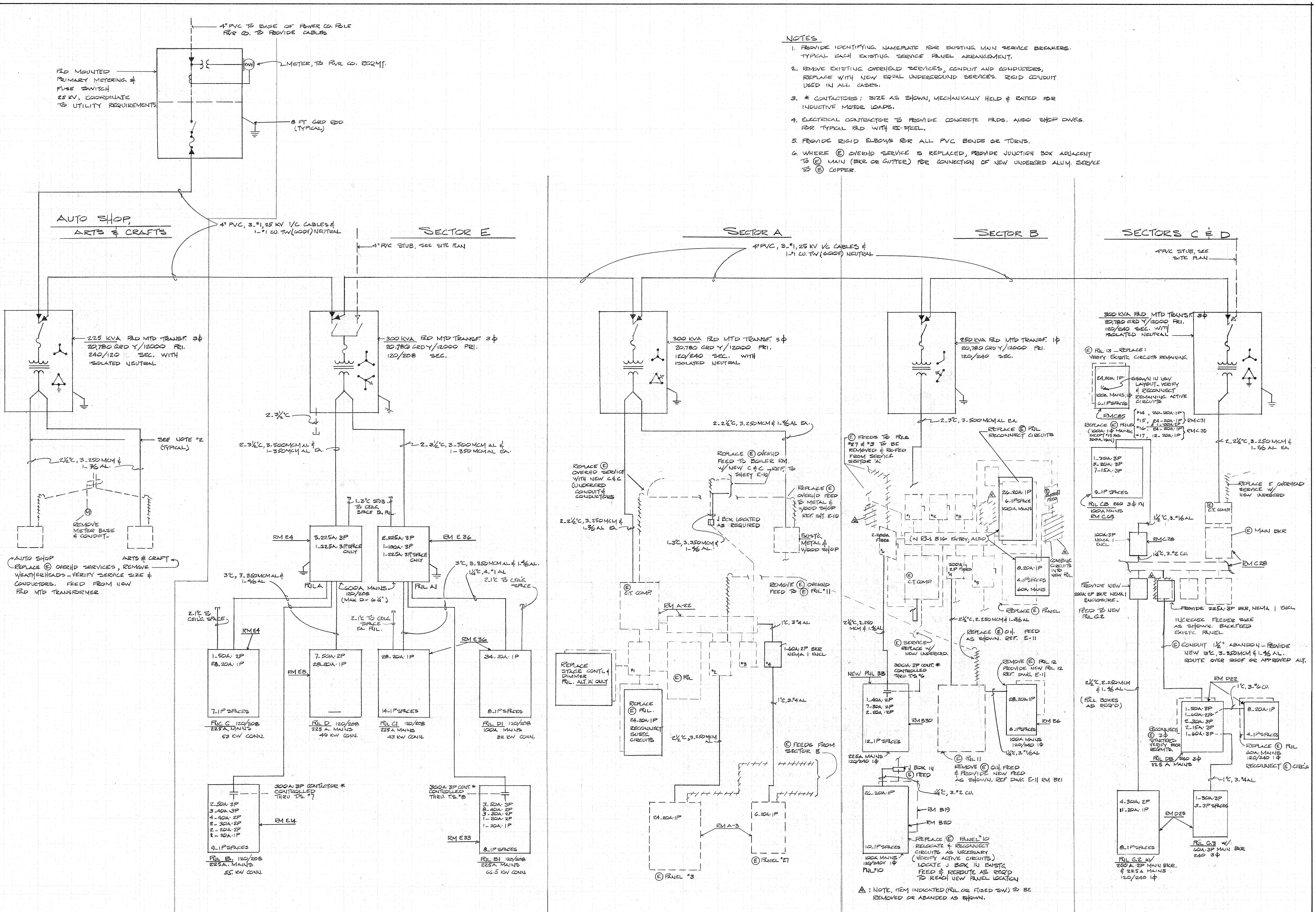
4" PVC TO BASE OF POWER CO. POLE
PWR CO. TO PROVIDE CABLES
PAD MOUNTED PRIMARY METERING & FUSE SWITCH 25 KV, COORDINATE TO UTILITY REQUIREMENTS
KWH
METER, TO PWR CO. REQMT.
8 FT GRD ROD (TYPICAL)
AUTO SHOP, ARTS & CRAFTS
4" PVC, 3-#1, 25 KV 1/C CABLES & 1-#1 CU. TW (600V) NEUTRAL
SECTOR E
4" PVC STUB, SEE SITE PLAN
225 KVA PAD MTD TRANSF. 3Φ 20,780 GRD Y/12000 PRI. 240/120 SEC. WITH ISOLATED NEUTRAL
SEE NOTE #2 (TYPICAL)
2½"C, 3-250 MCM & 1-3/0 AL.
M
REMOVE METER BASE & CONDUIT
AUTO SHOP
ARTS & CRAFT
REPLACE Ⓔ OVERHD SERVICES, REMOVE WEATHERHEADS - VERIFY SERVICE SIZE & CONDUCTORS. FEED FROM NEW PAD MTD TRANSFORMER
300 KVA PAD MTD TRANSF. 3Φ 20,780 GRD Y/12000 PRI. 120/208 SEC.
2-3½"C
2-3½"C, 3-500MCM AL & 1-350MCM AL EA.
2-3½"C, 3-500MCM AL & 1-350 MCM AL EA.
1-3"C STUB TO CEILG SPACE EA PNL.
RM E4
3-225A 3P
1-225A 3P SPACE ONLY
2-225A 3P
1-100A 3P
1-225A 3P SPACE ONLY
RM E36
PNL A
600A MAINS 120/208 (MAX D = 6¼")
PNL A1
3"C, 3-350MCM AL & 1-4/0 AL
3"C, 3-350MCM AL & 1-4/0 AL.
1¼"C, 4-#1 AL
2-1"C TO CEILG SPACE
2-1"C TO CEILG SPACE
2-1"C TO CEILG SPACE EA PNL.
RM E4
RM E36
1-50A 2P
28-20A 1P
7-1P SPACES
PNL C 120/208 225A MAINS 53 KW CONN.
RM E8
7-50A 2P
28-20A 1P
PNL D 120/208 225 A MAINS 49 KW CONN.
28-20A 1P
14-1P SPACES
PNL C1 120/208 225A MAINS 43 KW CONN.
34-20A 1P
8-1P SPACES
PNL D1 120/208 100A MAINS 32 KW CONN.
300A 3P CONTACTOR * CONTROLLED THRU T.S. #7
2-50A 3P
3-40A 3P
4-40A 2P
2-30A 2P
2-20A 2P
2-20A 1P
9-1P SPACES
RM E14
PNL B 120/208 225A MAINS 55 KW CONN.
300A 3P CONT. * CONTROLLED THRU T.S. #8
3-50A 3P
8-40A 2P
3-30A 2P
1-20A 2P
1-20A 1P
8-1P SPACES
RM E33
PNL B1 120/208 225A MAINS 66.5 KW CONN.
SECTOR A
4" PVC, 3-#1, 25 KV 1/C CABLES & 1-#1 CU. TW (600V) NEUTRAL
300 KVA PAD MTD TRANSF. 3Φ 20,780 GRD Y/12000 PRI. 120/240 SEC. WITH ISOLATED NEUTRAL
2-2½"C, 3-250MCM & 1-3/0 AL EA.
REPLACE Ⓔ OVERHD FEED TO BOILER RM. W/ NEW C&C - REF. TO SHEET E-10
REPLACE Ⓔ OVERHD SERVICE WITH NEW C&C (UNDERGRD CONDUIT & CONDUCTORS
REPLACE Ⓔ OVERHD FEED TO METAL & WOOD SHOP REF. SHT E-10
2-2½"C, 3-250MCM & 1-3/0 AL EA.
J BOX LOCATED AS REQUIRED
1-3"C, 3-350MCM & 1-4/0 AL.
EXIST'G METAL & WOOD SHOP
Ⓔ C.T. COMP.
REMOVE Ⓔ OVERHD FEED TO Ⓔ PNL #11
RM A-22
1"C, 3-#4 AL
1-60A 2P BKR NEMA 1 ENCL.
#1
Ⓔ PNL
#2
#3
#4
REPLACE STAGE CONT'L & DIMMER PNL. ALT. 'A' ONLY
REPLACE Ⓔ PNL. 24-20A 1P RECONNECT EXIST'G CIRCUITS
1"C, 3-#4 AL
2½"C, 3-250MCM AL.
Ⓔ FEEDS FROM SECTOR B
24-20A 1P
RM A-3
6-20A 1P
Ⓔ PANEL #3
Ⓔ PANEL #27
SECTOR B
250 KVA PAD MTD TRANSF. 1Φ 20,780 GRD Y/12000 PRI. 120/240 SEC.
2-3"C, 3-500 MCM AL EA.
REPLACE Ⓔ PNL RECONNECT CIRCUITS
Ⓔ FEEDS TO PNLS #27 & #3 TO BE REMOVED & RE-FED FROM SERVICE SECTOR 'A'
#1
#2
#3
26-20A 1P
6-1P SPACE
100A MAINS
Ⓔ EMERG FEED
2-200A FUSES
#6
(IN RM. B16 ENTRY, ALSO)
Ⓔ C.T. COMP.
200A 2P FUSES
#4
#5
8-20A 1P
4-1P SPACES
60A MAINS
COMBINE CIRCUITS INTO NEW PNL.
REPLACE Ⓔ PANEL
2½"C, 2-250MCM & 1-3/0 AL
2½"C, 2-250 MCM & 1-3/0 AL
Ⓔ SERVICE - REPLACE W/ NEW UNDERGRD.
REPLACE Ⓔ O.H. FEED AS SHOWN. REF. E-11
300A 2P CONT. * CONTROLLED THRU. T.S #6
NEW PNL BB
1-40A 2P
7-30A 2P
2-20A 2P
12-1P SPACES
RM B30
225A MAINS 120/240 1Φ
REMOVE Ⓔ PNL 12 PROVIDE NEW PNL 12 REF. DWG. E-11
28-20A 1P
8-1P SPACES
RM B6
100A MAINS 120/240 1Φ
1¼"C, 3-#1/0 AL
Ⓔ PNL 11
REMOVE Ⓔ O.H. FEED & PROVIDE NEW FEED AS SHOWN. REF DWG E-11 RM B21
J BOX IN Ⓔ FEED
1¼"C, 3-#2 CU.
26-20A 1P
RM B19
RM B20
10-1P SPACES
100A MAINS 120/240V 1Φ PNL #10
REPLACE Ⓔ PANEL #10 RELOCATE & RECONNECT CIRCUITS AS NECESSARY (VERIFY ACTIVE CIRCUITS) LOCATE J BOX IN EXIST'G FEED & REROUTE AS REQ'D TO REACH NEW PANEL LOCATION
SECTORS C & D
4" PVC STUB, SEE SITE PLAN
300 KVA PAD MTD TRANSF. 3Φ 20,780 GRD Y/12000 PRI. 120/240 SEC. WITH ISOLATED NEUTRAL
Ⓔ PNL 13 - REPLACE: VERIFY EXIST'G CIRCUITS REMAINING
24-20A 1P
16
100A MAINS, 1Φ
6-1P SPACES
SHOWN IN NEW LAYOUT - VERIFY & RECONNECT REMAINING ACTIVE CIRCUITS
RM C85
REPLACE Ⓔ PNLS (100A 1Φ MAINS; EXCEPT #15 HAS 200A MAIN)
#14, 20-20A 1P
#15, 24-20A 1P & 1-100A 2P
#16, 24-20A 1P
#17, 12-20A 1P
RM C31
RM C30
2-2½"C, 3-250 MCM & 1-2/0 AL EA.
1-30A 3P
3-20A 3P
7-15A 3P
9-1P SPACES
PNL CB 240 3Φ FN 100A MAINS RM C63
REPLACE E OVERHEAD SERVICE W/ NEW UNDERGRD
Ⓔ C.T. COMP.
1½"C, 3-#1/0 AL
100A 3P NEMA 1 ENCL.
RM C28
Ⓔ MAIN BKR
1¼"C, 3-#2 CU.
RM C28
PROVIDE NEW 200A 2P BKR NEMA 1 ENCLOSURE. FEED TO NEW PNL G2
PROVIDE 225A 3P BKR, NEMA 1 ENCL.
INCREASE FEEDER SIZE AS SHOWN. BACKFEED EXIST'G PANEL
Ⓔ CONDUIT 1½" ABANDON - PROVIDE NEW 3"C, 3-350MCM & 1-4/0 AL. ROUTE OVER ROOF OR APPROVED ALT.
2½"C, 2-250MCM & 1-4/0 AL
(PULL BOXES AS REQ'D)
RM D22
1"C, 3-#6 CU.
1-50A 3P
1-60A 2P
2-30A 3P
2-15A 3P
1-60A 3P
RECONNECT Ⓔ 3Φ STARTERS VERIFY BKR REQMTS.
PNL DB 240 3Φ 225 A MAINS
8-20A 1P
4-1P SPACES
REPLACE Ⓔ PNL 60A MAINS 120/240 1Φ RECONNECT Ⓔ CIRC'S
1"C, 3-#4 AL
4-30A 2P
11-20A 1P
8-1P SPACES
RM D25
1-30A 3P
3-3P SPACES
PNL G2 W/ 200 A 2P MAIN BKR. & 225A MAINS 120/240 1Φ
PNL G3 W/ 60A 3P MAIN BKR 240 3Φ

NOTES

1. PROVIDE IDENTIFYING NAMEPLATE FOR EXISTING MAIN SERVICE BREAKERS. TYPICAL EACH EXISTING SERVICE PANEL ARRANGEMENT.
2. REMOVE EXISTING OVERHEAD SERVICES, CONDUIT AND CONDUCTORS, REPLACE WITH NEW EQUAL UNDERGROUND SERVICES. RIGID CONDUIT USED IN ALL CASES.
3. * CONTACTORS; SIZE AS SHOWN, MECHANICALLY HELD & RATED FOR INDUCTIVE MOTOR LOADS.
4. ELECTRICAL CONTRACTOR TO PROVIDE CONCRETE PADS. ALSO SHOP DWGS. FOR TYPICAL PAD WITH RE-STEEL.
5. PROVIDE RIGID ELBOWS FOR ALL PVC BENDS OR TURNS.
6. WHERE Ⓔ OVERHD SERVICE IS REPLACED, PROVIDE JUNCTION BOX ADJACENT TO Ⓔ MAIN (BKR OR GUTTER) FOR CONNECTION OF NEW UNDERGRD ALUM. SERVICE TO Ⓔ COPPER.

Ⓡ : NOTE, ITEM INDICATED (PNL. OR FUSED SW.) TO BE REMOVED OR ABANDED AS SHOWN.

RISER DIAGRAM

NO SCALE

FRED W. MARTINSON, JR.
3926
JAN. 6, 1956
Fred W. Martinson
Nov, 19 '73

RISER DIAGRAM
SWEET HOME HIGH SCHOOL
ADDITIONS AND ALTERATIONS 1974
DISTRICT 55 LINN COUNTY OREGON

ARCHITECTS
HAMLIN, MARTIN, SCHULTZ & GEYER
AIA
159 W. 12TH EUGENE, OREGON 97401

E
8
JOB NO.

CLARE K. HAMLIN
Clare K Hamlin
EUGENE, OREGON

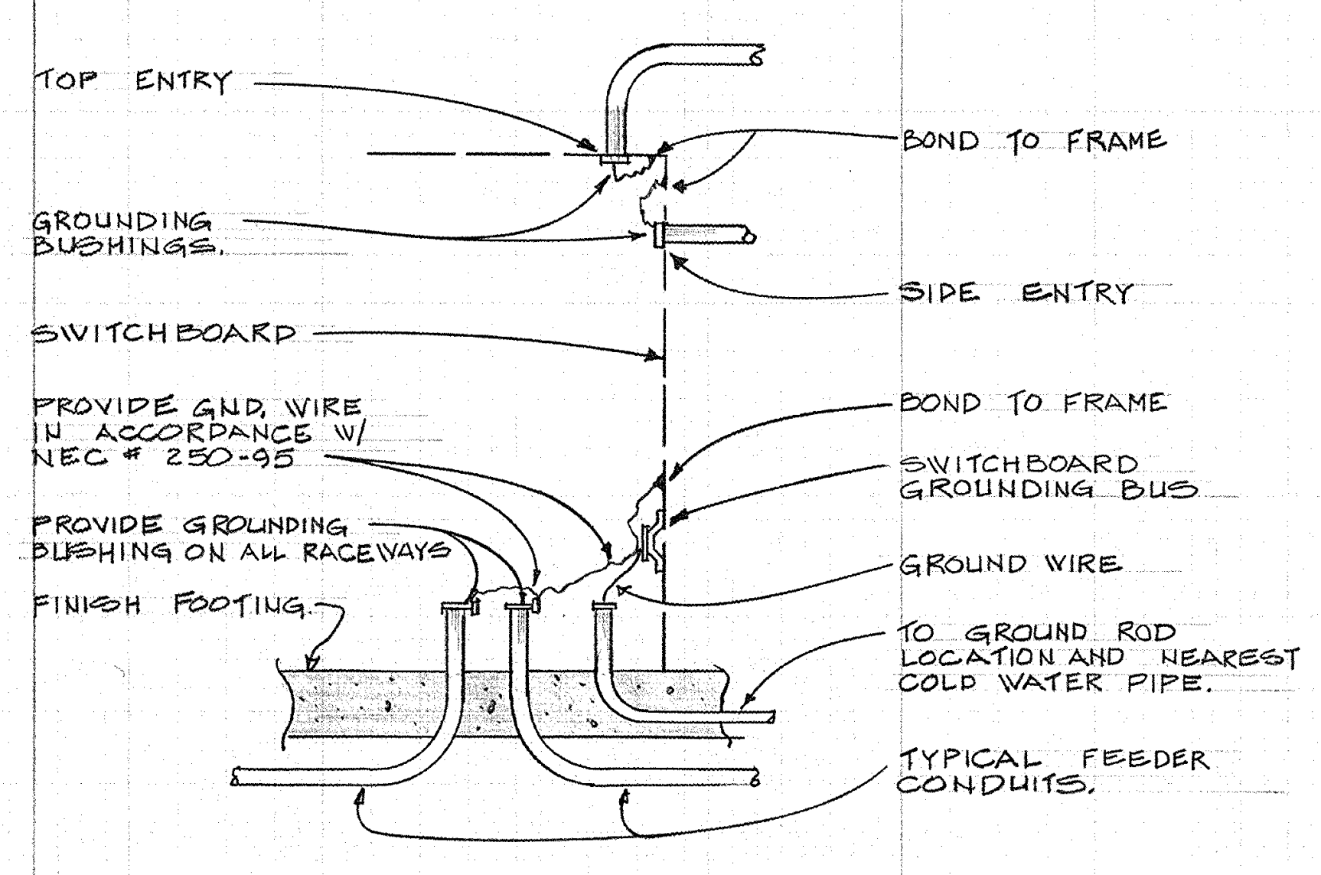
TOP ENTRY
GROUNDING BUSHINGS.
SWITCHBOARD
PROVIDE GND. WIRE IN ACCORDANCE W/ NEC # 250-95
PROVIDE GROUNDING BUSHING ON ALL RACEWAYS
FINISH FOOTING
BOND TO FRAME
SIDE ENTRY
BOND TO FRAME
SWITCHBOARD GROUNDING BUS
GROUND WIRE
TO GROUND ROD LOCATION AND NEAREST COLD WATER PIPE.
TYPICAL FEEDER CONDUITS.

GROUNDING AT MAIN PANEL (1/E9)

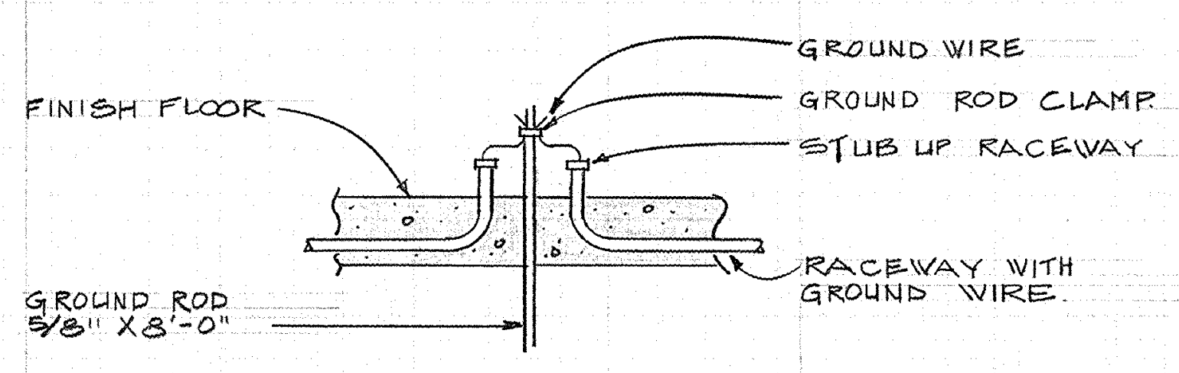
FINISH FLOOR
GROUND ROD 5/8" X 8'-0"
GROUND WIRE
GROUND ROD CLAMP
STUB UP RACEWAY
RACEWAY WITH GROUND WIRE.

GROUND ROD CONNECTION (2/E9)
NO SCALE

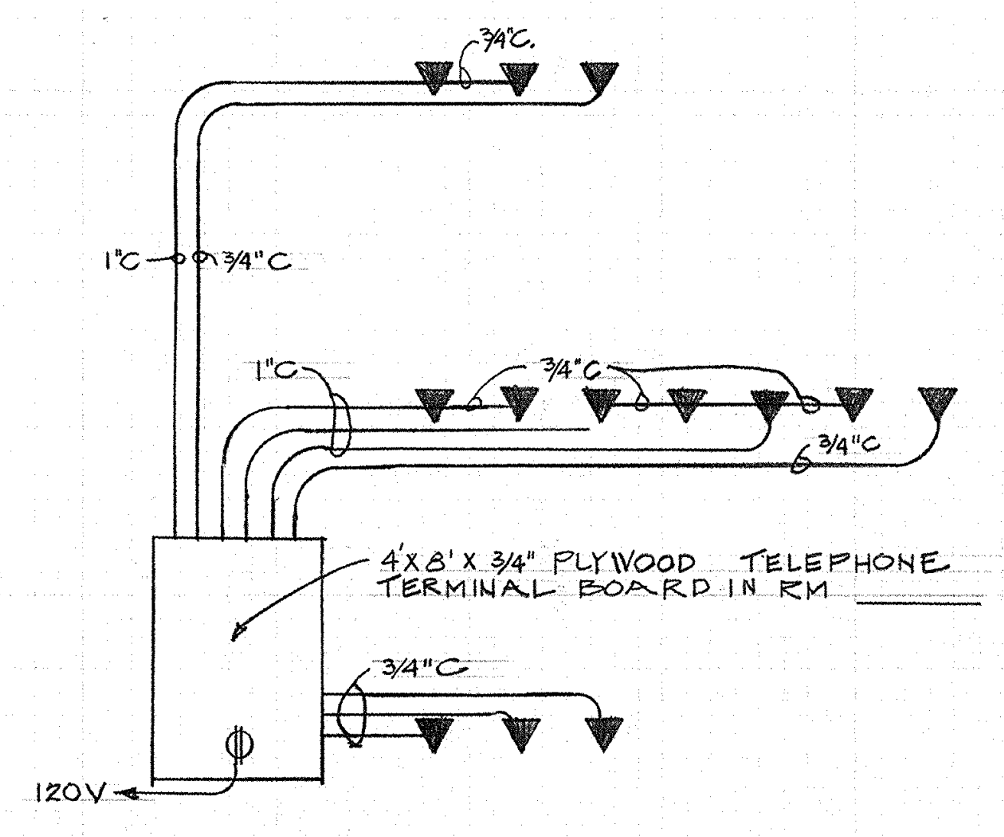
3/4"C.
1"C
3/4"C
1"C
3/4"C
3/4"C
4'X8'X3/4" PLYWOOD TELEPHONE TERMINAL BOARD IN RM
3/4"C
120V

TELEPHONE RISER (3/E9)
NO SCALE

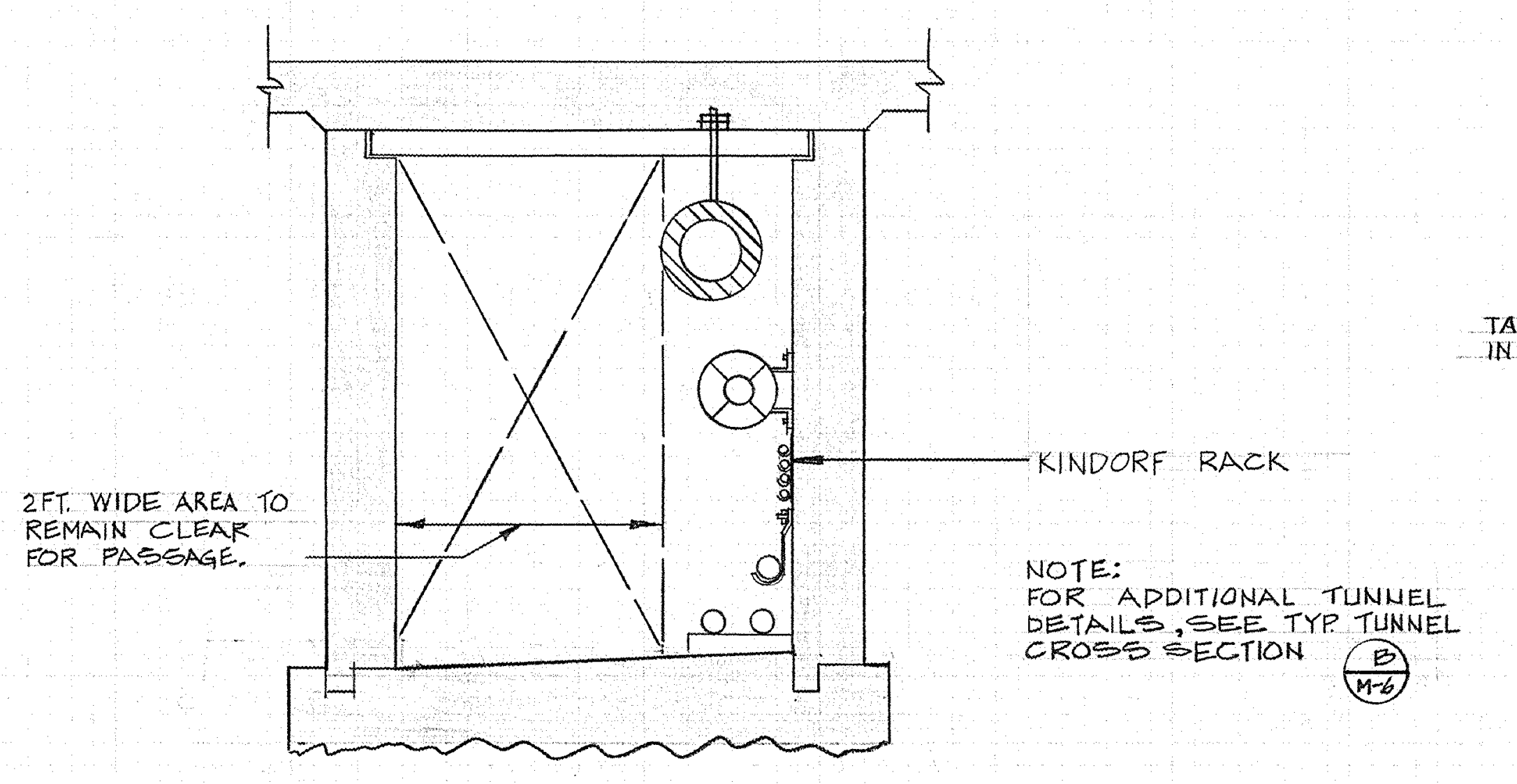
2FT. WIDE AREA TO REMAIN CLEAR FOR PASSAGE.
KINDORF RACK

NOTE:
FOR ADDITIONAL TUNNEL DETAILS, SEE TYP. TUNNEL CROSS SECTION (B/M-6)

TYPICAL TUNNEL CROSS SECTION (4/E9)

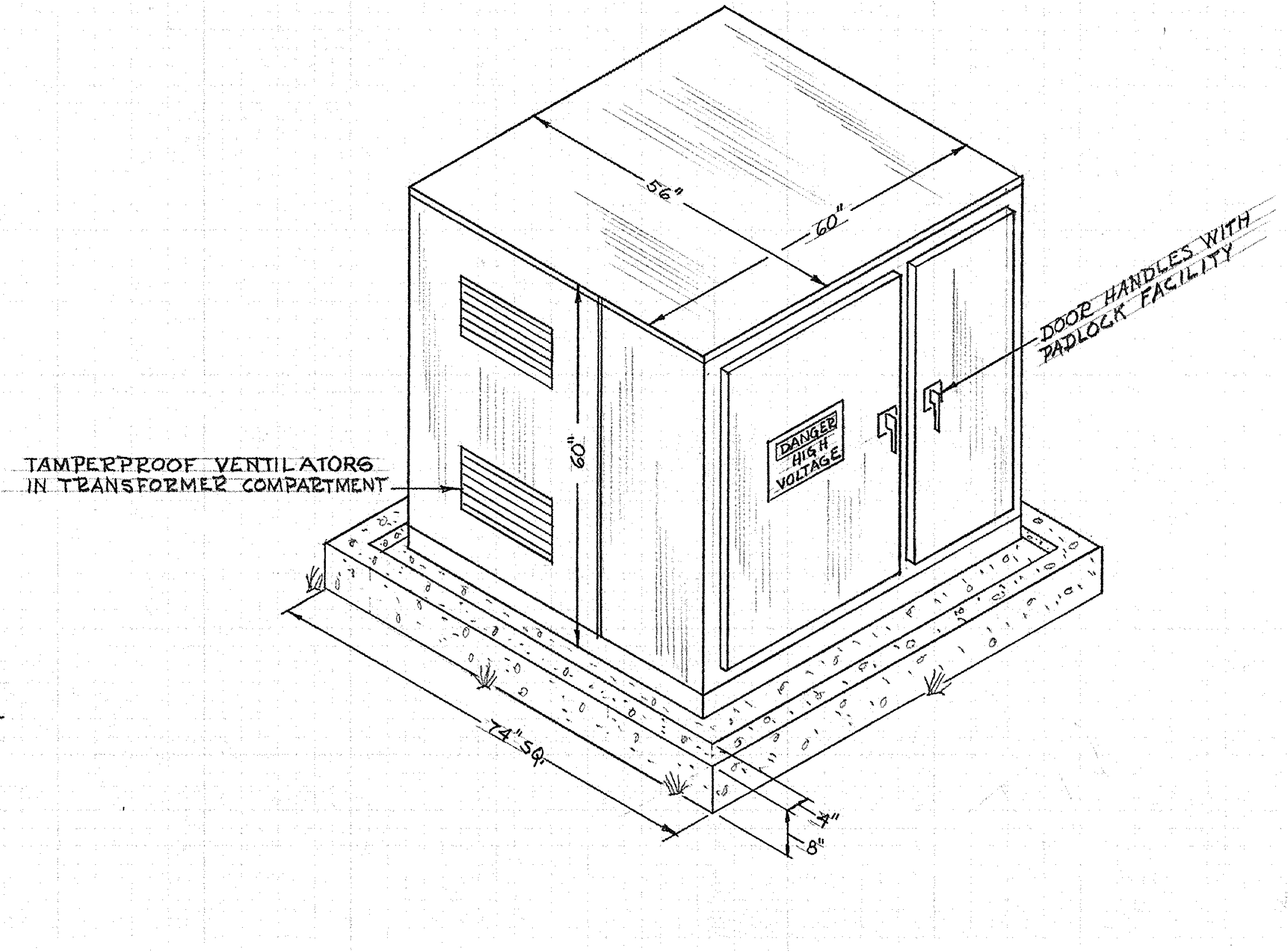
56"
60"
60"
DANGER HIGH VOLTAGE
TAMPERPROOF VENTILATORS IN TRANSFORMER COMPARTMENT
DOOR HANDLES WITH PADLOCK FACILITY
74" SQ.
4"
8"

TYP. TRANSFORMER & PAD DETAIL (5/E9)
NO SCALE

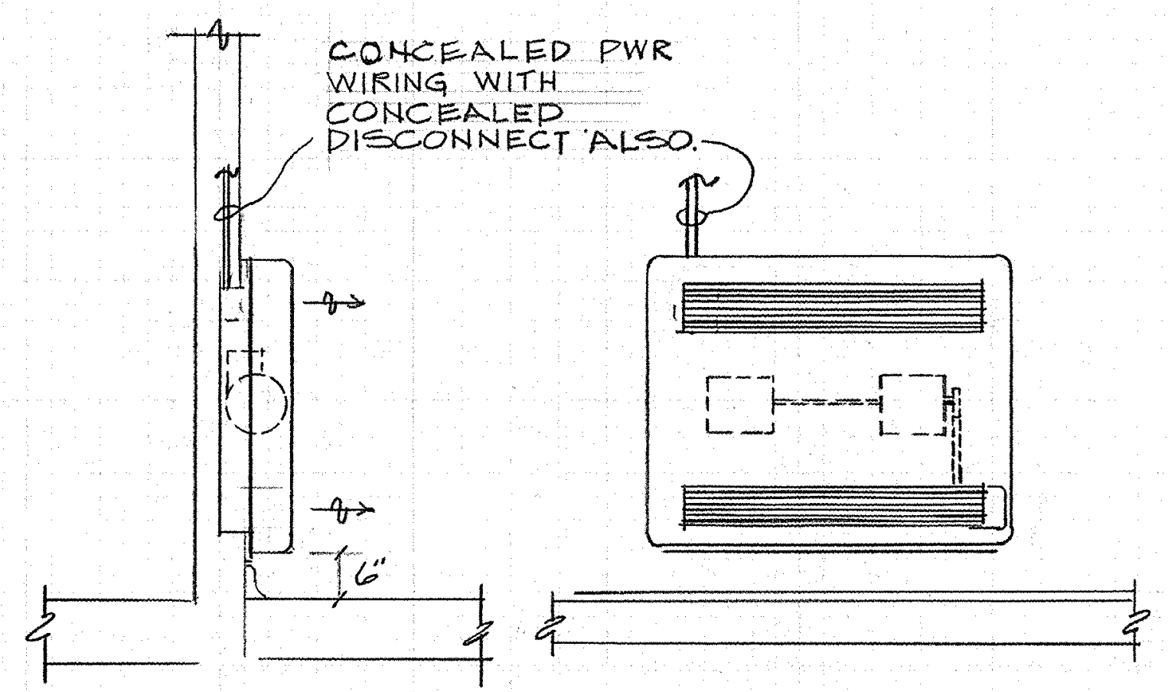
CONCEALED PWR WIRING WITH CONCEALED DISCONNECT ALSO.
6"

TYPICAL C.U.H. INSTALLATION (6/E9)

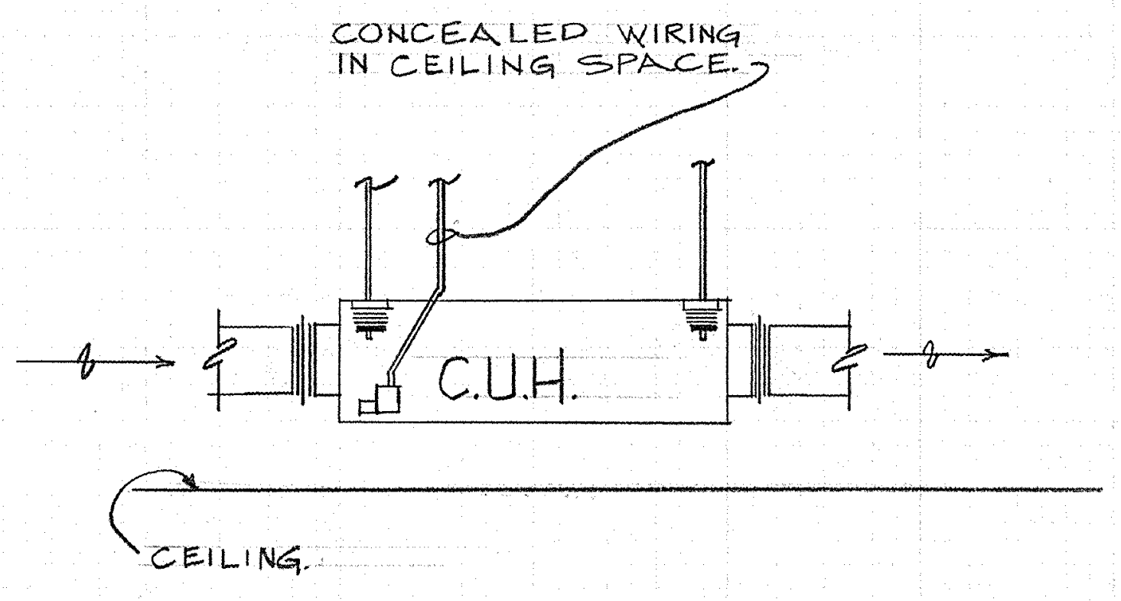
CONCEALED WIRING IN CEILING SPACE.
C.U.H.
CEILING.

TYPICAL CEILING C.U.H. INSTALLATION DETAIL (7/E9)

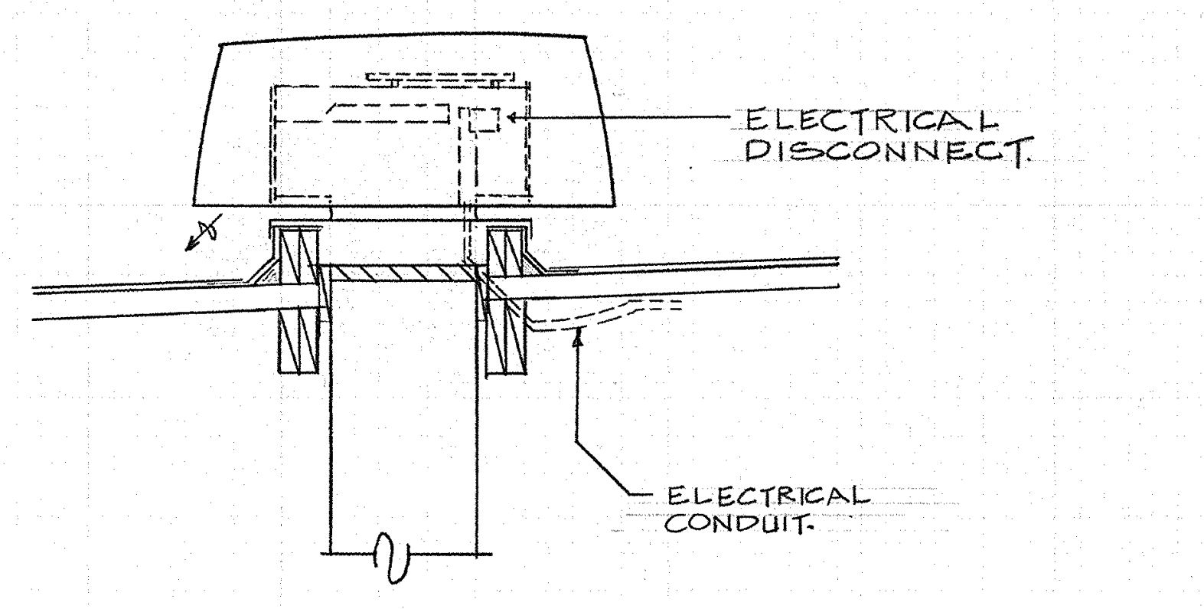
ELECTRICAL DISCONNECT.
ELECTRICAL CONDUIT.

NOTE: FOR MORE DETAILS, SEE TYPICAL REF INSTALLATION (D/M-2)

TYPICAL R.E.F. INSTALLATION (8/E9)

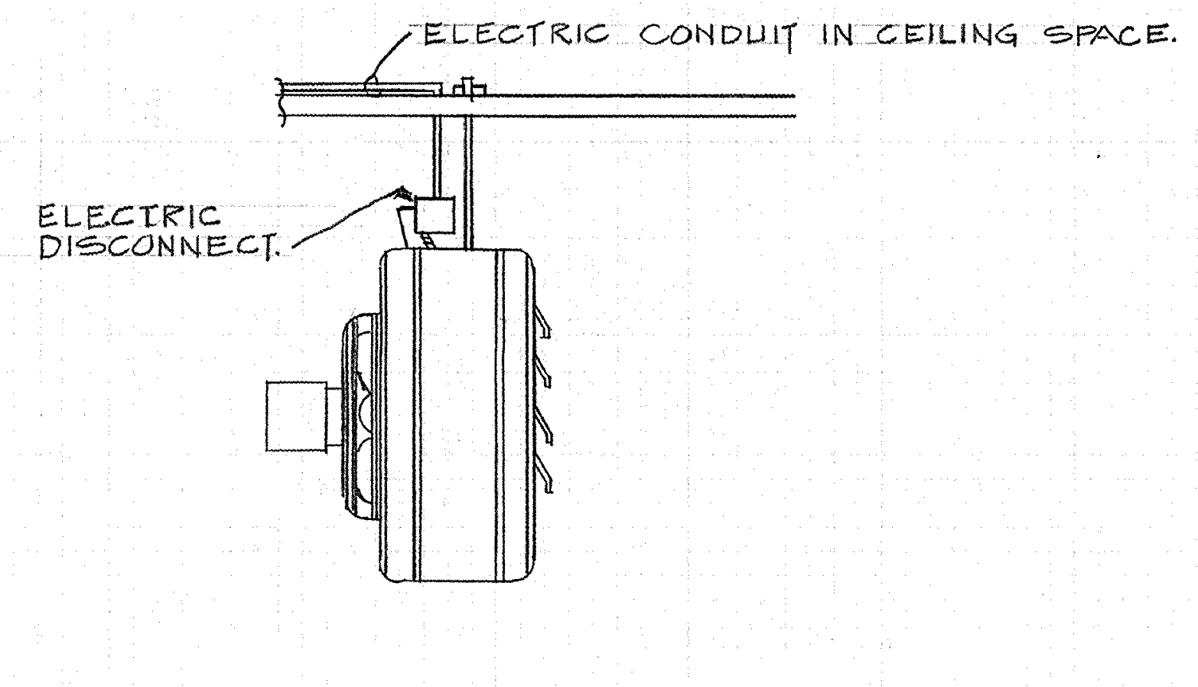
ELECTRIC CONDUIT IN CEILING SPACE.
ELECTRIC DISCONNECT.

UNIT HEATER INSTALLATION DETAIL (9/E9)

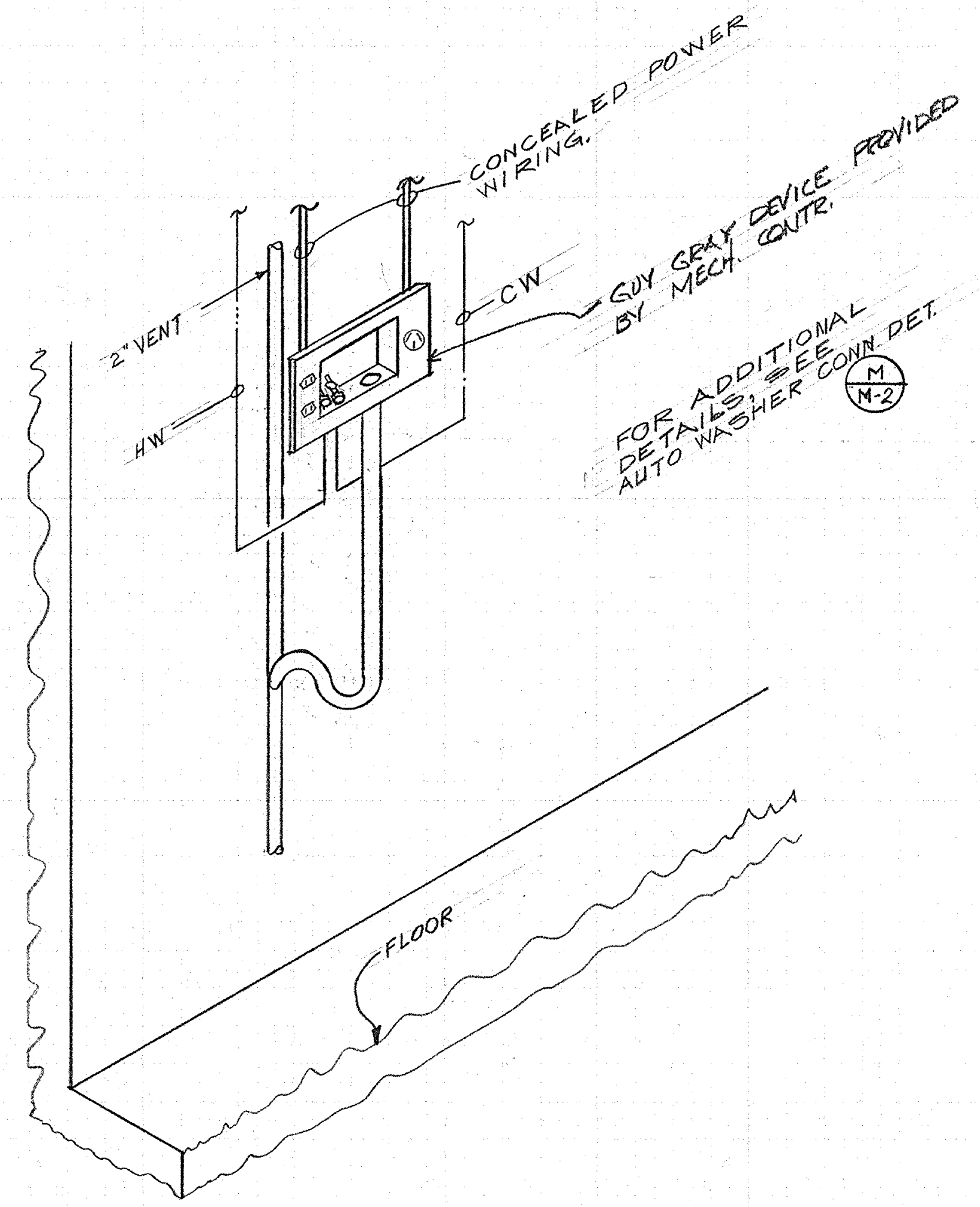
CONCEALED POWER WIRING.
GUY GRAY DEVICE PROVIDED BY MECH. CONTR.
2" VENT
HW
CW
FLOOR

FOR ADDITIONAL DETAILS, SEE AUTO WASHER CONN. DET. (M/M-2)

AUTO. WASHER CONNECTION DETAIL (10/E9)

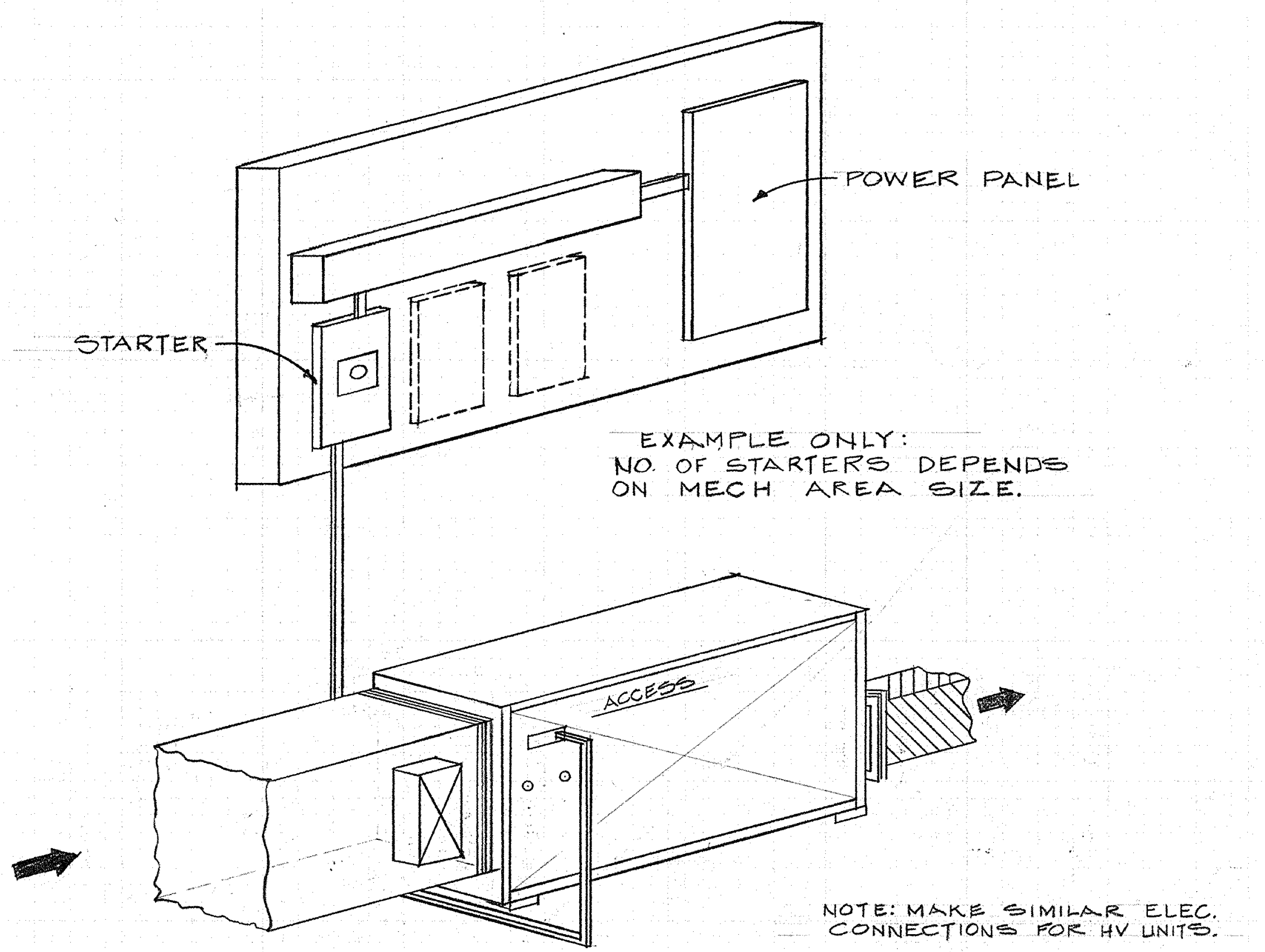
POWER PANEL
STARTER
ACCESS

EXAMPLE ONLY:
NO. OF STARTERS DEPENDS ON MECH AREA SIZE.

NOTE: MAKE SIMILAR ELEC. CONNECTIONS FOR HV UNITS.

FLOOR MTD HEAT PUMP INSTALLATION (11/E9)

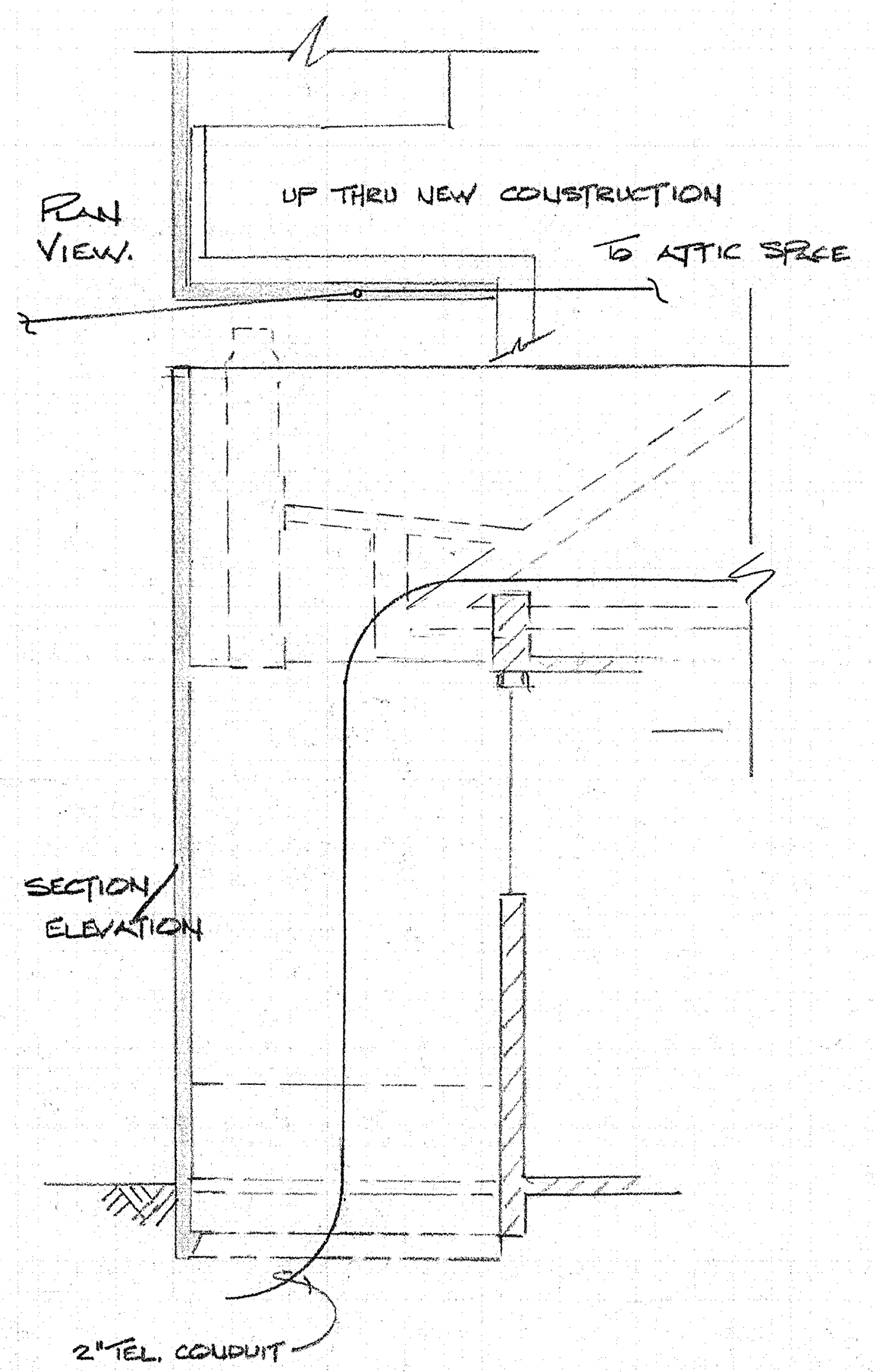
PLAN VIEW.
UP THRU NEW CONSTRUCTION
TO ATTIC SPACE
SECTION/ELEVATION
2" TEL. CONDUIT

TELEPHONE CONDUIT DETAIL (12/E9)

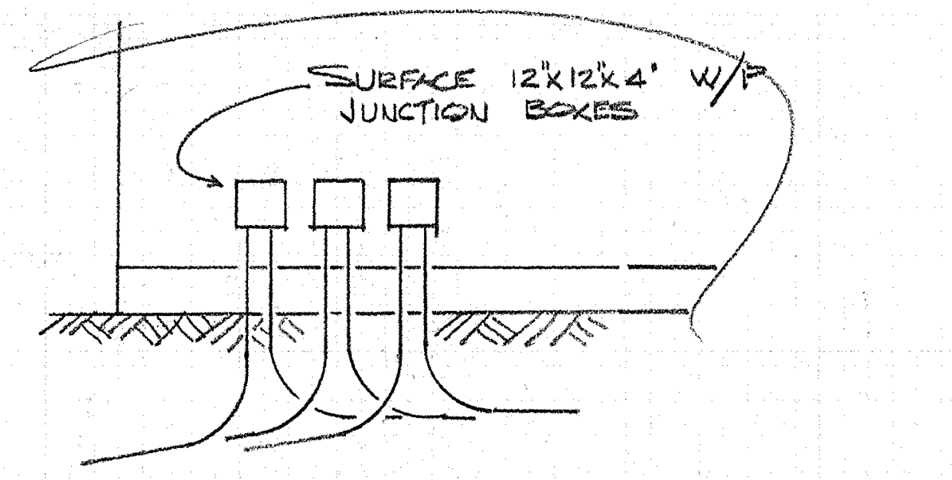
SURFACE 12"X12"X4" W/P JUNCTION BOXES

CONDUIT & 'J' BOX DETAIL: (13/E9)
EXTENSION OF CLOCK, PROGRAM, INTERCOM, TELEPHONE AND FIRE ALARM SYSTEMS.

FRED W. MARTINSON, JR.
3926
JAN. 6, 1956
Fred W. Martinson
NOV. 19, '73

POWER DETAILS
SWEET HOME HIGH SCHOOL
ADDITIONS AND ALTERATIONS 1974
DISTRICT 55 LINN COUNTY, OREGON

ARCHITECTS
HAMLIN, MARTIN, SCHULTZ & GEYER
AIA
159 W. 12TH EUGENE, OREGON 97401

E
9
JOB NO.

CLARE K. HAMLIN
Clare K Hamlin
EUGENE, OREGON

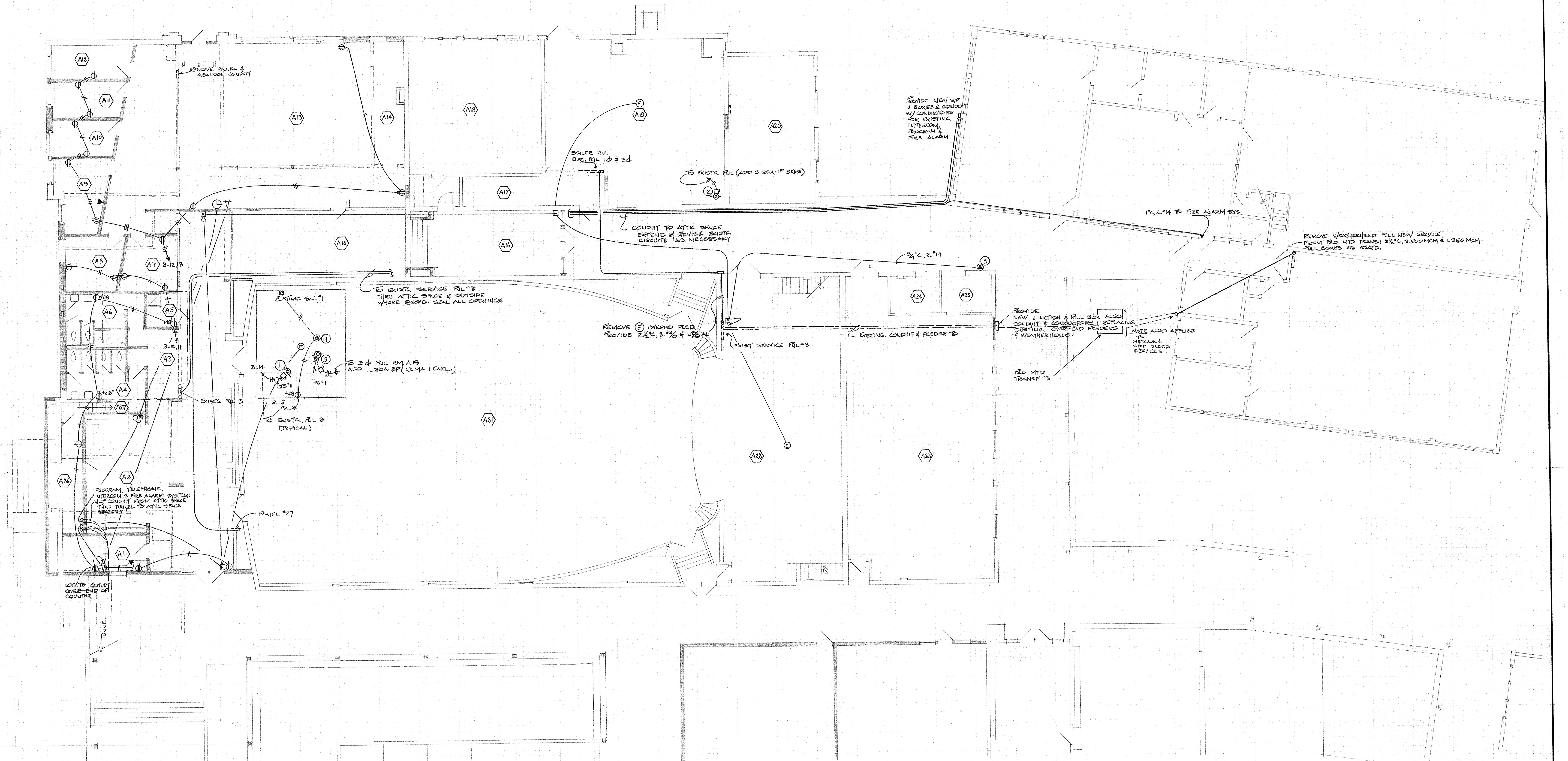
REMOVE PANEL & ABANDON CONDUIT
A12
A11
A10
A9
A13
A14
A18
A19
A20
A17
A15
A16
A8
A7
3-12,13
+48
A6
A5
+48
3-10,11
A3
+48"
A4
A27
A26
A2
A1
BOILER RM. ELEC. PNL 1Φ & 3Φ
TO EXISTG PNL (ADD 3-20A·1P BKRS)
CONDUIT TO ATTIC SPACE EXTEND & REVISE EXISTG CIRCUITS AS NECESSARY
PROVIDE NEW WP J BOXES & CONDUIT W/ CONDUCTORS FOR EXISTING INTERCOM, PROGRAM & FIRE ALARM
1"C, 6-#14 TO FIRE ALARM SYS.
REMOVE WEATHERHEAD PULL NEW SERVICE FROM PAD MTD TRANS.: 3½"C, 3-500 MCM & 1-350 MCM PULL BOXES AS REQ'D.
3/4"C, 2-#14
5
A24
A25
TO EXISTG SERVICE PNL #3 THRU ATTIC SPACE & OUTSIDE WHERE REQ'D. SEAL ALL OPENINGS
TIME SW #1
4
F
3
1
3-14
TS #1
TS #1
+48
3-15
TO 3Φ PNL RM. A19 ADD L-30A 3P (NEMA 1 ENCL.)
TO EXISTG PNL 3 (TYPICAL)
EXISTG PNL 3
REMOVE E OVERHD FEED PROVIDE 2½"C, 3-#4/0 & 1-#2/0 AL
EXIST SERVICE PNL #3
EXISTING CONDUIT & FEEDER TO
PROVIDE NEW JUNCTION & PULL BOX ALSO CONDUIT & CONDUCTORS REPLACING EXISTING OVERHEAD FEEDERS & WEATHERHEADS.
NOTE ALSO APPLIES TO METALS & SHOP BLDGS SERVICES
PAD MTD TRANSF #3
A21
A22
A23
2
PROGRAM, TELEPHONE, INTERCOM & FIRE ALARM SYSTEM: 4-2" CONDUIT FROM ATTIC SPACE THRU TUNNEL TO ATTIC SPACE SECTOR 'C'
PANEL #27
LOCATE OUTLET OVER END OF COUNTER
TUNNEL

POWER PLAN - SECTOR 'A'

SCALE 1/8" = 1'-0"

SECTOR "A" EQUIPMENT CONNECTION SCHEDULE

ITEM	QUAN.	DESCRIPTION	LOAD	VOLTS	Ø	BREAKER	CIRCUIT	ROUGH-IN	ROOM LOC.	REMARKS
1	1	UEF-1	1/6 HP	120	1	20A·1P	2-#12	VERIFY	ATTIC MECH. RM.	
2	1	H.W. RECIRC. PUMP	1/6 HP	120	1	20A·1P	2-#12	"	A-19	
3	1	HV-1	5 HP	240	3	30A·3P	3-#10	"	ATTIC MECH RM.	
4	1	ELEC. CONTROLS		120	1	20A·1P	2-#12	"	ATTIC MECH. RM.	
5	1	FIRE ALARM	—	—	—	—	—	"	—	TIE INTO FIRE ALARM SYSTEM (FLO-SW. ON MECH BELL) SEE MECH. DET'L A/M-4

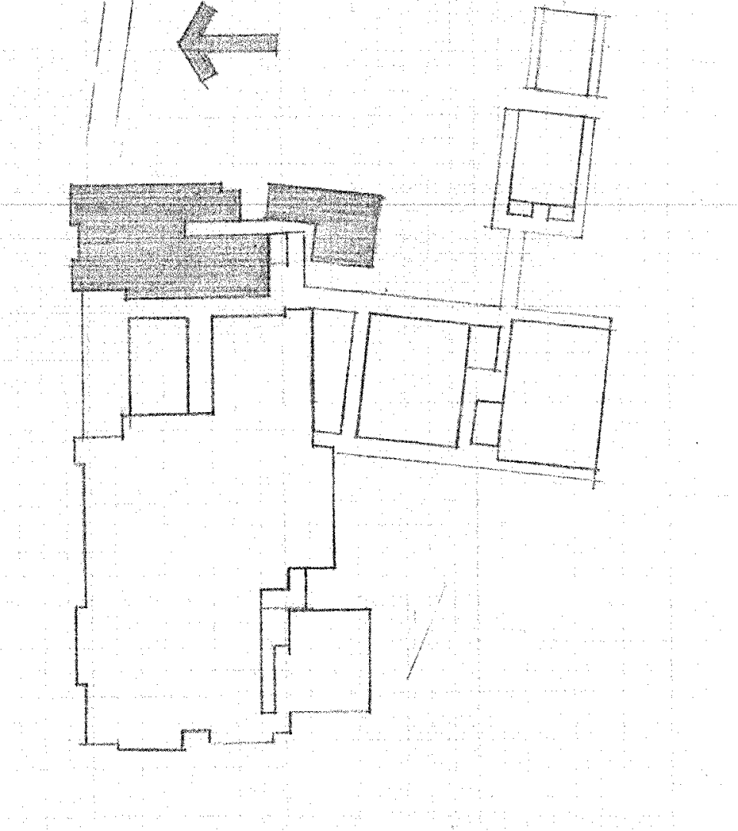

FIRE ALARM SYSTEM

REPLACE ALL BREAKGLASS STATIONS & SIRENS

REFERENCE: SITE PLAN

ZONES TO BE
- #1 SECTOR A
- #2 SECTOR B
- #3 SECTOR C
- #4 SECTOR D
- #5 SECTOR E
- #6 METALS & WOOD SHOP BLDG.
- #7 ARTS & CRAFTS BLDG.
- #8 AUTO SHOP
- #9 FORESTRY BLDG
- #10 NEW GYM
- #11
- #12

(#6–#8:) PROVIDE UNDER ALT 'C' ONLY SPACE PROVIDED UNDER BASIC

(#11–#12:) FUTURE

REGISTERED PROFESSIONAL ENGINEER 3926 OREGON JAN. 6, 1956 FRED W. MARTINSON, JR.

Fred W. Martinson

NOV. 19, '73

POWER - SECTOR A

SWEET HOME HIGH SCHOOL
ADDITIONS AND ALTERATIONS 1974
DISTRICT 55 LINN COUNTY, OREGON

ARCHITECTS
HAMLIN, MARTIN, SCHULTZ & GEYER
AIA
159 W. 12TH EUGENE, OREGON 97401

E
10
JOB NO.

REGISTERED ARCHITECT CLARE K. HAMLIN EUGENE, OREGON STATE OF OREGON

Clare K Hamlin

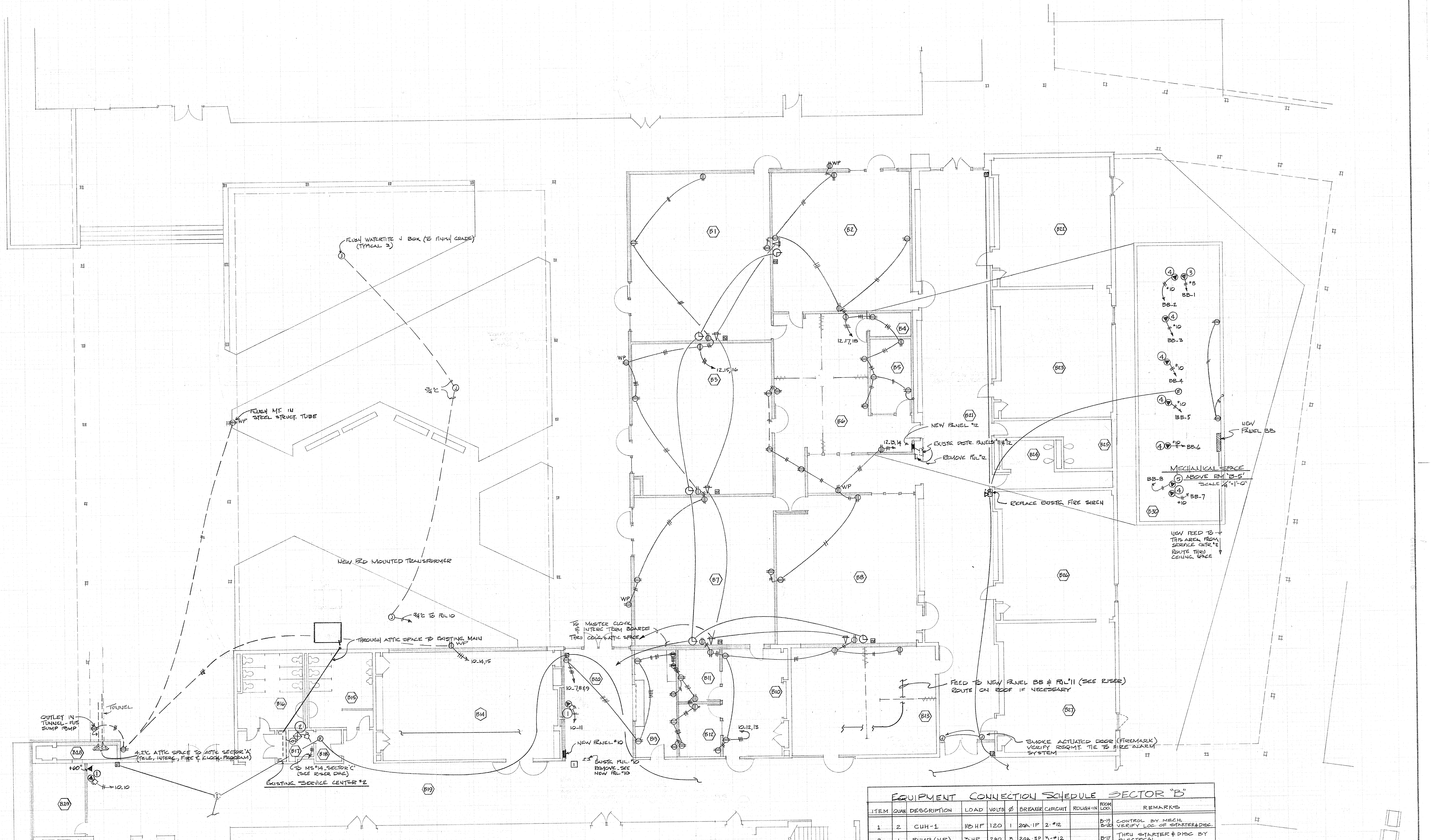
FLUSH WATERTITE J BOX (TO FINISH GRADE) (TYPICAL 3)
3/4"C
FLUSH MT. IN STEEL STRUCT. TUBE
WP
NEW PAD MOUNTED TRANSFORMER
3/4"C TO PNL 10
THROUGH ATTIC SPACE TO EXISTING MAIN
10_14,15
TUNNEL
OUTLET IN TUNNEL - FUT. SUMP PUMP
4-2"C ATTIC SPACE TO ATTIC SECTOR 'A' (TELE, INTERC, FIRE & CLOCK-PROGRAM)
+60"
10_10
TO MS#14_SECTOR 'C' (SEE RISER DIAG.)
EXISTING SERVICE CENTER #2
TO MASTER CLOCK & INTERC TERM BOARDS THRU CEILG & ATTIC SPACE
10_7,8&9
10-11
NEW PANEL #10
EXISTG PNL. #10 REMOVE_SEE NEW PNL #10
10-12,13
FEED TO NEW PANEL BB & PNL #11 (SEE RISER) ROUTE ON ROOF IF NECESSARY
SMOKE ACTUATED DOOR (FIREMARK) VERIFY REQMT. TIE TO FIRE ALARM SYSTEM
12,15,16
12,17,18
12,13,14
NEW PANEL #12
EXISTG DISTR. PANELS #11 & #12
REMOVE PNL #12
REPLACE EXISTG FIRE SIREN
NEW PANEL BB
MECHANICAL SPACE ABOVE RM 'B-5' SCALE 1/4"=1'-0"
NEW FEED TO THIS AREA FROM SERVICE CNTR #2 ROUTE THRU CEILING SPACE
BB-1
BB-2
BB-3
BB-4
BB-5
BB-6
BB-7
BB-8
#10
B1
B2
B3
B4
B5
B6
B7
B8
B9
B10
B11
B12
B13
B14
B15
B16
B17
B18
B19
B20
B21
B22
B23
B24
B25
B26
B27
B28
B29
B30

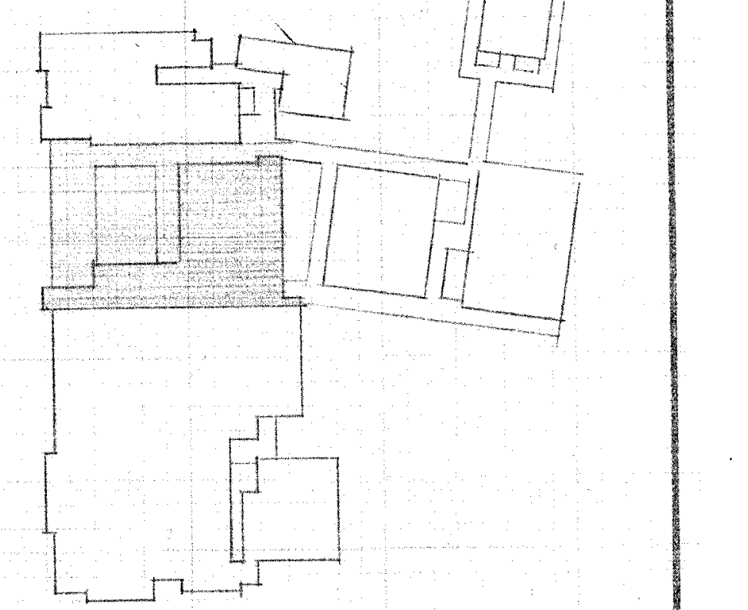

POWER PLAN SECTOR B

SCALE 1/8"=1'-0"

EQUIPMENT CONNECTION SCHEDULE SECTOR "B"

ITEM	QUAN	DESCRIPTION	LOAD	VOLTS	Ø	BREAKER	CIRCUIT	ROUGH-IN	ROOM LOC.	REMARKS
1	2	CUH-1	1/8 HP	120	1	20A·1P	2-#12		B-19 B-20	CONTROL BY MECH. VERIFY LOC. OF STARTER & DISC.
2	1	PUMP (V.P.)	3 HP	240	3	20A·3P	3-#12		B-17	THRU STARTER & DISC BY ELECTRICAL
3	1	H.P.-1	18.7 A	240	1	40A·2P	2-#8		B-30	THRU TIME CLOCK CONTROLLED PNL.
4	6	H.P.-2,3,4,5,6,&7	16.7 A	240	1	30A·2P	2-#10		B-30	THRU TIME CLOCK CONTROLLED PNL.
5	1	HP-8	12.2 A	240	1	20A 2P	2-#12		B-30	THRU TIME CLOCK CONTROLLED PNL.

NOTES

1. REPLACE EXISTING PANEL. RECONNECT ALL CEILING CIRCUITS. ABANDON CIRCUITS AND CONDUIT INTO FLOOR SLAB. PROVIDE RECESSED GUTTER (6x6x20 MIN.) IN CEILING FOR EXTENSION OF CIRCUITS TO NEW PANEL.
2. ROOMS B9, B10, B11, B12, B13 & B14; REMOVE EXISTING FEEDER CONUIT FLUSH OR BELOW FLOOR LEVEL. (FEEDING EXISTING OUTLETS IN WORK AND DEMONSTRATION TABLES). ELECTRICAL CONTRACTOR TO VERIFY NUMBER AND TYPE OF LOCATIONS.

REGISTERED PROFESSIONAL ENGINEER 3926 OREGON JAN. 6, 1956 FRED W. MARTINSON, JR.
Fred W. Martinson
NOV. 19, '73

POWER - SECTOR B
SWEET HOME HIGH SCHOOL
ADDITIONS AND ALTERATIONS 1974
DISTRICT 55 LINN COUNTY, OREGON

ARCHITECTS
HAMLIN, MARTIN, SCHULTZ & GEYER
AIA
159 W. 12TH EUGENE, OREGON 97401

E
1
JOB NO.

CLARE K. HAMLIN
Clare K. Hamlin
EUGENE, OREGON

+60"
RELOCATE TELEPHONE
REMOVE EXISTG BREAKGLASS STATION
FIRE ALARM ANN. PANEL
MASTER CLOCK
TO MASTER FIRE ALARM PNL RM D3
C1
TIME SW 4 VERIFY LOCATION
PICK UP EXISTG CIRCUIT
C2
C3
1000 W
EXISTG INTERCOM MASTER
C4
C5
TO PNL 16 (ADD 2_20A·2P BKRS)
C6
C7
C8
C9
C10
C11
C12
C13
C14
C15
C16
TO EXISTG PNL #1
C17
C18
C19
C20
PICK UP EXISTG CIRCUITS FROM PNL #16 OR #17 (VERIFY LOADING)
PNL 16
PNL 17
REPLACE PANELS RECONNECT EXISTG CIRCUITS (VERIFY)
REPLACE EXISTG SIREN
C21
C22
C23
C24
C25
C26
C27
PAD MTD TRANSFORMER
EXISTG SERVICE PNL #1
C28
C29
C30
MECH. RM. IN ATTIC SPACE
C31
PNL 15
EXISTG SERV. PNL #1
C34
C35
C36
C37
C38
RELOCATE
TO INTERCOM MASTER
PICK EXISTG CIRCUIT (VERIFY)
PICK UP EXISTG CIRCUIT
C39
PICK UP EXISTG CIRC. VERIFY
C40
C42
C43
C44
C45
C46
C47
C48
PICK UP CIRCUITS FROM PANEL #14 — VERIFY
RELOCATE & REPLACE EXISTG BREAKGLASS
REPLACE EXISTG PNL #14 RECONNECT CIRCUITS AS REQ'D (VERIFY)
C49
C50
CB-8
CB-9
C51
C52
C53
C55
C56
CB-7
TO INTERC. MASTER
EXISTG PNL #23
C57
C58
C60
C61
C62
13_13
C63
13_14
NEW PANEL 'CB'
TO EXISTG SERV. PNL #1 THRU CEILING SPACE
C65
CB-6
C66
C67
C68
C69
C70
CB-5
C71
C72
13_4,5
C73
C74
CB-4
C75
C76
C77
13_12
C78
CB-3
C79
C80
C81
C82
C83
CB-2
C84
CB-1
13_1,2,3
C85
C86
C87
C88
C89
REPLACE EXISTG PANEL #13
REPLACE EXISTG BREAKGLASS
REPLACE EXISTG SIREN
C91
C92
C93
C94
C95
+48"

POWER PLAN SECTOR 'C'

SCALE 1/8" = 1'-0"

SECTOR "C" EQUIPMENT CONNECTION SCHEDULE

ITEM	QUAN.	DESCRIPTION	—	LOAD	VOLTS	Ø	BREAKER	CIRCUIT	ROUGH IN	ROOM LOC.	REMARKS
1	3	REF - 5,7,8		1/4 HP	120	1	20A·1P	2_#12	ROOF	C63, C34 & C36	—
2	2	REF - 1,6		1/2 HP	240	3	15A·3P	3_#12	ROOF	C83 & C56	PROVIDE CONTROL THRU T.S. INDICATED RM C84
3	2	REF - 2,4		3/4 HP	240	3	15A·3P	3_#12	ROOF	C74 & C65	PROVIDE CONTROL THRU T.S. INDICATED RM C84
4	1	REF - 3		1/3 HP	120	1	20A·1P	2_#12	ROOF	C62	WIRE THRU T.S. 3 RM C84
5	2	SOAP DISPENSING UNITS - 1,2		1/4 HP	120	1	—	2_#12	—	C78	—
6	3	HV - 2,3,4		3 HP	240	3	20A·3P	3_#12	CEIL'G SPACE	C84, 78 & 70	PROVIDE CONTROL THRU T.S. INDICATED RM C84
7	1	HV - 5		2 HP	240	3	20A·3P	3_#12	ATTIC	C19	TIME SW LOCATED RM C1. ADD BKR TO SERV. PNL #1
8	1	Ⓔ GYM HV		10 HP	240	3	50A·3P	3_#8	ATTIC	C31	PROVIDE ADD'T. OF BKR. TO SERV. PNL #1
9	2	Ⓔ CUH, CUH-2		1/4 HP	120	1	—	2_#12	CEILING	C35 & C37	—
10	2	DUPLEX PUMPS & 120V CONTROL		2-1 1/2 HP & 200W	240 120	3 1	15A·3P —	3_#12 AS SHOWN	FLOOR	C49	—
11	2	WHIRLPOOL UNIT		—	—		VERIFY	VERIFY	—	—	TWO EXISTING UNITS ELEC. TO CONNECT
12	1	VALVES & TIMERS CIRCUIT		300W	120	1	—	AS SHOWN	VERIFY	C67	—
13	1	ELECTRIC UNIT HEATER	—	10KW	240	3	30A·3P	3_#10	CEILING MTD	C63	ELEC. PROVIDE & INSTALL W/ THERMOSTAT

Fred W. Martinson
8926
FRED W. MARTINSON, JR.
NOV. 19, '73

POWER - SECTOR C

SWEET HOME HIGH SCHOOL
ADDITIONS AND ALTERATIONS 1974
DISTRICT 55 LINN COUNTY, OREGON

ARCHITECTS
HAMLIN, MARTIN,
SCHULTZ & GEYER
AIA
159 W. 12TH EUGENE, OREGON 97401

E
12
JOB NO.

CLARE K. HAMLIN
Clare K. Hamlin
EUGENE, OREGON

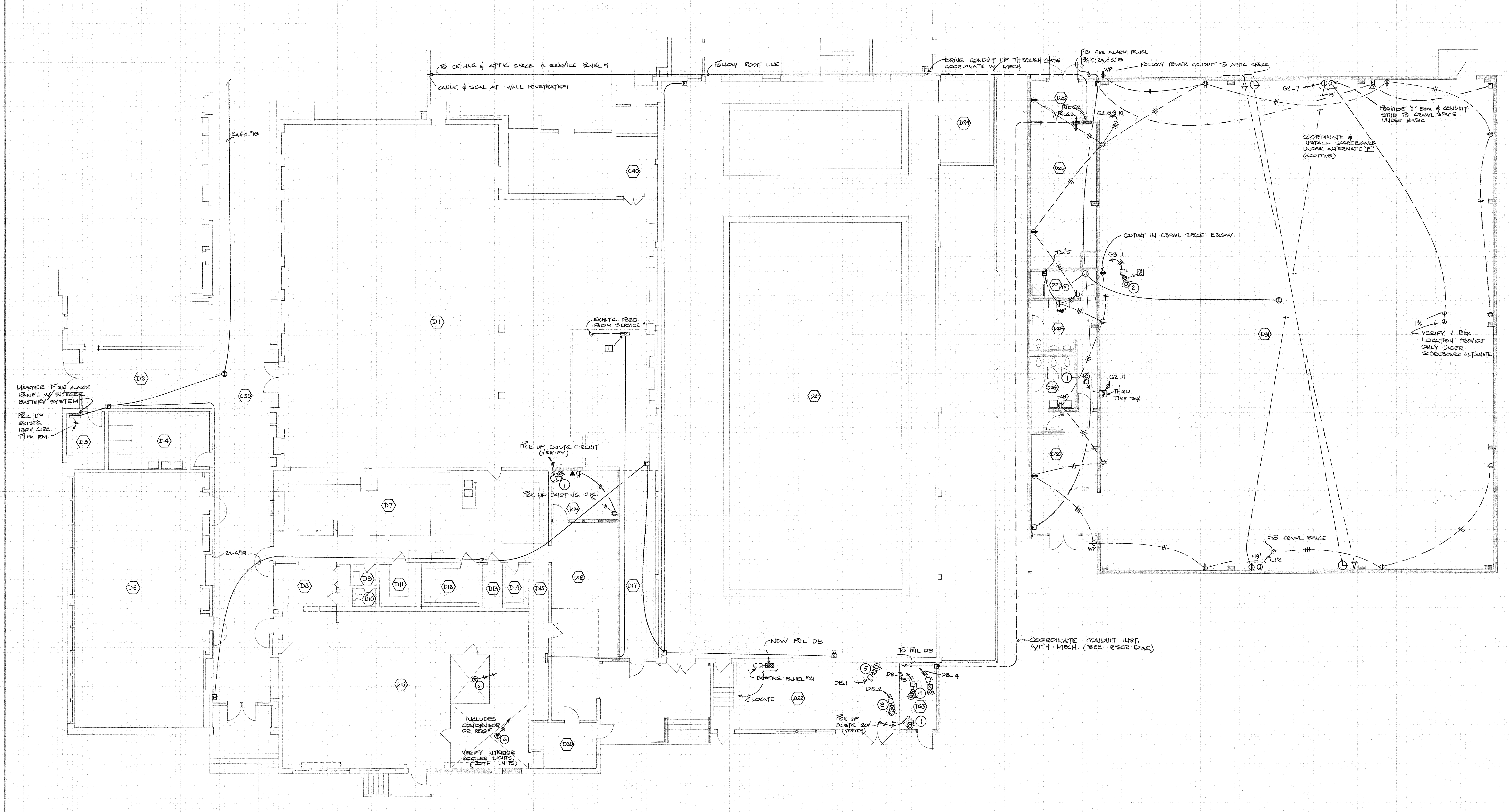
TO CEILING & ATTIC SPACE & SERVICE PANEL #1
CAULK & SEAL AT WALL PENETRATION
FOLLOW ROOF LINE
BRING CONDUIT UP THROUGH CHASE COORDINATE W/ MECH.
TO FIRE ALARM PANEL 3/4"C; 2A, & 5-#18
FOLLOW POWER CONDUIT TO ATTIC SPACE
WP
PNL G2
PNL G3
G2-8,9,10
G2-7
+19'
PROVIDE 'J' BOX & CONDUIT STUB TO CRAWL SPACE UNDER BASIC
COORDINATE & INSTALL SCOREBOARD UNDER ALTERNATE 'F' (ADDITIVE)
2A & 4-#18
C40
D1
D2
C30
MASTER FIRE ALARM PANEL W/ INTEGRAL BATTERY SYSTEM
PICK UP EXISTG 120V CIRC. THIS RM.
D3
D4
D5
EXISTG FEED FROM SERVICE #1
1
PICK UP EXISTG CIRCUIT (VERIFY)
PICK UP EXISTING CIRC.
D7
D16
2A-4#18
D8
D9
D10
D11
D12
D13
D14
D15
D18
D17
D19
D20
INCLUDES CONDENSOR OR ROOF
VERIFY INTERIOR COOLER LIGHTS, (BOTH UNITS)
6
D21
D24
D25
D26
T.S. #5
OUTLET IN CRAWL SPACE BELOW
G3-1
2
D27
+48"
D28
D29
G2-11
THRU TIME SW.
D30
D31
1"C
VERIFY J BOX LOCATION. PROVIDE ONLY UNDER SCOREBOARD ALTERNATE
TO CRAWL SPACE
NEW PNL DB
TO PNL DB
EXISTING PANEL #21
LOCATE
D22
DB-1
DB-2
DB-3
#8
DB-4
D23
3
4
5
PICK UP EXISTG 120V (VERIFY)
COORDINATE CONDUIT INST. WITH MECH. (SEE RISER DIAG)

POWER PLAN SECTOR 'D'

SCALE 1/8" = 1'-0"

NOTE

1 RELOCATE EXISTG PANEL, PROVIDING SURFACE MTD. PULL & JUNCTION BOX ON CEILING, EXTENDING CONDUIT & CONDUCTORS FOR FEED TO WALK-IN COOLERS BEING RELOCATED AS SHOWN IN NEW LOCATION. RELOCATE TIME-CLOCK CONTROL ALSO.

SECTOR "D" EQUIPMENT CONNECTION SCHEDULE

ITEM	QUAN.	DESCRIPTION	LOAD	VOLTS	Ø	BREAKER	CIRCUIT	ROUGH IN	ROOM LOC	REMARKS
1	3	REF-9, 10, UEF-4	1/6 HP	120	1	—	AS SHOWN	—	—	CONTROL AS SHOWN
2	2	HV-6	5 HP	240	3	30A-3P	3-#10	UNDER ROOF	D31	PROVIDE CONTROL THRU T.S. INDICATED
3	1	P-2	2 HP	240	3	15A-3P	3-#12	FLOOR	D-22	
4	1	COOLING TOWER PUMP	1/2 HP	240	3	15A-3P	3-#12	ROOF	D23	
	1	COOLING TOWER FAN MOTOR	10 HP	240	3	50A-3P	3-#8	ROOF	D-23	
5	1	P-1	5 HP	240	3	30A-3P	3-#10	ROOF	D22	VERIFY ROUGH-IN LOC.
6	2	WALK-IN COOLER & FREEZER	—	240	3	VERIFY	VERIFY	—	D19	RELOCATE & RECONNECT EXISTG EQUIPMENT

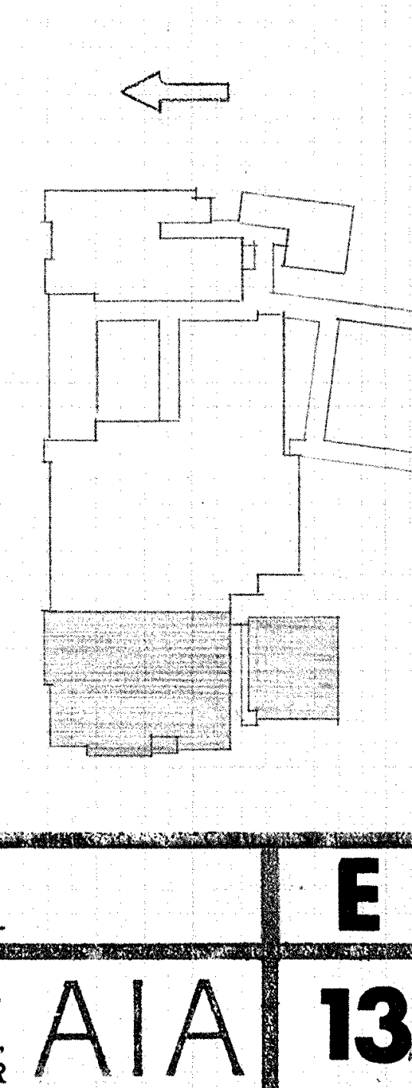

Fred W. Martinson
REGISTERED PROFESSIONAL ENGINEER
3926
OREGON
JAN. 6, 1956
FRED W. MARTINSON, JR.
Nov. 19, '73

POWER - SECTOR D
SWEET HOME HIGH SCHOOL
ADDITIONS AND ALTERATIONS 1974
DISTRICT 55 LINN COUNTY, OREGON

ARCHITECTS
HAMLIN, MARTIN, SCHULTZ & GEYER
AIA
159 W. 12TH EUGENE, OREGON 97401

E
13
JOB NO.

REGISTERED ARCHITECT
CLARE K. HAMLIN
Clare K Hamlin
EUGENE, OREGON
STATE OF OREGON

PAD MTD TRANSFORMER
2-3"C
4-1"C STUBS
CONDUIT STUBS UNDER BASIC
4-1"C TO ARTS & CRAFT BLDG AUTO SHOP & FORESTRY BLDGS. FOR INTERCOM, CLOCK & PROG, ALSO FIRE ALARM (SEE ALTERNATES & SITE PLAN.)
TO CEIL'G SPACE
VERIFY LAYOUT
D.18,19,20
D.13
D.14
D.15
D.16
D.17
COORDINATE W/ IRON BRD CAB (TYPICAL 5)
D.10,11,12
PNLS A&C
D.4,5,6
D.7,8,9
D.23
D.22
D.24
D.25
D.26
D.27
D.21
C.27
C.25
C.23
C.24
IN GUY GRAY UNIT
@ 5'-6" (MICRO-WAVE OVEN ON SHELF)
D.30
PNL B
D-1,2,3
D.31,32
INTERCOM B
TVB
TO INTERCOM TERM. B
CONDUCTORS IN 1"C
2"C (TELE.) STUB. BETWEEN ACCESS. CEILINGS
FOR CLOCK & PROGRAM ALSO INTERCOM, 2-1"C THRU PIPE CHASE IN ARCADE
ARCH DET. 4/25
WP
D.28,29
3/4"C
VERIFY MOUNTG HEIGHT TYPICAL BOTH AREAS
D.33,34,35
+48"
2"C (TELE.) STUB FROM ACCESSIBLE CEILING TO EXISTING ACCESS. ATTIC
1½"C (PAGING SYS), TO ACCESSIBLE ATTIC SPACE, 1"C (CLOCK & PROGRAM) & 1"C (FIRE) THRU PIPE CHASE IN ARCADE
IN TOE SPACE
E1
E2
E3
E4
E5
E6
E7
E10
E11
E12
E13
E14
E15
E16
E17
E18
E20
E21
E22
PANEL B (COORDINATE LOCATION WITH MECH. EQUIP.)
TO RATE-OF-RISE UNIT ROOM E-13
C.26
B-1
B-2
B-3
B-4
B-5
B-6
B-7
B-8
B-9
B-10
B-11
B-12
MECH ROOM ABOVE
SCALE ¼"=1'-0"
VERIFY LAYOUT
D1-4,5,6
D1-7,8,9
D1-1,2,3
TO INTERC. B
+60"
D1-12,13,14
3/4"C
TTB
INTERCOM B
PNLS A1, C1 & D1
D1-10,11
LOCATE
D1-15,16
COORDINATE W/ SHELVING
D1-28,29
TO INTERCOM BOARD
D1-17,18,19
FUTURE COUNTER
1"C
CONDUIT STUB, COUPLING FLUSH W/ FLOOR. FLUSH PLUG.
D1-20,21,22
D1-23,24,25
C1-22
IN BASE UNIT
D1-30,31,32
3 OUTLETS @ 2', 4', 6' ABOVE FLR
C1-21
D1-26,27
C1-23
C1-24
C1-25
TO CEIL'G SPACE
SW IN BASE CAB. BENEATH HOOD UNIT.
1"C STUB OUTS FOR FUTURE CLOCK & INTERCOM & FIRE
1"C. STUB FOR FUTURE TELE.
E24
E25
E26
E27
E28
E29
E30
E31
E32
E33
E34
E35
E36
E37
E38
E39
E40
E41
E42
E43
E44
E45
E46
E47
E48
E49

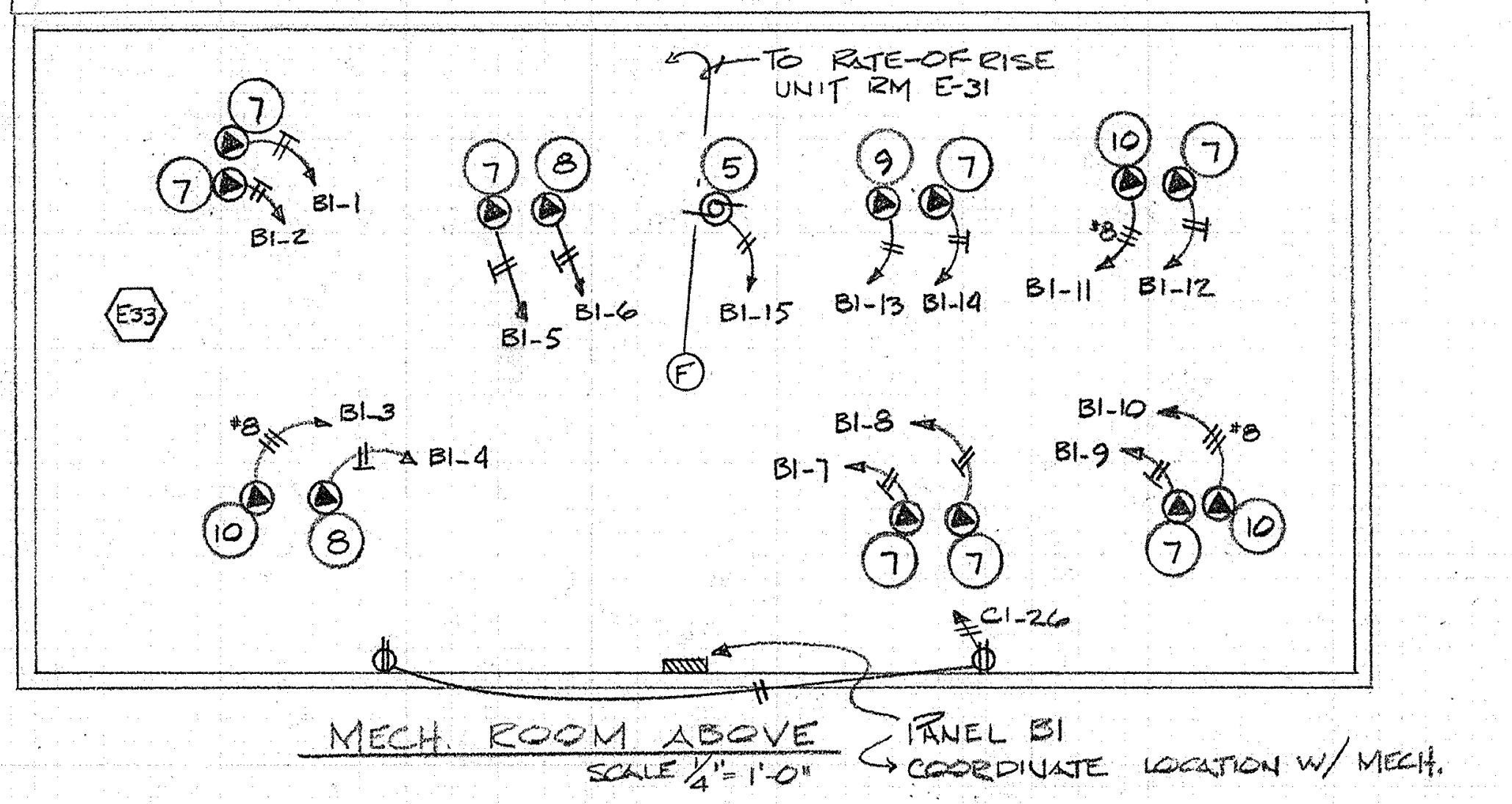
TO RATE-OF-RISE UNIT RM E-31
B1-1
B1-2
B1-3
B1-4
B1-5
B1-6
B1-7
B1-8
B1-9
B1-10
B1-11
B1-12
B1-13
B1-14
B1-15
C1-26
E33

MECH. ROOM ABOVE
SCALE ¼"=1'-0"

PANEL B1
COORDINATE LOCATION W/ MECH.

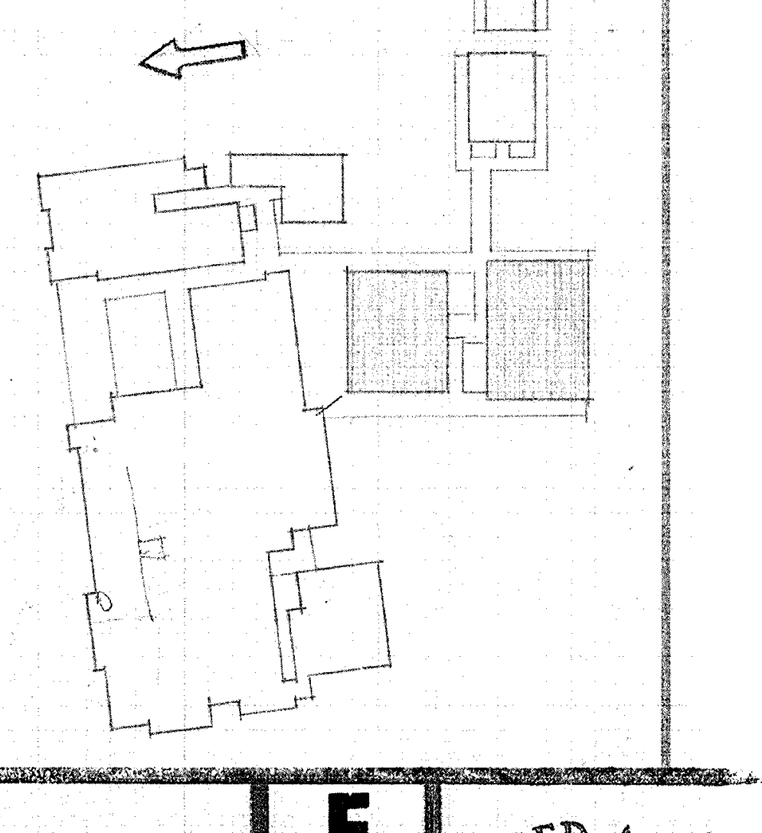

POWER PLAN SECTOR E
SCALE ⅛"=1'-0"

SECTOR "E" EQUIPMENT CONNECTION SCHEDULE

ITEM	QUAN.	DESCRIPTION	LOAD	VOLTS	ø	BREAKER	CIRCUIT	ROUGH-IN	ROOM LOC.	REMARKS
1	5	REF-11,12,13,14, & 15	¼ HP	120	1	20A-1P	AS SHOWN	ROOF	—	SWITCH W/ P.L.: EXCEPT AS NOTED
2	1	GARBAGE DISP.	½ HP	120	1	20A-1P	C-25	—	E2	WIRE THRU SLO IN COUNTER FACE.
3	1	GUY GRAY	WASHER DRYER	208 120	1 1	50A-2P 20A-1P	C-23 C-24	—	E2	WASHER-DRYER UNIT.
4	3	C.E.F.	1/10 HP	120	1	—	—	CEILING	E5	WIRE THRU LITE SW. OR SW/W P.L. AS NOTED.
5	2	UEF-2 & 3	1/6 HP	120	1	20A-1P	AS SHOWN	—	E14	
6	3	HP-10,14, & 18	15.5A	208	3	30A-1P	"	—	E14	
7	11	HP-12,16,17,22,23,24,27,29,30,32,33.	18.7A	208	1	30A-2P	"	—	E14	
8	4	HP-13,15,21,31	16.7A	208	1	30A-2P	"	—	E14	
9	2	HP-19, & 28	12.2A	208	1	20A-2P	"	—	E14	
10	4	HP-11,20,25,26	23.3A	208	3	50A-3P	"	—	E14	
11	1	HP-9	27.1 A	208	3	50A-3P	"	—	E14	

REGISTERED PROFESSIONAL ENGINEER 3926 OREGON JAN. 6, 1956 FRED W. MARTINSON, JR.
Fred W Martinson
NOV. 19, '73

POWER - SECTOR E
SWEET HOME HIGH SCHOOL
ADDITIONS AND ALTERATIONS 1974
DISTRICT 55 LINN COUNTY, OREGON

ARCHITECTS
HAMLIN, MARTIN, SCHULTZ & GEYER
AIA
159 W. 12TH EUGENE, OREGON 97401

E
14
JOB NO.

REGISTERED ARCHITECT CLARE K. HAMLIN
Clare K Hamlin
EUGENE, OREGON STATE OF OREGON

ROOM FINISH SCHEDULE

ROOM NO.	ROOM TITLE	CEILING			WALL FINISH				FLOOR		ELEV. REF.	REMARKS
		MAT.	TYP.	HT.	NORTH	EAST	SOUTH	WEST	MAT'L.	BASE		
1	ROBE STORAGE	H.C. PLAS.	A	—	H.C. PLAS. ①	H.C. PLAS. ①	—	—	—	—		
2	ENSEMBLE	AC. TILE	B	13'-6"	H.C. PLAS. ②	H.C. PLAS. ②	PATCH *	H.C. PLAS. ①	—	—		
3	SMALL PRACTICE	AC. TILE	B	13'-6"	H.C. PLAS. ②	H.C. PLAS. ②	H.C. PLAS. ②	H.C. PLAS. ②	—	—		
4	CHORAL	H.C. PLAS.	A	—	H.C. PLAS. ③	H.C. PLAS. ③	PATCH *	H.C. PLAS. ②	—	—		
5	OFFICE	EXIST'G	—	—	—	—	—	—	—	—		
6	LIBRARY	EXIST'G	—	—	—	—	—	—	—	—		
7	FOYER	EXIST'G	—	—	—	—	—	H.C. PLAS. ①	—	—		

CEILING TYPES

A. 1/2" PLASTER BASE APPLIED TO EXISTING CEILING STRIPPING W/ 1/8" HARD COAT PLASTER. (REMOVE EXISTING TILE)

B. 12"x12" ACOUSTICAL TILE IN CONCEALED ZEE SYSTEM. ZEE SPLINES @ 24" O.C. SECURED TO EXISTING STRIPPING.

WALL FINISH NOTES

① 1/2" PLASTER BASE APPLIED TO 2x4 STUDS W/ 1/8" HARD COAT PLASTER.

② 5/8" GYP. BD. APPLIED TO 2x4 STUDS W/ 1/2" PLASTER BASE AND 1/8" HARD COAT PLASTER.

③ 1/2" PLASTER BASE APPLIED TO UPPER WALL SURFACE W/ 1/8" HARD COAT PLASTER.

DOOR SCHEDULE

DOOR MARK	NO. OF LEAVES	DOOR SIZE	TYPE	DOOR MAT.	FRAME MAT.	ROOM	DETAIL	REMARKS
1	1	3⁰ x 7⁰ x 1 3/4"	FLUSH	S.C.W.	H.M.	1	2A/35 SIM.	
2	1	3⁰ x 7⁰ x 1 3/4"	FLUSH	S.C.W.	H.M.	2	SIM. 15/34	SOUND HARDWARE PER DTL. 1/32.
3	1	3⁰ x 7⁰ x 1 3/4"	FLUSH	S.C.W.	H.M.	3	15/34 SIM.	SOUND HARDWARE PER DTL. 1/32.
4	1	3⁰ x 7⁰ x 1 3/4"	FLUSH	S.C.W.	H.M.	4	SIM. 2A/35	

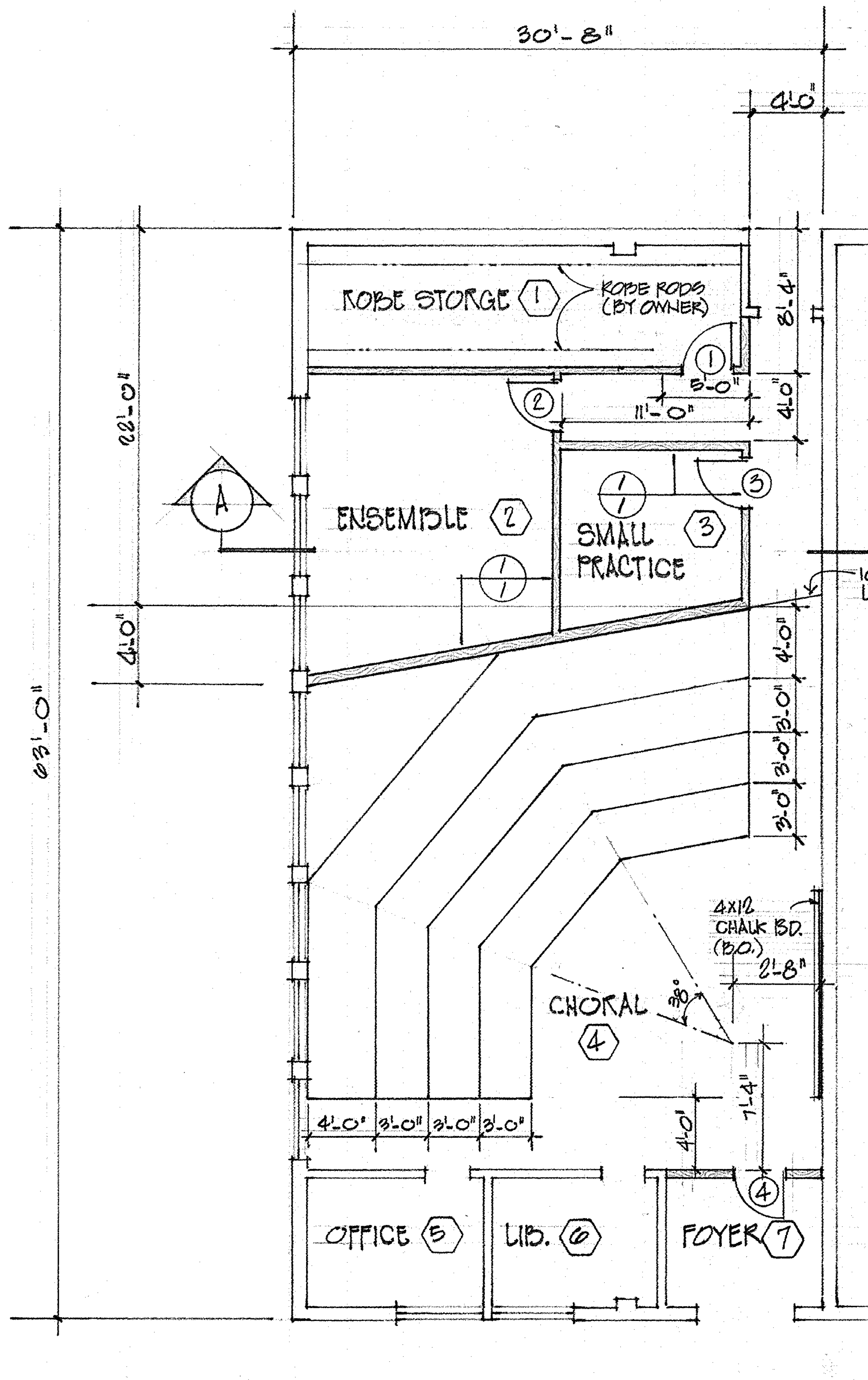
30'-8"
4'-0"
ROBE STORGE 1
ROBE RODS (BY OWNER)
8'-4"
1
2
5'-0"
11'-0"
4'-0"
22'-0"
A
ENSEMBLE 2
SMALL PRACTICE 3
3
1/1
10'-6" CEILING LINE.
4'-0"
63'-0"
4'-0"
3'-0"
3'-0"
3'-0"
4x12 CHALK BD. (B.O.)
2'-8"
30°
CHORAL 4
7'-4"
4'-0"
4'-0" 3'-0" 3'-0" 3'-0"
OFFICE 5
LIB. 6
FOYER 7
4

FLOOR PLAN 1/8"=1'-0"

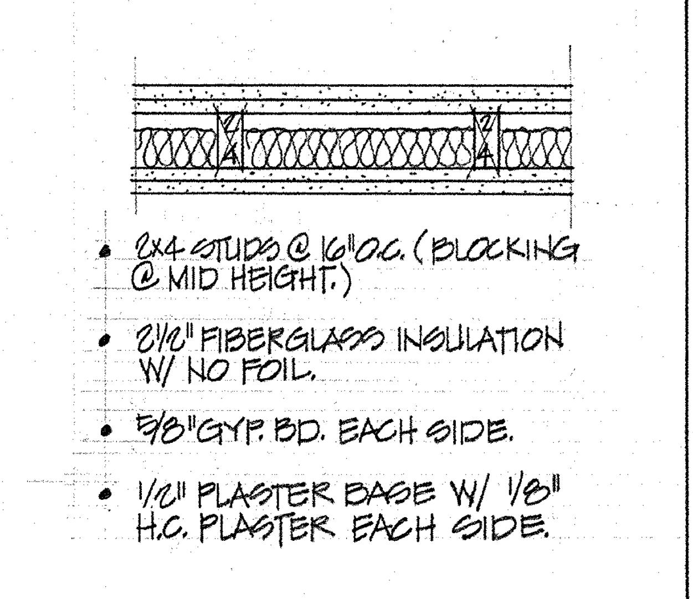

- 2x4 STUDS @ 16" O.C. (BLOCKING @ MID HEIGHT.)
- 2 1/2" FIBERGLASS INSULATION W/ NO FOIL.
- 5/8" GYP. BD. EACH SIDE.
- 1/2" PLASTER BASE W/ 1/8" H.C. PLASTER EACH SIDE.

1/1 SOUND WALL DETAIL 1"=1'-0"

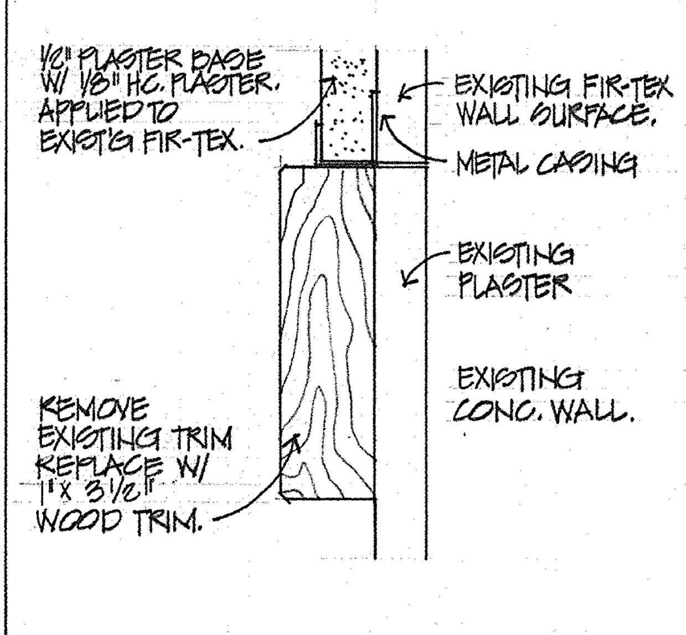
1/2" PLASTER BASE W/ 1/8" H.C. PLASTER. APPLIED TO EXIST'G FIR-TEX.
EXISTING FIR-TEX WALL SURFACE.
METAL CASING
EXISTING PLASTER
EXISTING CONC. WALL.
REMOVE EXISTING TRIM REPLACE W/ 1"x 3 1/2" WOOD TRIM.

2/1 TRIM DTL. AT EXISTING WALLS. 6"=1'-0"

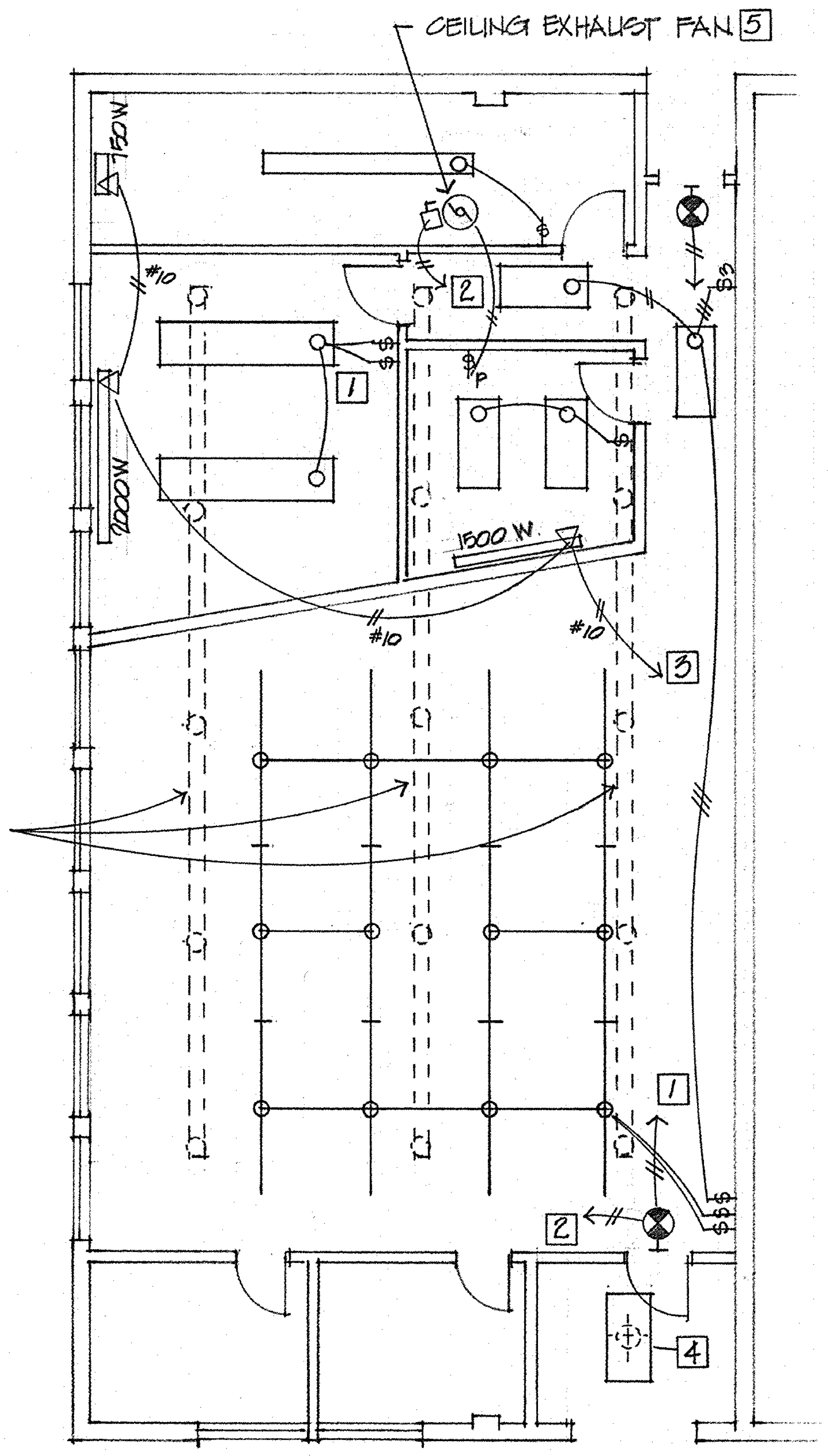
CEILING EXHAUST FAN 5
750W
2000W
#10
#10
#10
1500 W.
1
2
3
1
2
4
REMOVE EXIST'G LIGHT FIXTURES.

ELECTRICAL PLAN 1/8"=1'-0"

BY OWNER

GENERAL NOTES

UTILIZE EXISTING LIGHTING CIRCUITS, MODIFY AS NECESSARY. PROVIDE NEW SWITCHES WHERE SHOWN. OWNER TO PROVIDE ALL FIXTURES.

1 PROVIDE TWO SWITCHES FOR TWO LEVELS OF LIGHT. (HALF OF LAMPS ON EACH SWITCH.)

2 TO NEAREST UNSWITCHED 120V. OUTLET CIRCUIT.

3 ADD 30AMP 2P BREAKER TO EXISTING PANEL AT STAGE ELECTRICAL CENTER. ROUTE CIRCUIT UNDER FLOOR TO TO PANEL OR THROUGH WALL TO STAGE AND SERVICE TO PANEL. VERIFY ROUTE & BREAKER SPACE IN EXIST'G. PANEL.

4 REPLACE EXISTING FIXTURE.

5 REFER TO MECHANICAL PLAN FOR INSTALLATION & RELOCATION OF FAN CONTROL SWITCHES.

⊗ SILTRON MINI-308-120 EXIT SIGN, SELF CONTAINED BATTERY TYPE. (GREEN ON WHITE LETTERING)

▭△ CHROMALOX BASEBOARD HEATERS, 1500 & 2000 WATTS, 220 VOLT WITH INTEGRAL THERMOSTAT SPEC. GRADE 250 W PER FOOT. 750 WATT UNIT IS WALL MOUNTED FWH-1754 W/ SURFACE MOUNTED HOUSING (CHROMALOX).

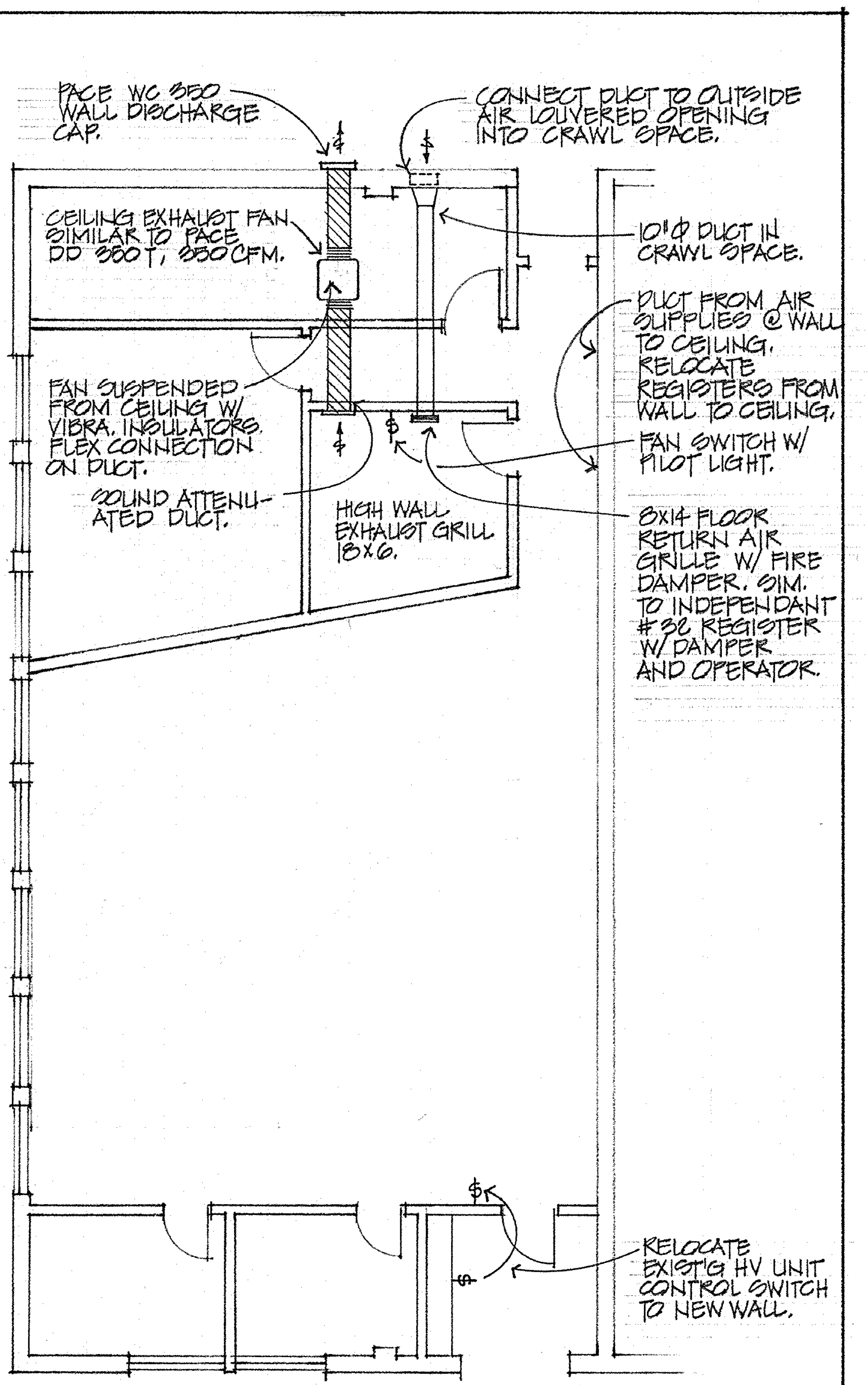
PACE WC 350 WALL DISCHARGE CAP.
CONNECT DUCT TO OUTSIDE AIR LOUVERED OPENING INTO CRAWL SPACE.
CEILING EXHAUST FAN SIMILAR TO PACE DD 350T, 350 CFM.
10"Ø DUCT IN CRAWL SPACE.
DUCT FROM AIR SUPPLIES @ WALL TO CEILING. RELOCATE REGISTERS FROM WALL TO CEILING.
FAN SUSPENDED FROM CEILING W/ VIBRA. INSULATORS. FLEX CONNECTION ON DUCT.
FAN SWITCH W/ PILOT LIGHT.
SOUND ATTENUATED DUCT.
HIGH WALL EXHAUST GRILL 18x6.
8x14 FLOOR RETURN AIR GRILLE W/ FIRE DAMPER. SIM. TO INDEPENDANT #32 REGISTER W/ DAMPER AND OPERATOR.
RELOCATE EXIST'G HV UNIT CONTROL SWITCH TO NEW WALL.

MECHANICAL PLAN 1/8"=1'-0"

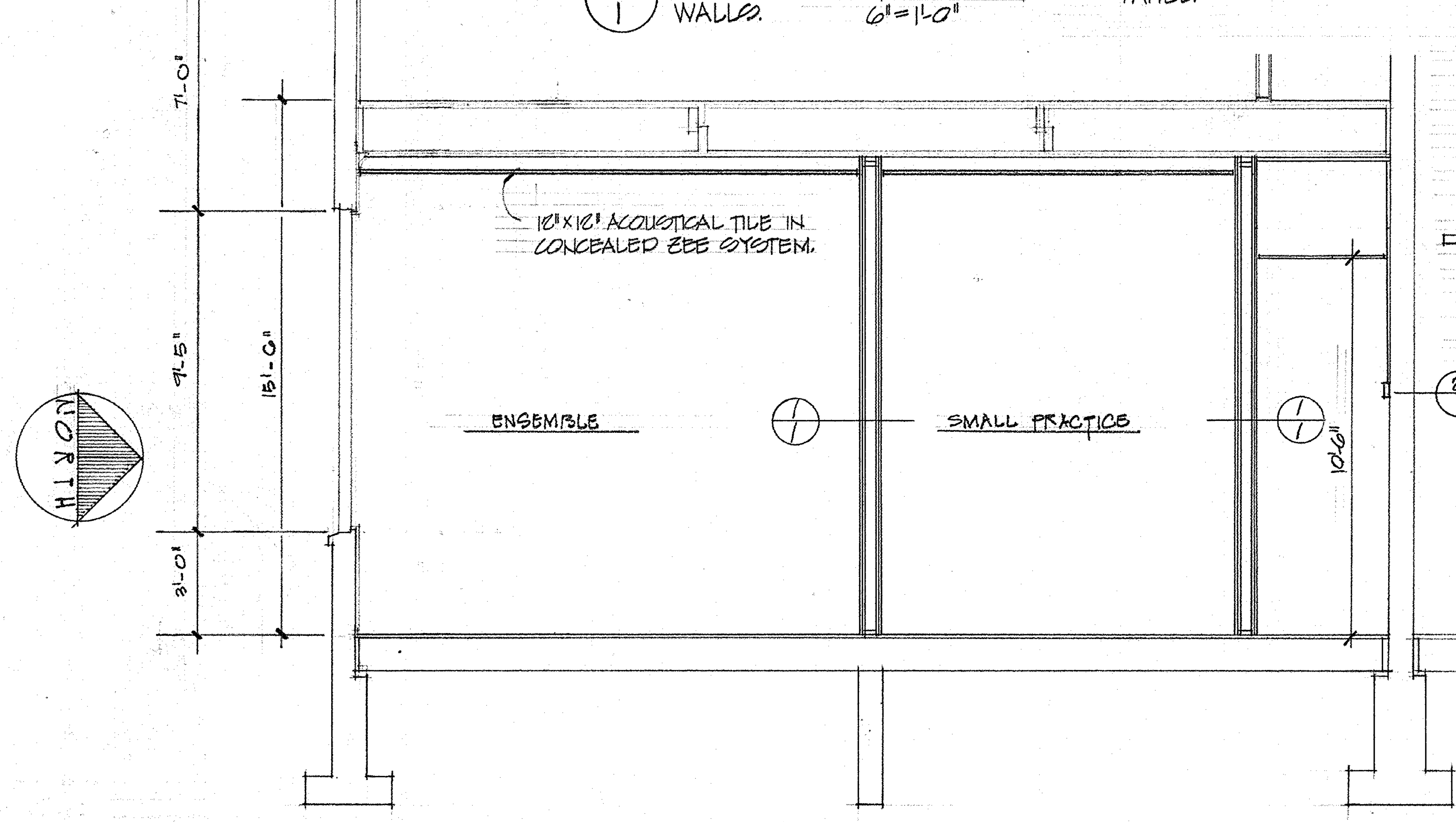
7'-0"
9'-5"
3'-0"
13'-0"
12"x12" ACOUSTICAL TILE IN CONCEALED ZEE SYSTEM.
ENSEMBLE
1/1
SMALL PRACTICE
1/1
10'-6"
2/1 TRIM DTL.
NORTH

SECTION A-A 1/4"=1'-0"

NOTE- ITEMS TO BE DONE BY OWNER

- REMOVAL OF EXISTING CABINETS.
- ALL FLOOR AND BASE WORK.
- CONSTRUCTION OF FLOOR RISERS.
- ROBE RODS
- CHALKBOARD
- ALL PAINTING
- ALL ELECTRICAL WORK AND EQUIP.

CHORAL ROOM REMODEL
JULY 16, 1975

SWEET HOME HIGH SCHOOL
ADDITIONS AND ALTERATIONS 1974
DISTRICT 55
LINN COUNTY, OREGON

ARCHITECTS MARTIN, SCHULTZ & GEYER **AIA**
159 WEST TWELFTH AVENUE, EUGENE, OREGON, 97401 ▪ PHONE: 503-344-0453

REGISTERED ARCHITECT
MICHAEL J. GEYER
EUGENE, OREGON
STATE OF OREGON

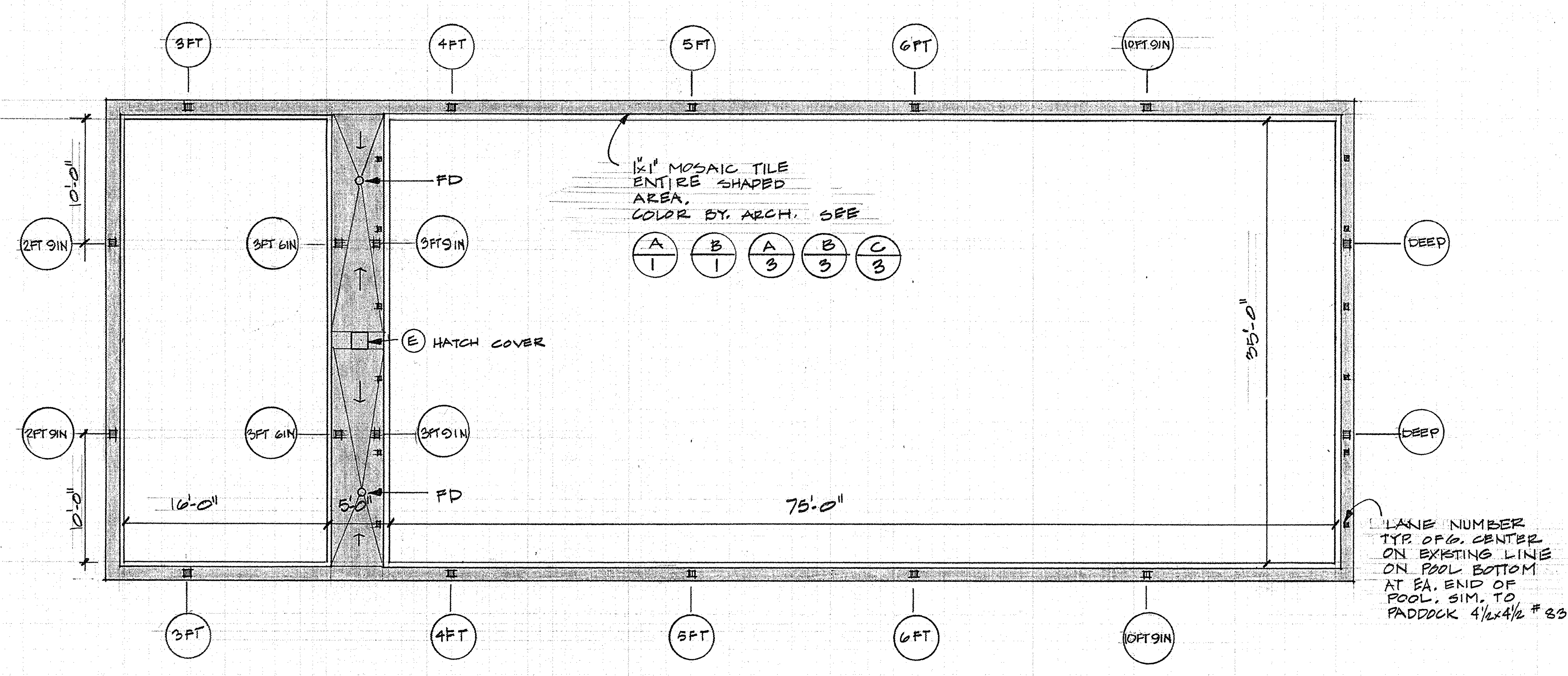
3FT
4FT
5FT
6FT
10FT 9IN
2FT 9IN
3FT 6IN
3FT 9IN
DEEP
FD
E HATCH COVER
1"x1" MOSAIC TILE ENTIRE SHAPED AREA. COLOR BY. ARCH. SEE
A/1 B/1 A/3 B/3 C/3
10'-0"
16'-0"
5'-0"
75'-0"
35'-0"
LANE NUMBER TYP. OF 6. CENTER ON EXISTING LINE ON POOL BOTTOM AT EA. END OF POOL. SIM. TO PADDOCK 4½x4½ # 8315

POOL TILE PLAN

1/8"=1'-0"

1/1

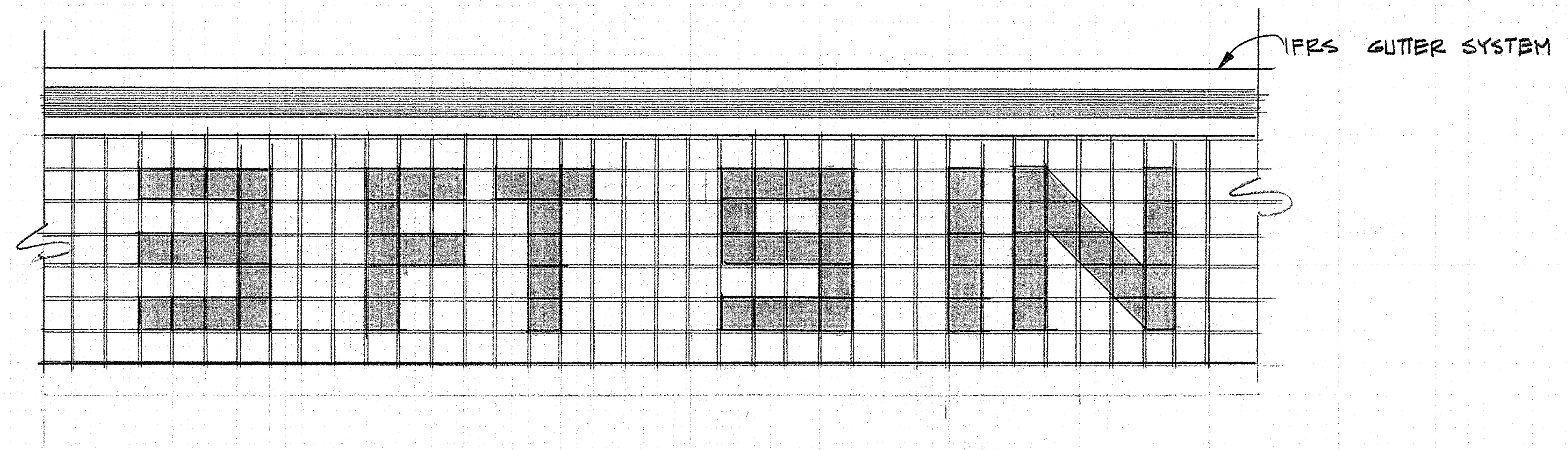
IFRS GUTTER SYSTEM
3FT 9IN

TYP. DEPTH MARKER FOR LARGE POOL

3"=1'-0"

A/1

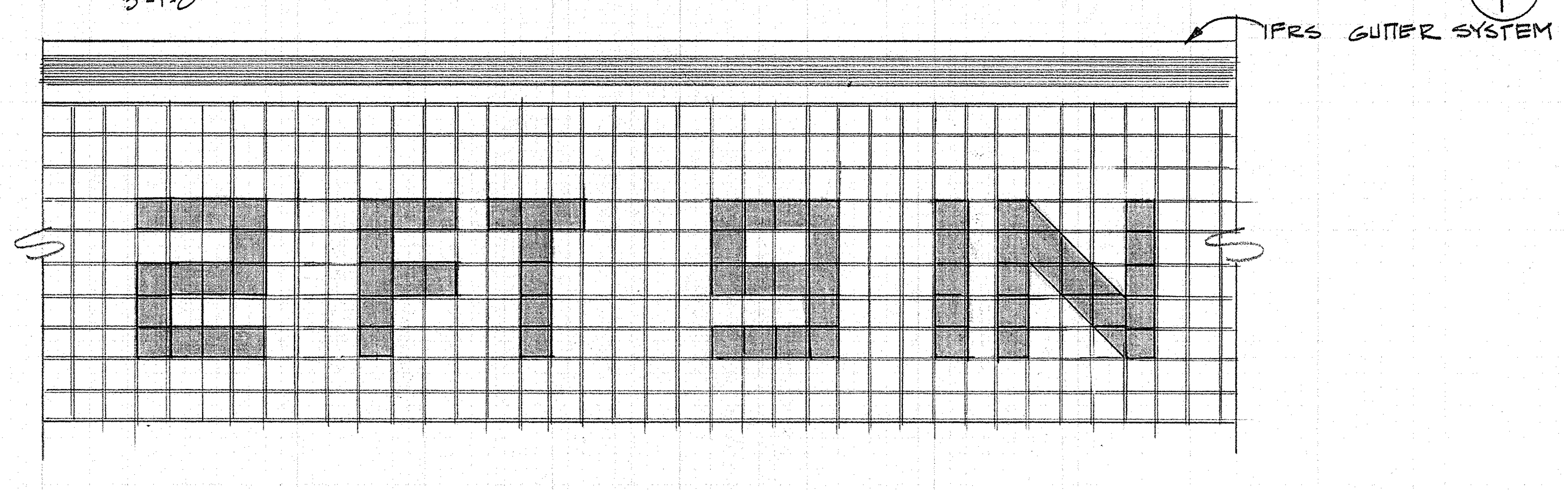
IFRS GUTTER SYSTEM
2FT 9IN

TYP. DEPTH MARKER FOR SMALL POOL

3"=1'-0"

A/1

SHEET INDEX

NO.	TITLE
1.	GEN. NOTES & TILING PLAN
2.	POOL RENOVATION PLAN
3.	GUTTER DETAILS
4.	NOT USED
5.	MECH. RM & BALANCING TANK
6.	H&V PLAN

GENERAL NOTES & SPECIFICATIONS

1. THE CONTRACT DOCUMENTS, INCLUDING DRAWINGS & SPECIFICATIONS FOR CONSTRUCTION OF SWEET HOME HIGH SCHOOL, ADDITION & ALTERATIONS, 1974, PREPARED BY HAMLIN, MARTIN, SCHULTZ & GEYER, ARCHITECTS; ARE HEREBY MADE A PART OF THESE DRAWINGS.
2. WORK HEREUNDER SHALL BE SCHEDULED AS QUICKLY AS POSSIBLE. (TIME IS OF THE ESSENCE). CUTTING AWAY EXIST. GUTTER SYSTEM & REPLACEMENT WITH I.F.R.S. SYSTEM SHOULD BE GIVEN TOP PRIORITY. THIS WORK SHOULD BE COMPLETED DURING THE SCHOOL'S SPRING '75 VACATION TO PERMIT THE POOL TO BE OPERATIONAL AS SOON AS POSSIBLE. H&V WORK IS SECONDARY.
3. PADDOCK IFRS SYSTEM HAS BEEN PURCHASED BY SCHOOL DISTRICT 55 AND IS STORED NEAR THE SITE.
4. INSTALL AS SHOWN ON DRAWINGS & SPECS. & AS PER PADDOCK MFG.'S "IFRS PIPELESS SWIMMING POOLS," 1974; (BROCHURE ON INSTALLATION PROCEDURE).

H&V SPECIFICATIONS

CEU-1 PACE A-24; BISONITE 'M' COATING ALL PARTS EXPOSED TO AIRSTREAM. 8000 CFM @ 0.50" T.S.P. ; 2 HP., 240 V., 3 φ; WEATHERPROOF MAG STARTERS W/ H-O-A SWITCH; TOTALLY WEATHERPROOF UNIT FOR ROOF-TOP INSTALLATION. 4 SPRING ISOLATORS W/ MIN 2" DEFLECTION.

RC-1 & 2 PACE GLYCOL COIL FOR USE ON CHLORINATED SWIMMING POOL EXHAUST AIR. 4 ROW, 10 FINS/INCH. MAX. FACE VELOCITY - 400 FPM
MAX. STATIC PRESSURE DROP, AIR SIDE - 0.30" W.G., GLYCOL SIDE - 4.0 FT.
FACE VELOCITY - 400 FPM @ 8000 CFM
FACE AREA - 20.0 ☐' MIN.
TEMPERATURES: AIR IN - 82° db/81° wb OUT - 73° db/73° wb
GLYCOL IN - 35° F OUT - 72° F

PHC-1 & 2 PREHEAT COILS, SAME AS R.C. EXCEPT FOR USE OF O.S.A.
108" × 27" DOUBLE END FEED
TEMPERATURES: AIR IN - 15° db OUT - 60° db
GLYCOL IN - 72° F OUT - 35° F

P-1 & P-2 BELL & GOSSETT 1" PR BOOSTER FOR GLYCOL SYSTEMS.
1/6 HP, 120V, 1 φ SUPPORTS SHALL BE INDEPENDENT FROM PIPING
15 GPM @ 14 FT. HEAD

3365
R. F. Marquess
NOV. 7, 1952
ROBERT F. MARQUESS

PROJ # : 22-135
DATE : 2-20-75
DESN : WDG.
DWN : ED
CHECKED: RFM.

REV. MARK: DATE: BY: DISCRIPTION:

MARQUESS ENGINEERING CO.
CONSULTING ENGINEERS
151 N 4TH SPRINGFEILD OREGON

COMPANY

SWEET HOME HIGH SCHOOL
SWIMMING POOL RENOVATION
DIST. SWEETHOME, OREGON

GEN. NOTES & TILING PLAN

1

WEATHER PROOF DISCONNECT & STATER (W/ HOA) TYPE, 2
CEU-1
3/4" CONDUIT 3#12 TW(CU)
ROUTE AS HIGH AS POSSIBLE ON INSIDE OF PARAPET WALL
FACE-OF-GUTTER TO FACE-OF-GUTTER 75.00' (+1/8"-0" TOLERANCE)
TYP. ALL POINT ACROSS POOL
A 3
C 3
DATUM EL 0"
GUTTER FLOW JET
LIFE LINE ANCHOR
GUTTER FLOW JET
CEU-2
FACE-OF-GUTTER TO FACE-OF-GUTTER 35.00' (± 1/8" TOLER.)
ADD 20A 3P TO EXISTING PANEL POOL MECH RM VERIFY SPEC 240 V 3Φ
BULKHEAD
EXISTING DRAIN REPLACE W/ JOSAM 300 S W/NIKALOY STRAINER TYPE 2
5'-9 3/4"
5'-9 3/4"
5'-9 1/2"
5'-9 1/2"
5'-9 3/4"
5'-9 3/4"
LANE LINE ANCHOR MARKER TYP. OF 10
E DIVING BOARD
WATER AGITATOR JET
REPLACE Ⓔ COVER WITH GASKETED SS. COVER PLATE SAME AS IN A 5
A 3
B 3
REMOVE Ⓔ DRAIN, GROUT FILL & PLASTER PATCH TO MATCH Ⓔ
WATER LINE DATUM EL-1 3/8"
WATER LEVEL DATUM EL-1 3/8"
DATUM EL 3 3/4"
C 3
REPLACE Ⓔ FD W/ JOSAM 300 W/ NIKALOY STRAINER
Ⓔ PITS BACK FILL & REMOVE CONC. AS REQ'D
LADDER W/CROSS-BRACE SIM TO SWIMQUIP 3351 STAINLESS STEEL
FACE-OF-GUTTER TO FACE-OF-GUTTER IS 34.92' (34'-11") X 15.96' (15'-11 1/2" ± 1/4" TOLERANCE
24X24 ACCESS COVER SEE A 5
EXISTING DRAIN
NOTE:
EXISTING GUTTER SYSTEM TO BE REMOVED & REPLACED WITH STAINLESS SYSTEM OF PADDOCK POOL EQUIPMENT. SEE SHEET 3
A 5
A 5
GUTTER FLOW JET
LIFE LINE ANCHOR
A 3
39'-0"
LADDER W/ CROSS BRACE SIM. TO SWIM QUIP 3352 STAINLESS STEEL, TYP. OF 4.
C 3
FENCE
SLOPE SLAB DOWN TO MATCH EXISTING DOOR SILL HEIGHT
BALANCING PIT BELOW SLAB SEE SHEET #5
P-1
P-2
ADD 1-20A 1P BREAKER, REPLACEMENT PANEL. POOL MECH. RM.
HV UNIT OVERHEAD SEE SHEET 5, TYPE, 2.
1/2" CONDUIT, 2-#12 TW(CU)
REMOVE & REPLACE CONC. DECK TO MATCH Ⓔ CROSSHATCHED AREA
NORTH

POOL RENOVATION PLAN 1/2
1/4" = 1'-0"

ROBERT F. MARQUESS
3365
NOV. 7, 1952
R. F. Marquess

CONSULTANT:

PROJ# : 22-135
DATE : 9/25/74
DESN : W.D.G.
DRWN : E.D.
CHECKED: W.DG.

REV. MARK:	DATE:	BY:	DESCRIPTION:
A	2-20-75	W.DG.	ADDED ALL WORK BESIDES.

MARQUESS ENGINEERING CO.
CONSULTING ENGINEERS
151 N 4TH SPRINGFIELD OREGON

SWEETHOME HIGH SCHOOL
SWIMMING POOL RENOVATIONS
DIST. 55 SWEETHOME, OREGON

POOL PLAN

SHEET
2

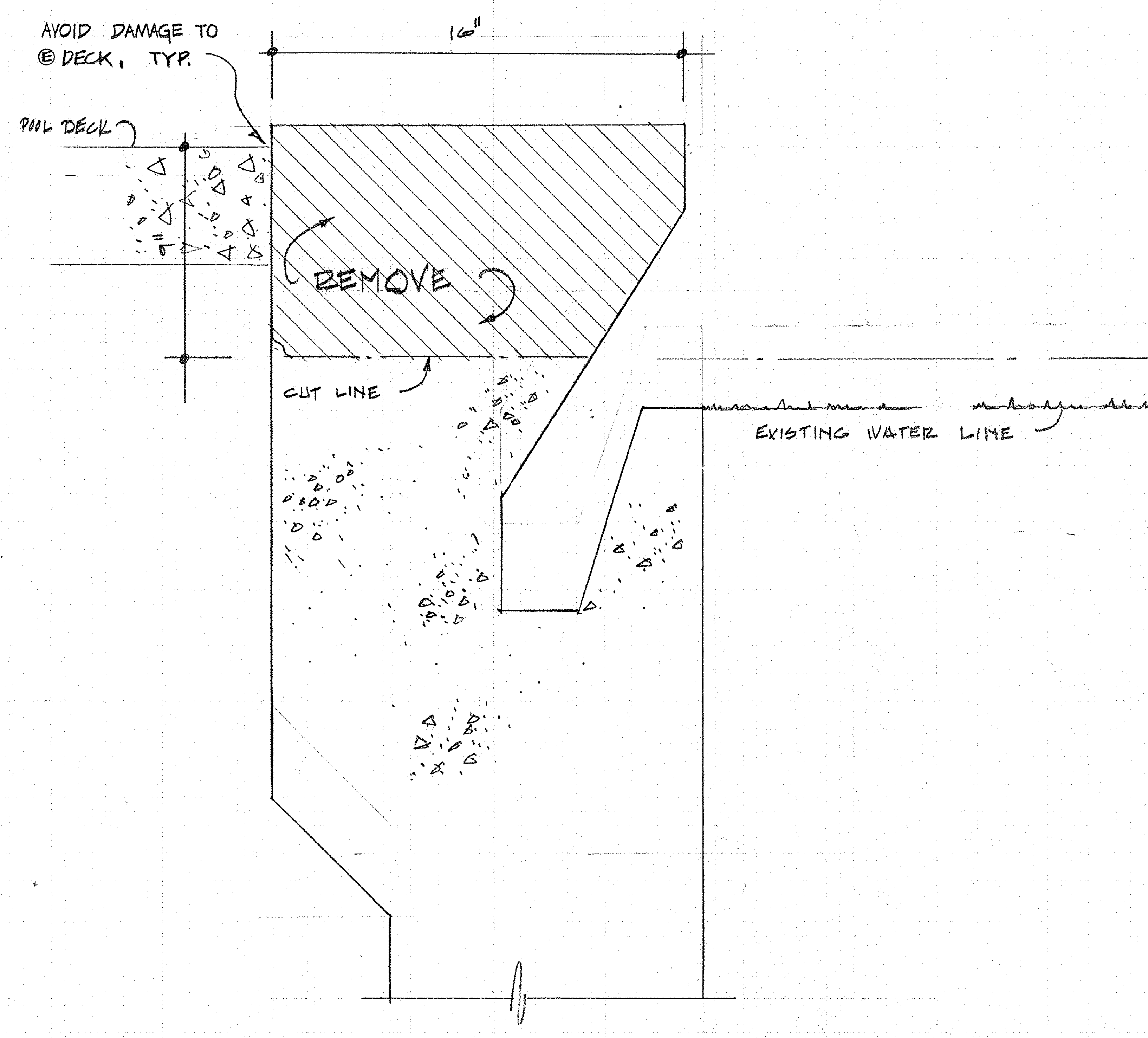
16"
AVOID DAMAGE TO
Ⓔ DECK, TYP.
POOL DECK
REMOVE
CUT LINE
EXISTING WATER LINE

EXISTING GUTTER @ SMALL POOL

A/3

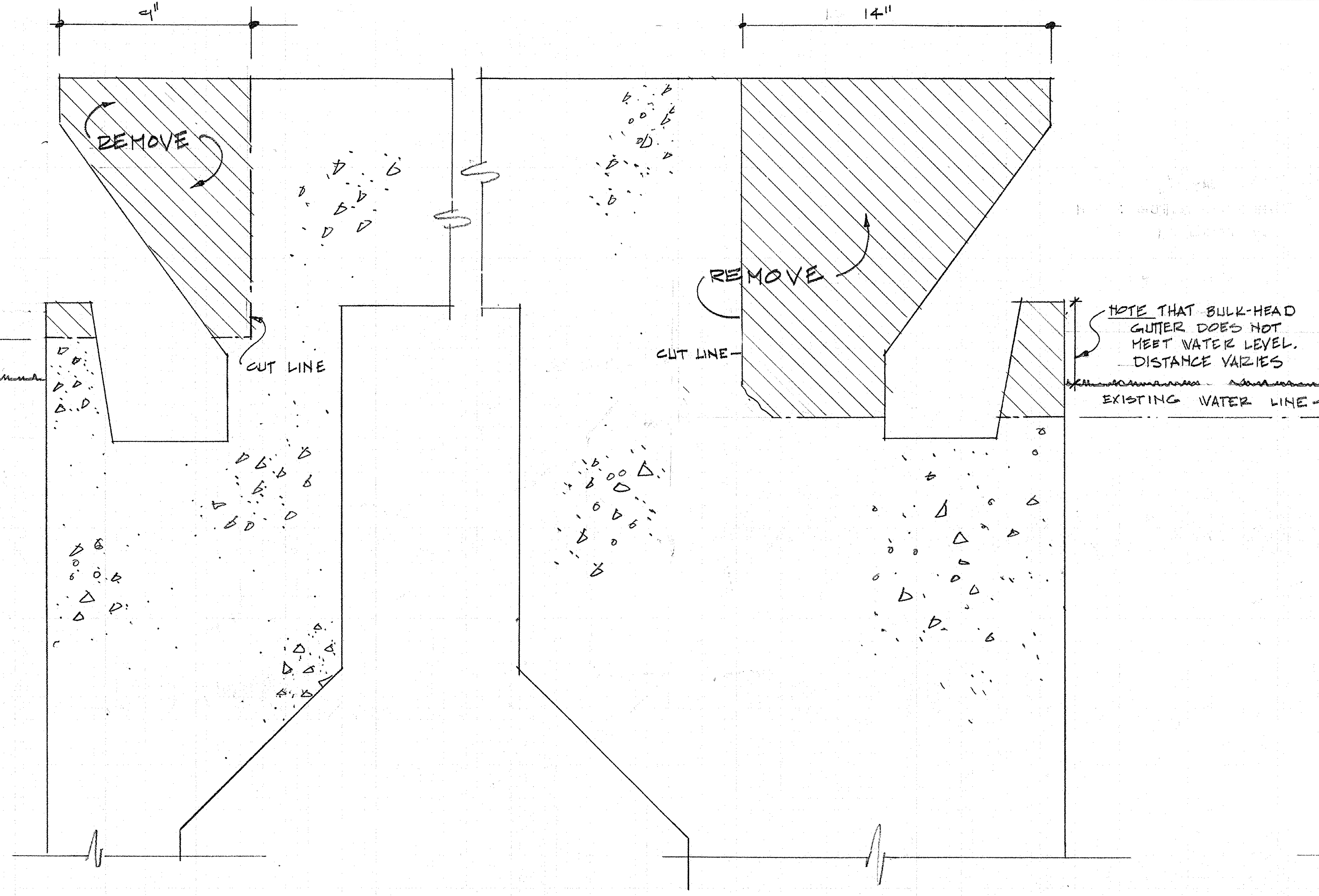
4"
14"
REMOVE
CUT LINE
REMOVE
CUT LINE
NOTE THAT BULK-HEAD
GUTTER DOES NOT
MEET WATER LEVEL.
DISTANCE VARIES
EXISTING WATER LINE

EXISTING GUTTERS @ BULK-HEAD

3"=1'-0"

B/3

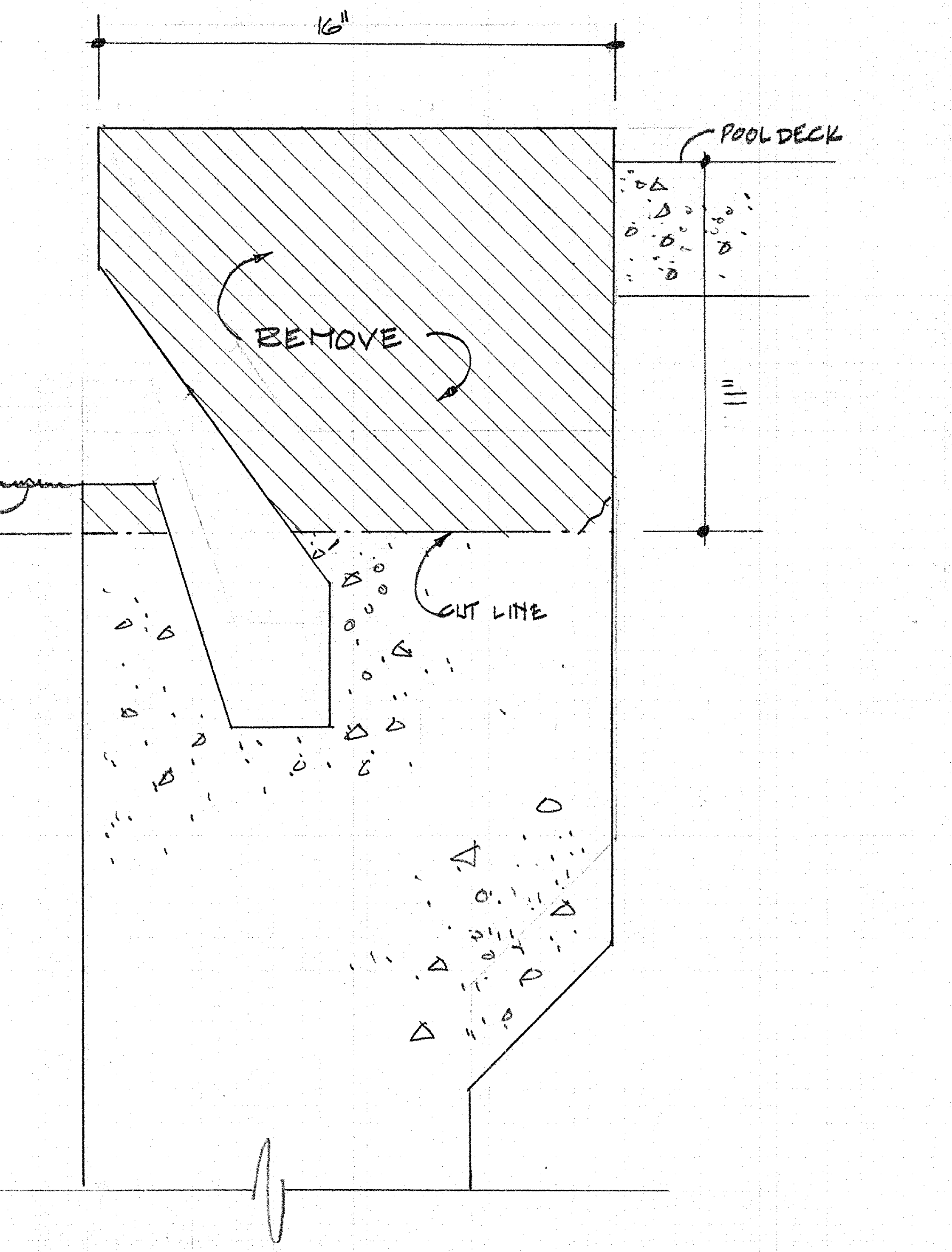
16"
POOL DECK
11"
REMOVE
CUT LINE

EXISTING GUTTER @ LARGE POOL

3"=1'-0"

C/3

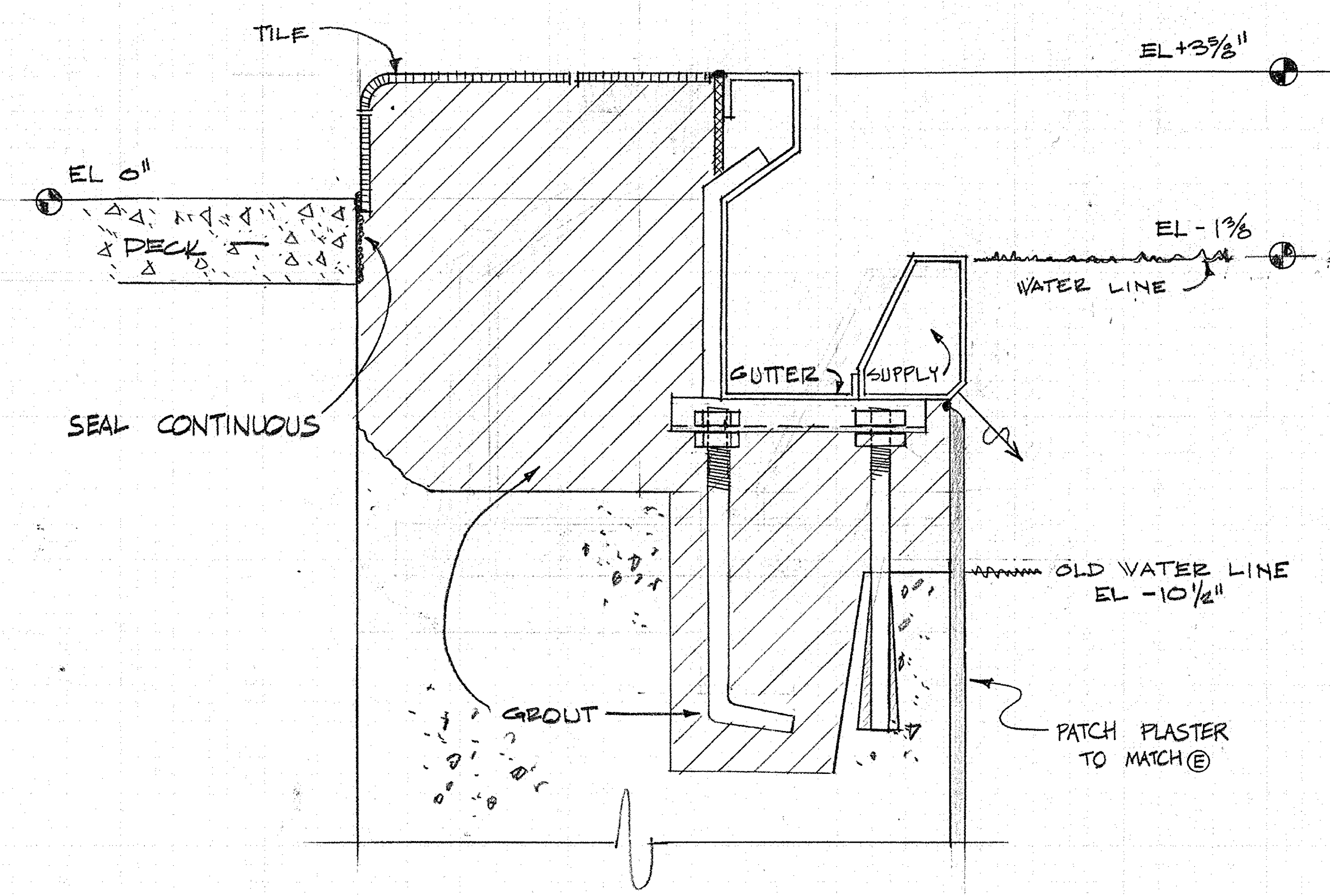
TILE
EL +3⅝"
EL 0"
DECK
EL -1⅜
WATER LINE
GUTTER
SUPPLY
SEAL CONTINUOUS
OLD WATER LINE
EL -10½"
GROUT
PATCH PLASTER
TO MATCH Ⓔ

NEW GUTTER @ SMALL POOL

3" = 1'-0"

A/3

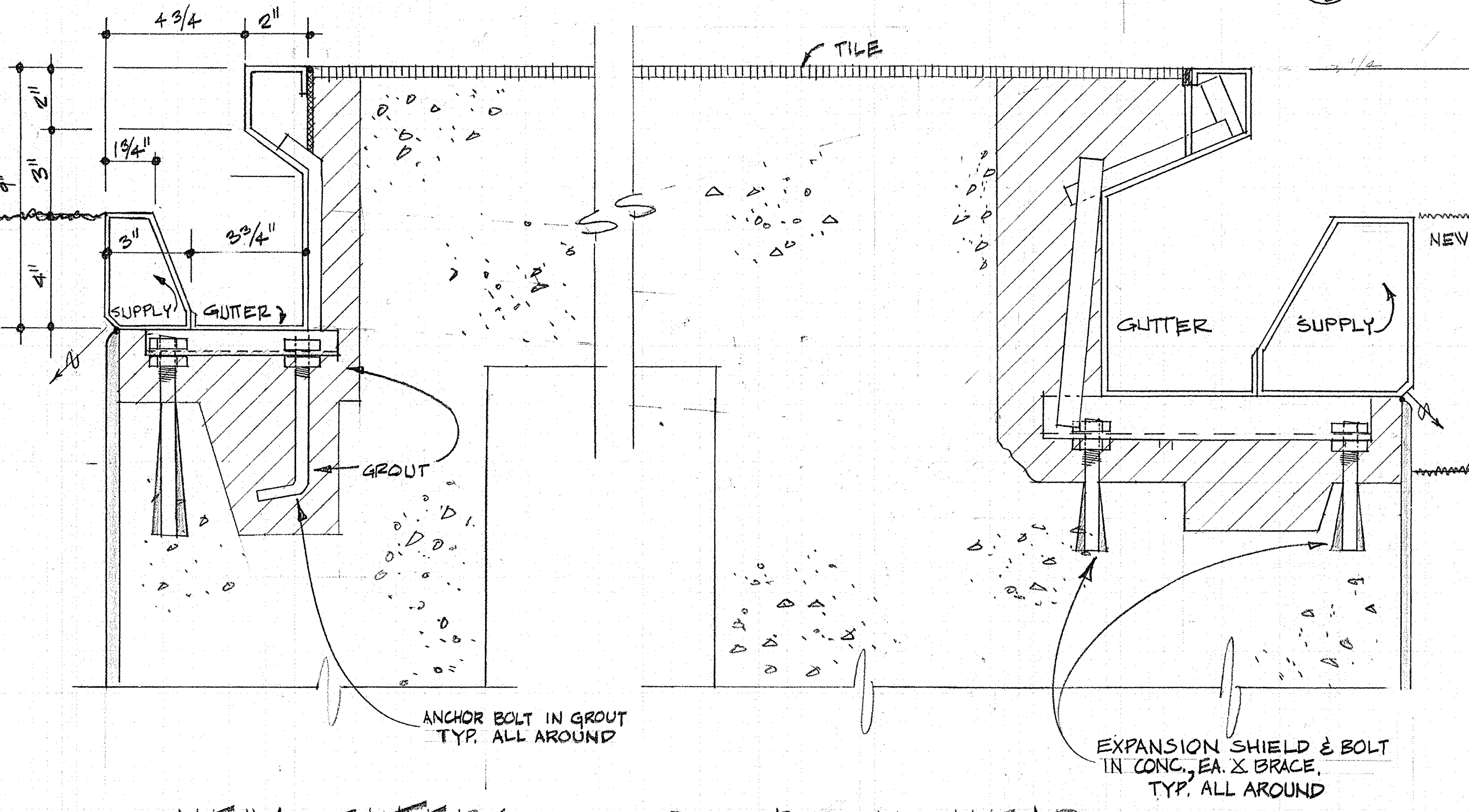
4 3/4
2"
1¾"
2"
3"
9"
4"
3"
3¾"
TILE
SUPPLY
GUTTER
GROUT
GUTTER
SUPPLY
ANCHOR BOLT IN GROUT
TYP. ALL AROUND
EXPANSION SHIELD & BOLT
IN CONC., EA. X BRACE,
TYP. ALL AROUND

NEW GUTTERS @ BULK-HEAD

3"=1'-0"

B/3

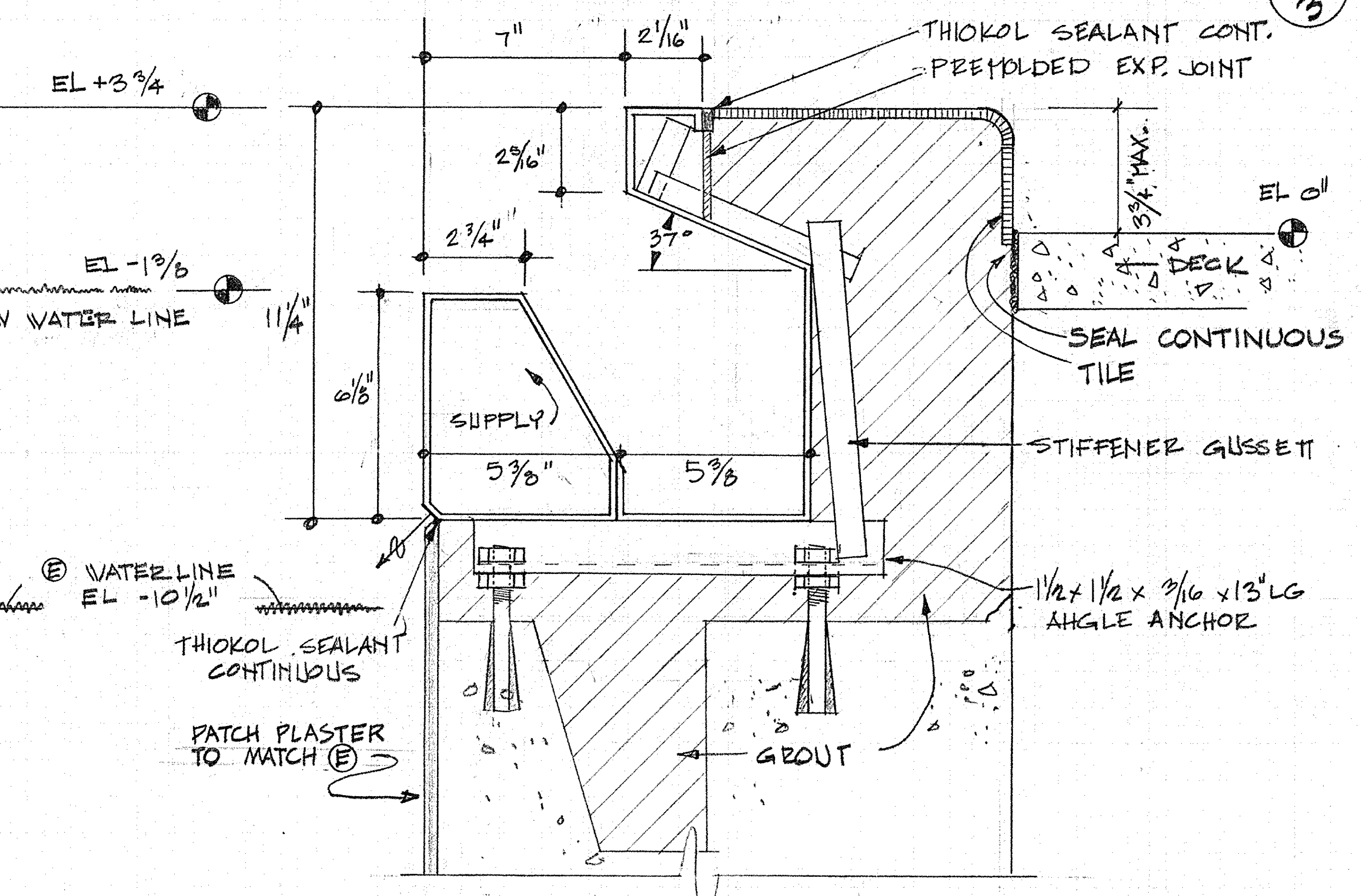
EL +3¾
EL -1⅜
NEW WATER LINE
Ⓔ WATERLINE
EL -10½"
THIOKOL SEALANT
CONTINUOUS
PATCH PLASTER
TO MATCH Ⓔ
7"
2 1/16"
2 5/16"
2¾"
37°
11¼"
6⅛"
SUPPLY
5⅜"
5⅜
THIOKOL SEALANT CONT.
PREMOLDED EXP. JOINT
3¾" MAX.
EL 0"
DECK
SEAL CONTINUOUS
TILE
STIFFENER GUSSET
1½ x 1½ x 3/16 x 13" LG
ANGLE ANCHOR
GROUT

NEW GUTTER @ LARGE POOL

3"=1'-0"

C/3

3365

ROBERT F. MARQUESS

R. F. Marquess

CONSULTANT:

PROJ# : 22-135
DATE : 9/25/74
DESN : W.DG.
DRWN : E.D.
CHECKED : W.D.G.

REV MARK:	DATE:	BY:	DESCRIPTION:
	2-20-75	WDG	

MARQUESS ENGINEERING CO.
CONSULTING ENGINEERS
151 N 4TH SPRINGFEILD OREGON
97477 (503) 747-1261

COMPANY

SWEETHOME HIGH SCHOOL
SWIMMING POOL RENOVATIONS
DIST. 55 SWEETHOME, OREGON

GUTTER INSTALLATION DETAILS

3

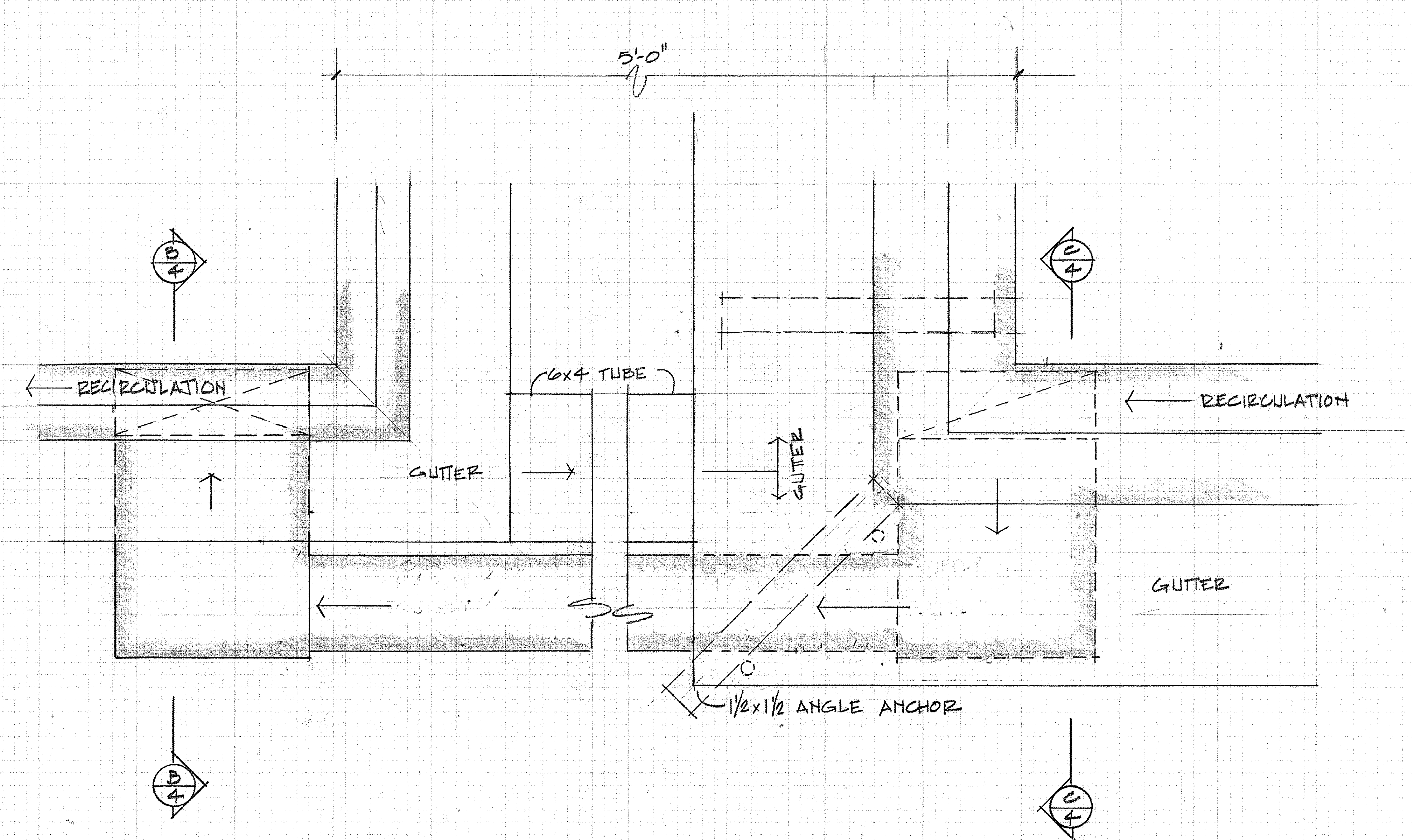
5'-0"
B 4
C 4
RECIRCULATION
6x4 TUBE
RECIRCULATION
GUTTER
GUTTER
GUTTER
1½x1½ ANGLE ANCHOR
B 4
C 4

PLAN SECTION @ BULK HEAD IFRS CONNECTION DETAILS A 4
3"=1'-0"

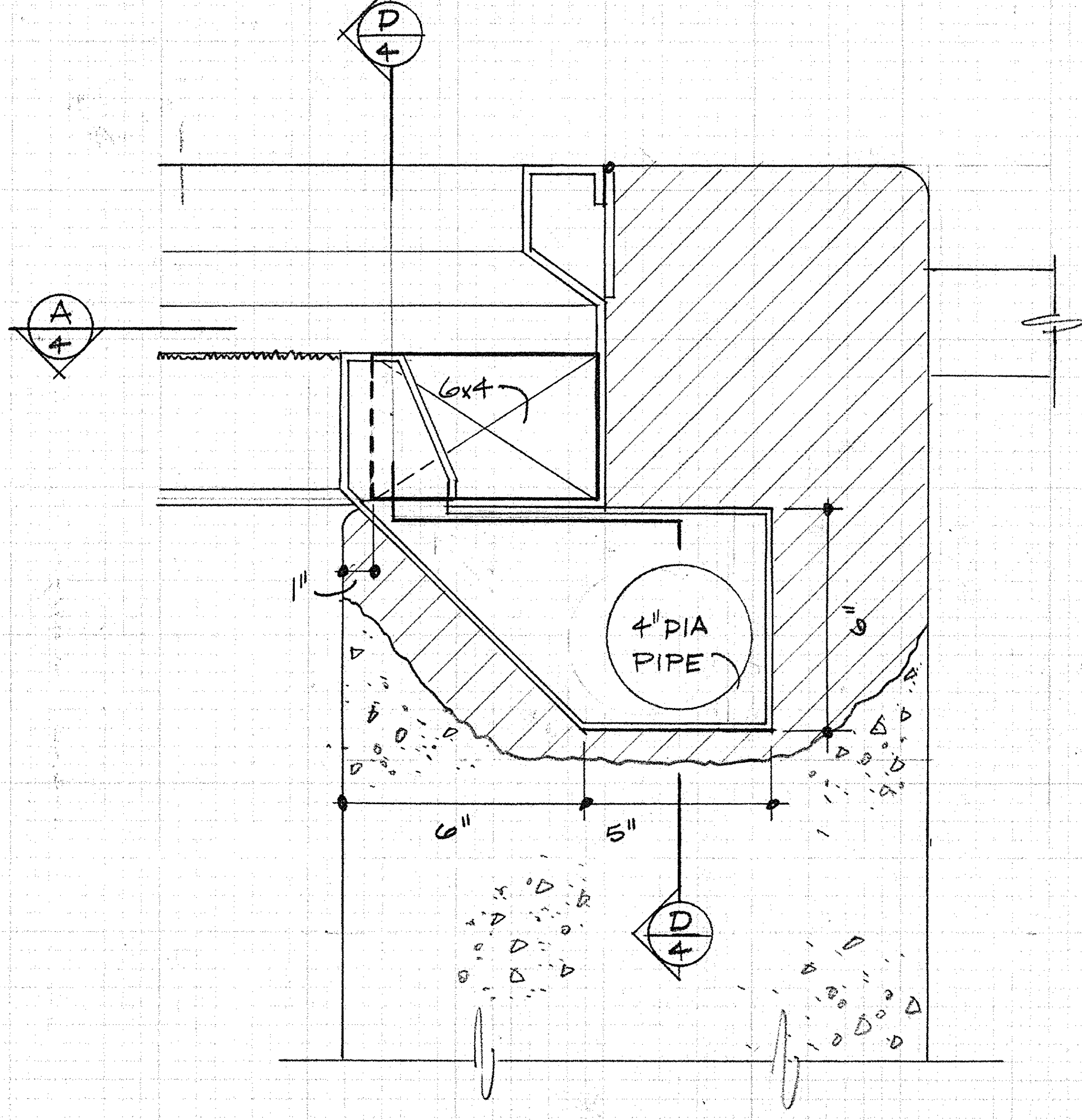
D 4
A 4
6x4
1"
4" DIA PIPE
8"
6"
5"
D 4

SMALL POOL IFRS CONNECTION B 4
3"=1'-0"

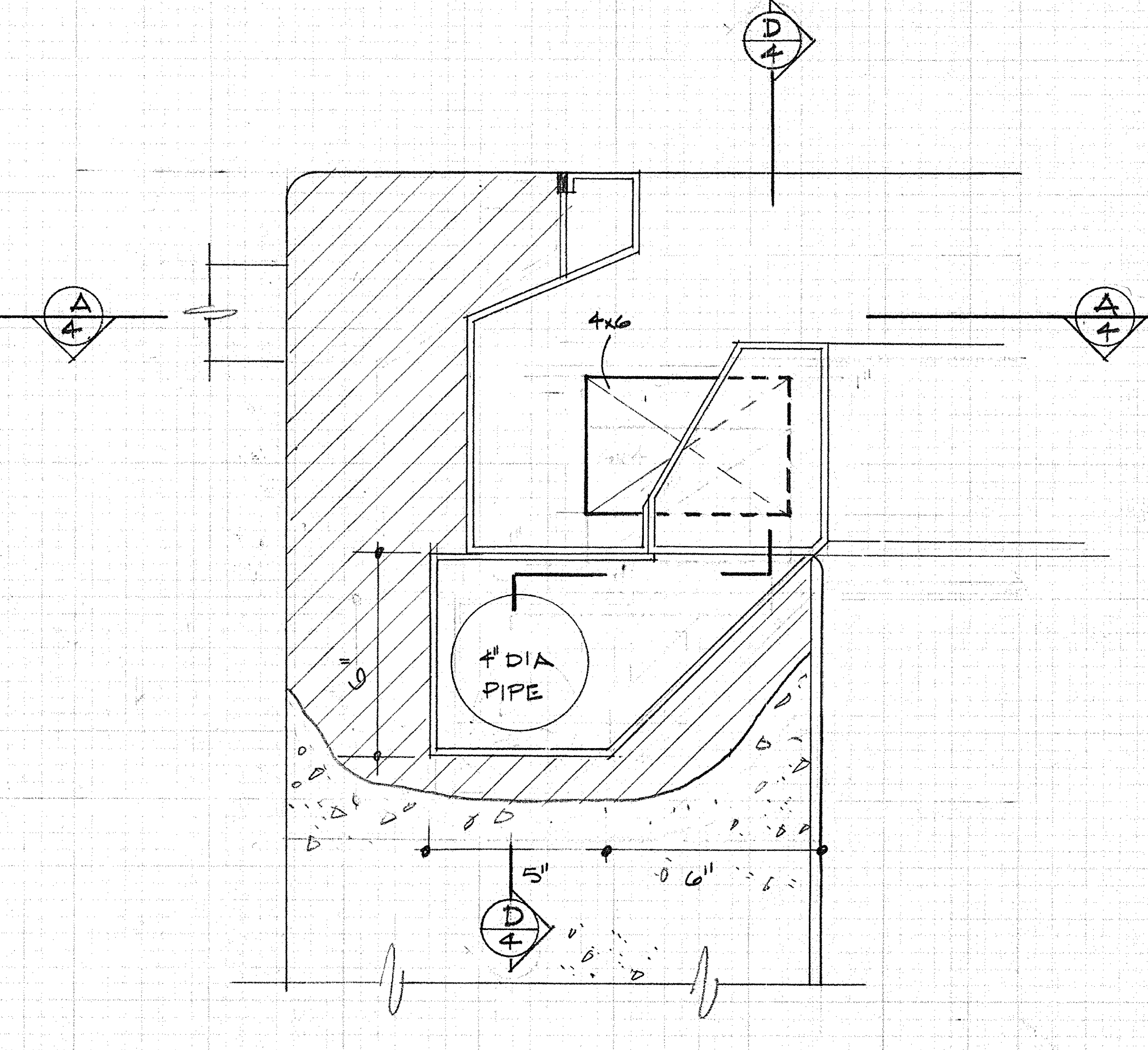
D 4
A 4
A 4
4x6
4" DIA PIPE
6"
5"
6"
D 4

LARGE POOL IFRS CONNECTION C 4
3"=1'-0"

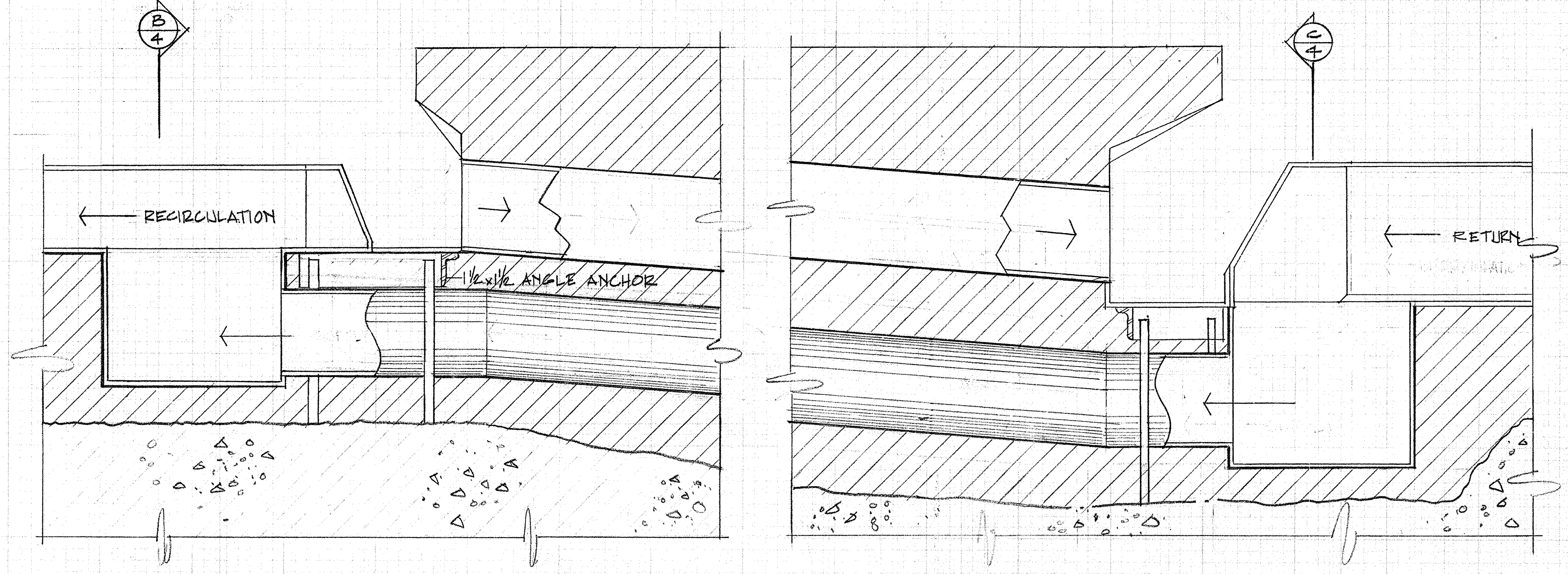
B 4
C 4
RECIRCULATION
1½x1½ ANGLE ANCHOR
RETURN

SECTION OF BULK HEAD IFRS CONNECTION DETAILS D 4
3"=1'-0"

REGISTERED PROFESSIONAL ENGINEER
3365
R. F. Marquess
OREGON
NOV. 7, 1962
ROBERT F. MARQUESS

CONSULTANT:

PROJ.# : 22-135
DATE : 9/25/74
DESN : W.DG.
DRWN : ED
CHECKED: W.DG.

REV. MARK DATE: BY: DESCRIPTION:

MARQUESS ENGINEERING CO.
CONSULTING ENGINEERS
151 N 4TH SPRINGFEILD OREGON
97477 (503) 747-1261

COMPANY

SWEET HOME HIGH SCHOOL
SWIMMING POOL RENOVATIONS
DIST. SWEETHOME OREGON

BULKHEAD IFRS CONNECTION DETAILS

4

POOL EQUIPMENT SPECS

1. PIPING : SCHED. 40 PVC PIPE & FITTINGS - SOLVENT WELD, EXCEPT C.I. BELOW BALANCING PIT. CEMENT LINED.

2. BUTTERFLY VALVES: DEMCO SERIES N.E. CAST IRON VALVE WITH 316 STAINLESS STEEL STEM & BRONZE DISC. BUNA-N SEAT. HANDLE FOR INFINITE SETTING. EPOXY PAINT EXTERIOR VALVE BODIES BELOW POOL WATE LEVEL

3. FLOAT VALVES : SWIMQUIP 13600-46 W/ CFI-A1 FLOAT CONTROL & INTERCONNECTING PIPE

4. IRON WORK : ALL IRON WORK IN BALANCING TANK OR OR EXPOSED TO POOL WATER SHALL BE STAINLESS STEEL, PAINT ALL UNFINISHED SURFACES TO SUIT. COLOR BY ARCH.

H & V. EQUIPMENT SPECS.

1. CONTROLS : H&V UNITS OPERATE CONTINUOUSLY THRU AUTO POSITIONS OF MAG. STARTER. MANUALLY CONTROLLED THRU ON-OFF POSITION. STM. COIL CONTL BY ROOM STAT; REFURBISH STATS & STM. VALVES. CEU TO OPERATE WHEN RESPECTIVE H&V UNITS OPERATES THRU EITHER HAND OR AUTO POSITION OF STARTER. MANUAL SWITCH IN POOL MECH. RM. TO OPERATE CEU INDEPENDENT OF H&V.

TO OPERATE WHEN RESPECTIVE H&V UNIT OPERATIVE. MANUAL SWITCH IN POOL MECH RM.

4. GRILLES & DIFFUSERS: EXH. GRILLES MODEL 550 STAINLESS STEEL, CARNES. SUPPLY DIFFUSERS CARNES MODEL 200 DOUBLE DEFLECTION SUPPLY REGISTER STAINLESS STEEL.

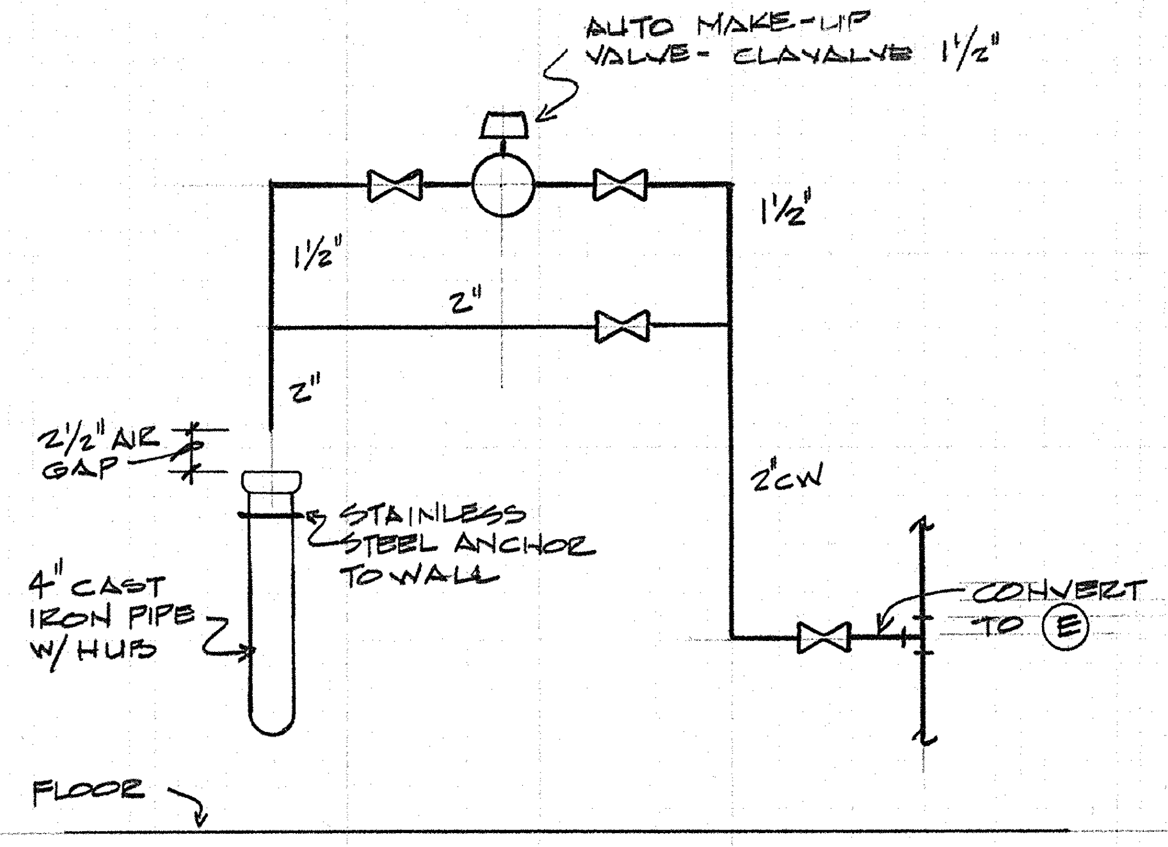
AUTO MAKE-UP VALVE - CLAYALVE 1 1/2"
1 1/2"
1 1/2"
2"
2"
2 1/2" AIR GAP
STAINLESS STEEL ANCHOR TO WALL
4" CAST IRON PIPE W/ HUB
2" CW
CONVERT TO (E)
FLOOR

AUTO MAKE-UP VALVE DETAIL

NOT TO SCALE

C
5

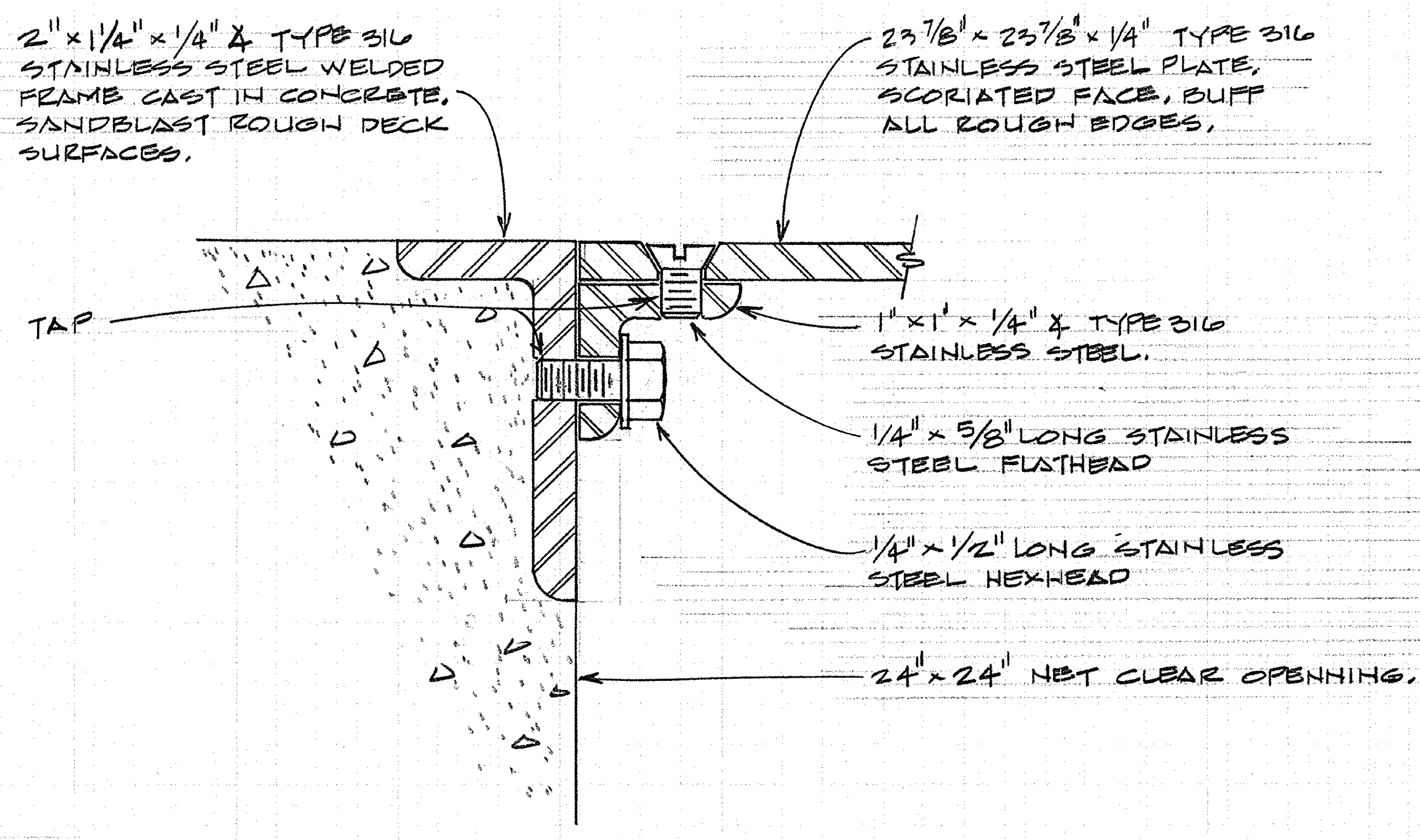
2" × 1 1/4" × 1/4" ∠ TYPE 316 STAINLESS STEEL WELDED FRAME CAST IN CONCRETE. SANDBLAST ROUGH DECK SURFACES.
23 7/8" × 23 7/8" × 1/4" TYPE 316 STAINLESS STEEL PLATE. SCORIATED FACE, BUFF ALL ROUGH EDGES.
TAP
1" × 1" × 1/4" ∠ TYPE 316 STAINLESS STEEL.
1/4" × 5/8" LONG STAINLESS STEEL FLATHEAD
1/4" × 1/2" LONG STAINLESS STEEL HEXHEAD
24" × 24" NET CLEAR OPENNING.

SURGE PIT ACCESS DETAIL

NOT TO SCALE

A
5

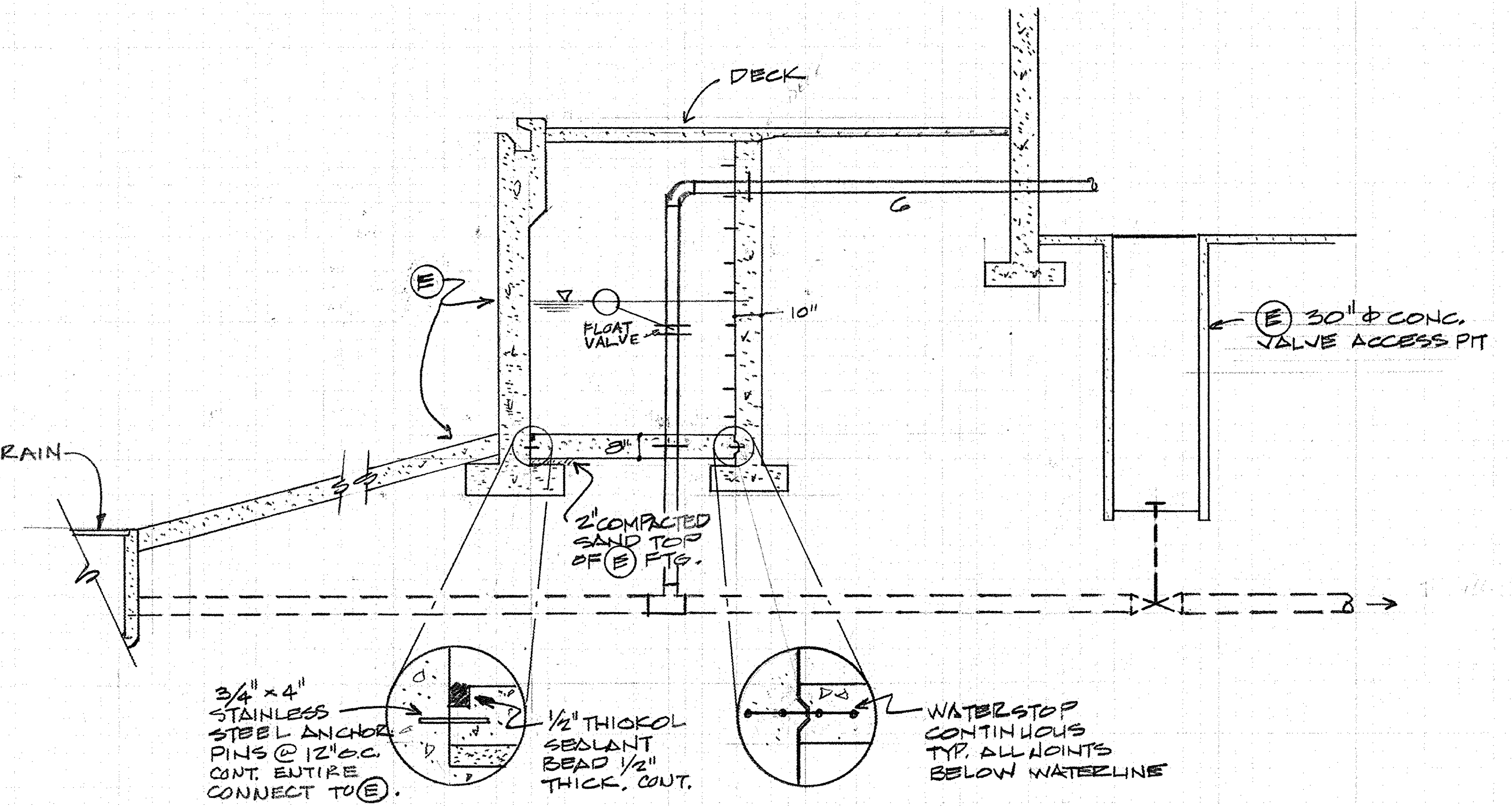
DECK
6
10"
(E)
FLOAT VALVE
8"
(E) 30" Φ CONC. VALVE ACCESS PIT
(E) MAIN DRAIN
2" COMPACTED SAND TOP OF (E) FTG.
3/4" × 4" STAINLESS STEEL ANCHOR PINS @ 12" O.C. CONT. ENTIRE CONNECT TO (E).
1/2" THIOKOL SEALANT BEAD 1/2" THICK, CONT.
WATERSTOP CONTINUOUS TYP. ALL JOINTS BELOW WATERLINE

SECTION

SCALE — 1/4" = 1'0"

B
5

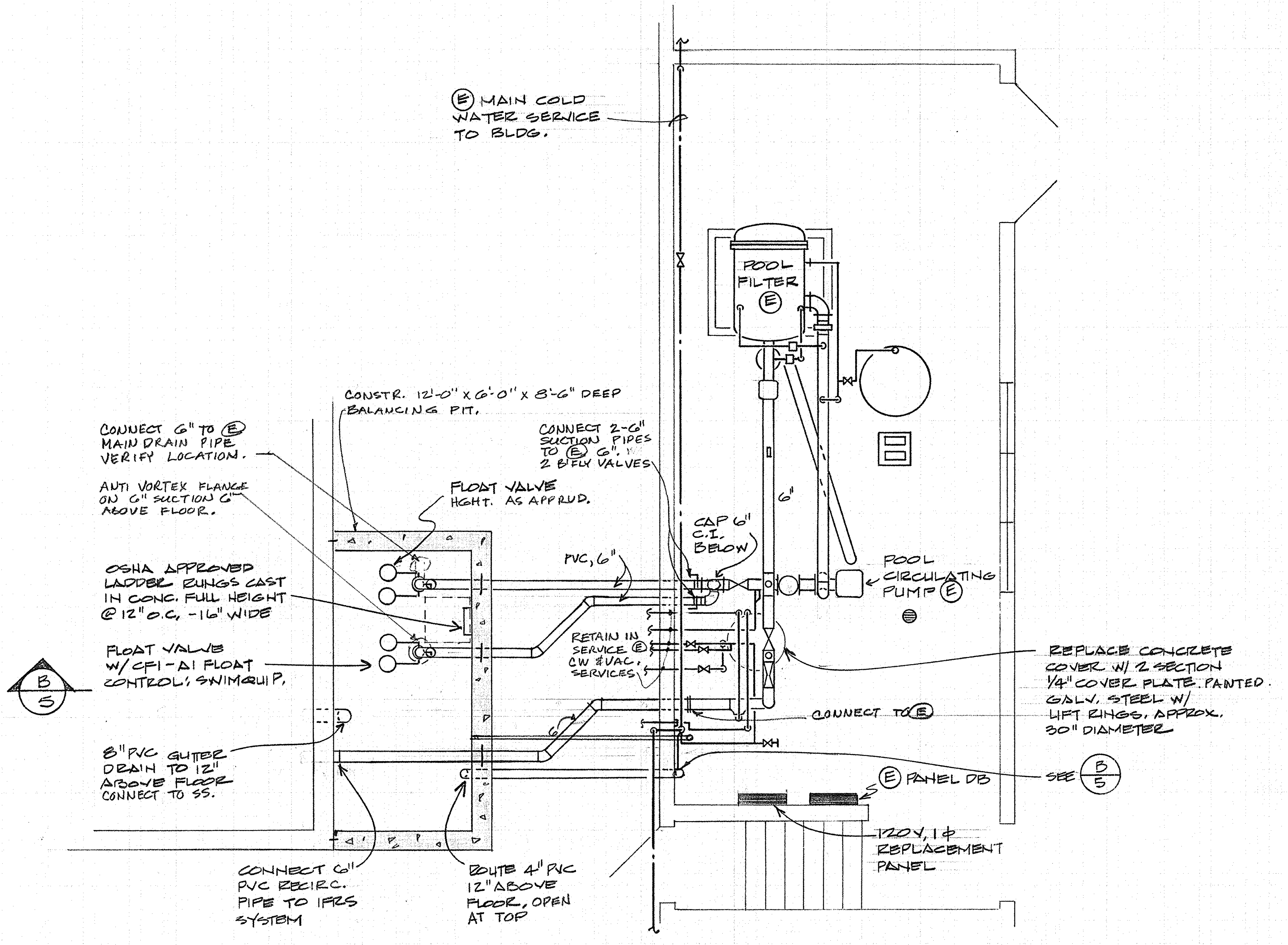
(E) MAIN COLD WATER SERVICE TO BLDG.
POOL FILTER (E)
CONSTR. 12'-0" × 6'-0" × 8'-6" DEEP BALANCING PIT.
CONNECT 6" TO (E) MAIN DRAIN PIPE VERIFY LOCATION.
ANTI VORTEX FLANGE ON 6" SUCTION 6" ABOVE FLOOR.
FLOAT VALVE HGHT. AS APPRVD.
CONNECT 2-6" SUCTION PIPES TO (E) 6". W/ 2 B'FLY VALVES
6"
CAP 6" C.I. BELOW
PVC, 6"
POOL CIRCULATING PUMP (E)
OSHA APPROVED LADDER RUNGS CAST IN CONC. FULL HEIGHT @ 12" O.C. - 16" WIDE
RETAIN IN SERVICE (E) CW & VAC. SERVICES
FLOAT VALVE W/ CFI-A1 FLOAT CONTROL; SWIMQUIP.
B
5
6"
REPLACE CONCRETE COVER W/ 2 SECTION 1/4" COVER PLATE. PAINTED. GALV. STEEL W/ LIFT RINGS. APPROX. 30" DIAMETER
CONNECT TO (E)
8" PVC GUTTER DRAIN TO 12" ABOVE FLOOR CONNECT TO SS.
(E) PANEL DB
SEE B/5
120V, 1Φ REPLACEMENT PANEL
CONNECT 6" PVC RECIRC. PIPE TO IFRS SYSTEM
ROUTE 4" PVC 12" ABOVE FLOOR, OPEN AT TOP

BALANCING TANK
POOL MECHANICAL ROOM

SCALE 1/4" = 1'-0"

1
5

3365
R. F. Marquess
NOV. 7, 1952
ROBERT F. MARQUESS

PROJ #: 22-135
DATE : 2-20-75
DESN : W.D.G.
DRWN : FFC
CHECKED: RFM.

REV. MARK: DATE: BY: DISCRIPTION:

MARQUESS ENGINEERING CO.
CONSULTING ENGINEERS
151 N. 4TH SPRINGFEILD, OREGON

COMPANY

SWEETHOME HIGH SCHOOL
SWIMMING POOL RENOVATION
DIST. 55 SWEETHOME, OREGON.

5

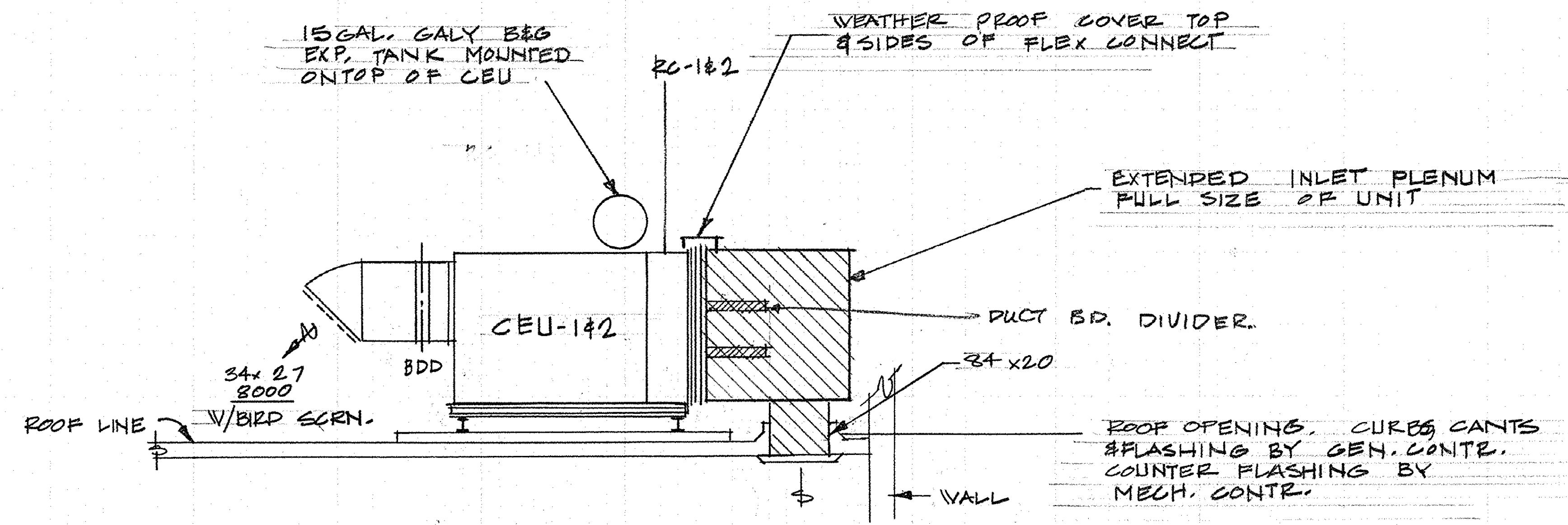
15 GAL. GALV. B&G EXP. TANK MOUNTED ONTOP OF CEU
RC-1&2
WEATHER PROOF COVER TOP & SIDES OF FLEX CONNECT
EXTENDED INLET PLENUM FULL SIZE OF UNIT
CEU-1&2
DUCT BD. DIVIDER
34x20
34x27 8000
BDD
ROOF LINE
W/BIRD SCRN.
ROOF OPENING, CURBS CANTS & FLASHING BY GEN. CONTR. COUNTER FLASHING BY MECH. CONTR.
WALL

SECTION CEU INSTL. (TYP OF 2 UNITS) A/6

1/4"=1'-0"

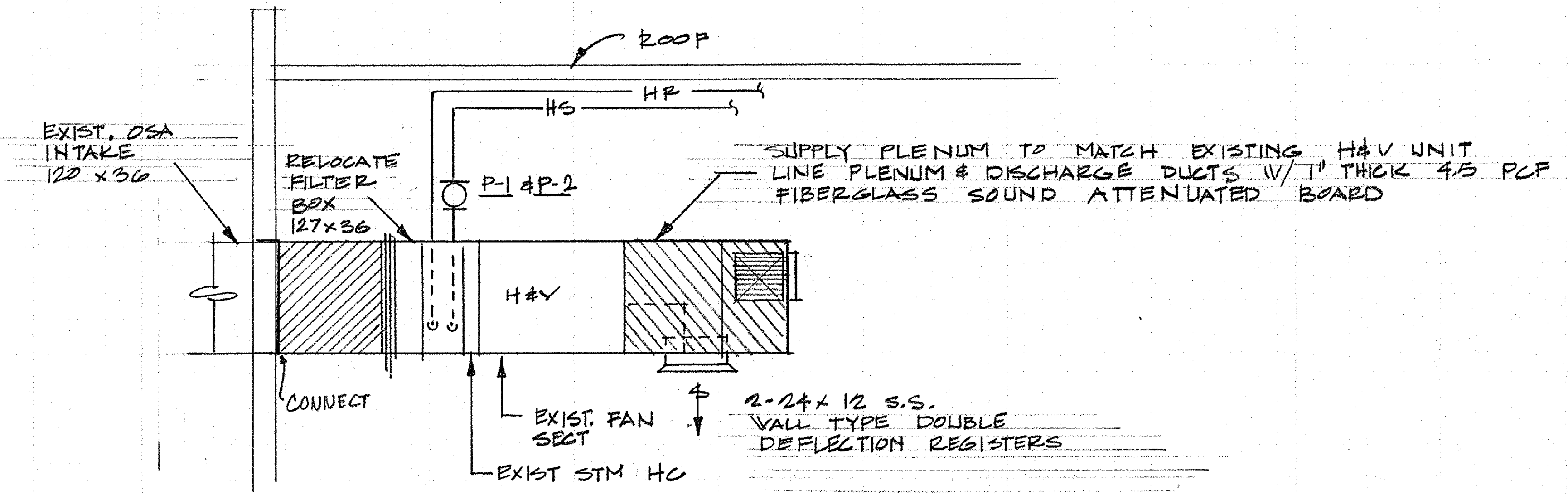
ROOF
HR
HS
EXIST. OSA INTAKE 120 x 36
RELOCATE FILTER BOX 127x36
P-1 & P-2
H&V
SUPPLY PLENUM TO MATCH EXISTING H&V UNIT LINE PLENUM & DISCHARGE DUCTS W/ 1" THICK 4.5 PCF FIBERGLASS SOUND ATTENUATED BOARD
CONNECT
EXIST. FAN SECT
EXIST STM HC
2-24x12 S.S. WALL TYPE DOUBLE DEFLECTION REGISTERS

SECTION SUPPLY SYSTEM INSTL. (TYP. OF 2 UNITS) B/6

1/4"=1'-0"

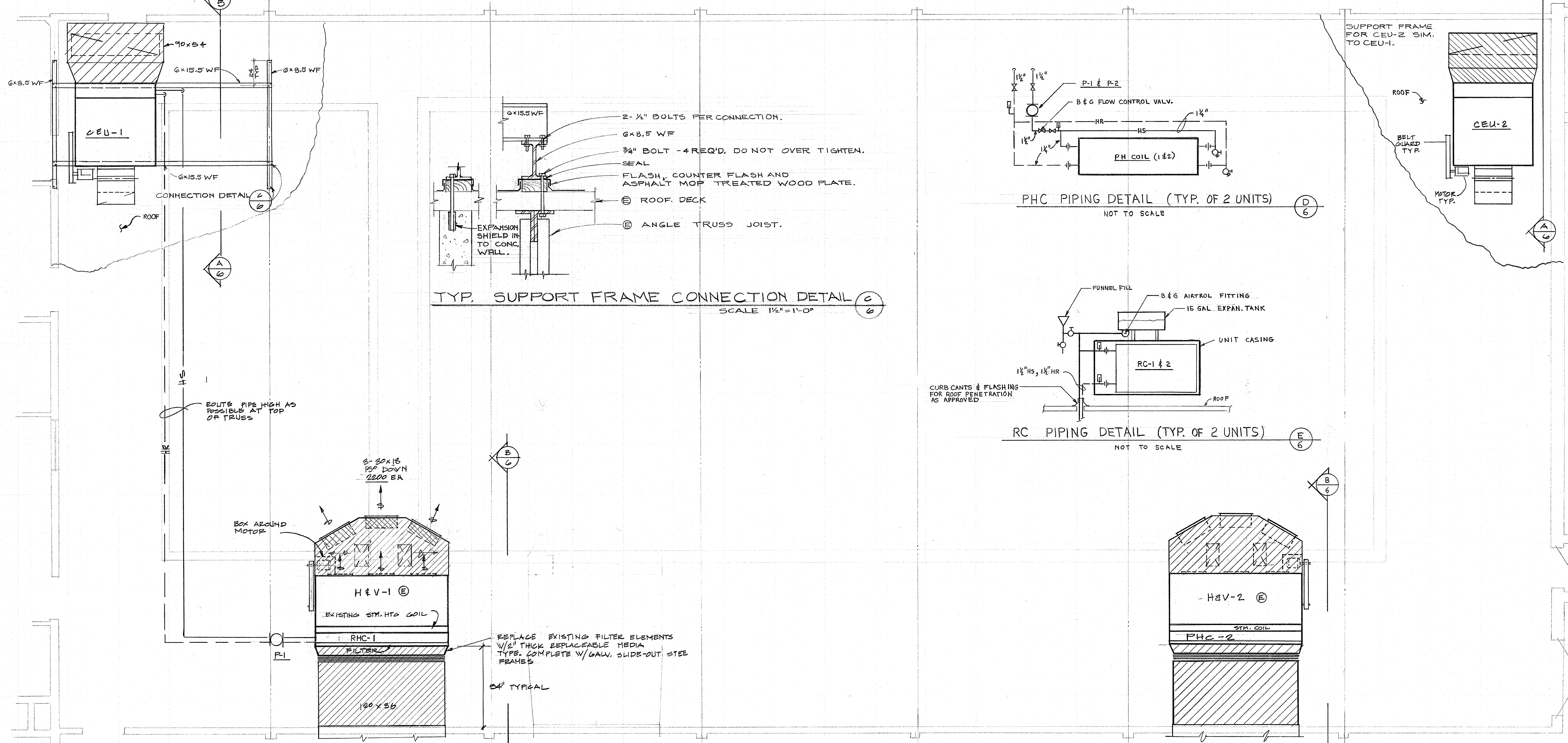
A/5
A/6
B/6
90x54
6x15.5 WF
6x8.5 WF
24
CEU-1
CONNECTION DETAIL C/6
ROOF
HS
HR
ROUTE PIPE HIGH AS POSSIBLE AT TOP OF TRUSS
3-30x18 15° DOWN 2200 EA
BOX AROUND MOTOR
H&V-1 Ⓔ
EXISTING STM. HTG COIL
RHC-1
FILTER
P-1
120 x 36
REPLACE EXISTING FILTER ELEMENTS W/2" THICK REPLACEABLE MEDIA TYPE. COMPLETE W/GALV. SLIDE-OUT STEE FRAMES
54" TYPICAL
6x15.5WF
2-1/2" BOLTS PER CONNECTION.
6x8.5 WF
3/4" BOLT - 4 REQ'D. DO NOT OVER TIGHTEN.
SEAL
FLASH, COUNTER FLASH AND ASPHALT MOP TREATED WOOD PLATE.
Ⓔ ROOF. DECK
Ⓔ ANGLE TRUSS JOIST.
EXPANSION SHIELD IN TO CONC. WALL.
1 1/4" 1 1/4"
P-1 & P-2
B&G FLOW CONTROL VALV.
HR
HS
PH COIL (1&2)
FUNNEL FILL
B&G AIRTROL FITTING
15 GAL EXPAN. TANK
UNIT CASING
RC-1 & 2
1 1/4"HS, 1 1/4"HR
CURB CANTS & FLASHING FOR ROOF PENETRATION AS APPROVED
ROOF
SUPPORT FRAME FOR CEU-2 SIM. TO CEU-1.
BELT GUARD TYP.
CEU-2
MOTOR TYP.
H&V-2 Ⓔ
STM. COIL
PHC-2

TYP. SUPPORT FRAME CONNECTION DETAIL C/6

SCALE 1 1/2"=1'-0"

PHC PIPING DETAIL (TYP. OF 2 UNITS) D/6

NOT TO SCALE

RC PIPING DETAIL (TYP. OF 2 UNITS) E/6

NOT TO SCALE

H&V PLAN 1/6

1/4"=1'-0"

REGISTERED PROFESSIONAL ENGINEER 3365 OREGON NOV. 7, 1952 ROBERT F. MARQUESS

R. F. Marquess

PROJ # : 22-135
DATE : 2-20-75
DESN : WDG
DWG : ED, JD.
CHECKED: RFM.

REV. MARK: DATE: BY: DISCRIPTION:

MARQUESS ENGINEERING CO.
CONSULTING ENGINEERS
151 N 4TH SPRINGFEILD OREGON

COMPANY

SWEETHOME HIGH SCHOOL
SWIMMING POOL RENOVATION
DIST. 55 SWEETHOME, OREGON

6

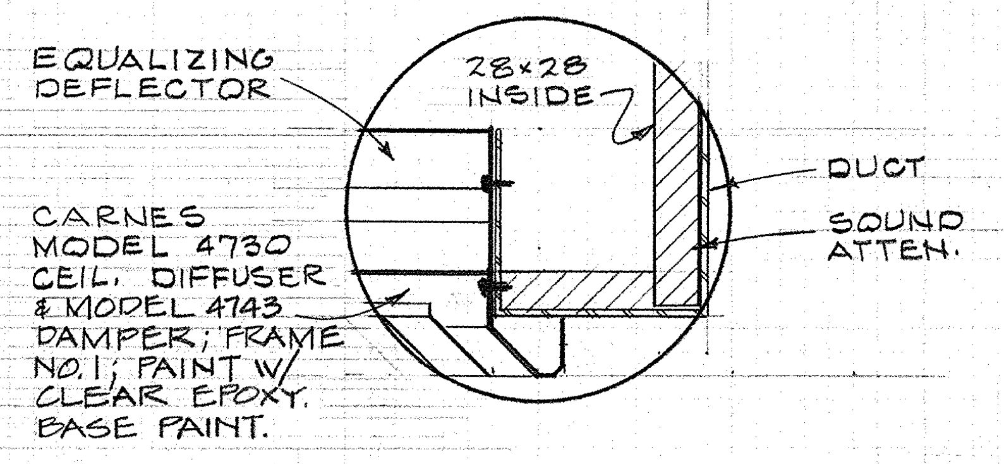
EQUALIZING DEFLECTOR
28×28 INSIDE
CARNES MODEL 4730 CEIL. DIFFUSER & MODEL 4743 DAMPER; FRAME NO.1; PAINT W/ CLEAR EPOXY BASE PAINT.
DUCT
SOUND ATTEN.

NOTE: TYP. OF (2)

TYP. DIFFUSER INSTALL. DET. 4 6-R

3"=1'-0"

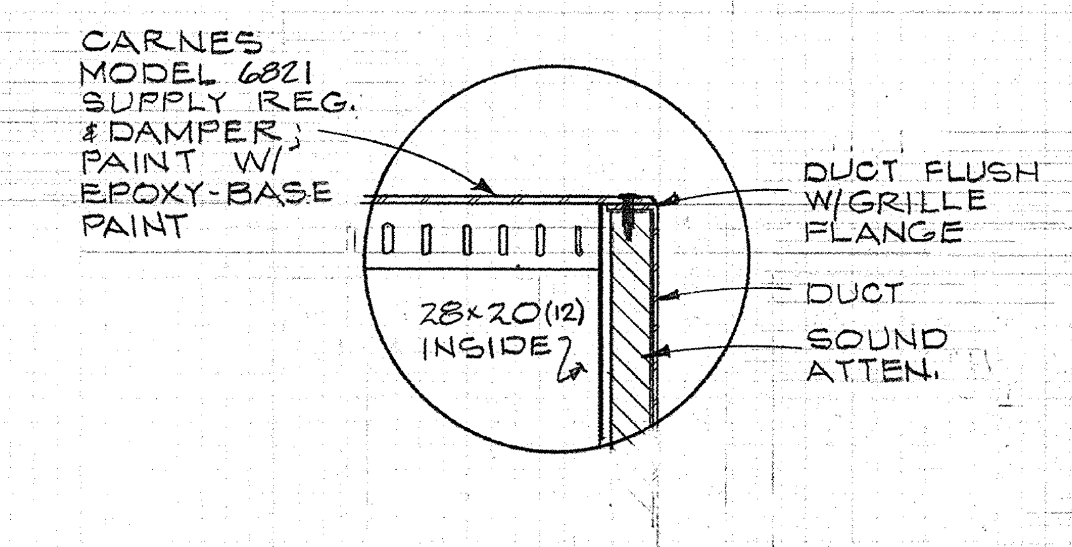
CARNES MODEL 6821 SUPPLY REG. & DAMPER; PAINT W/ EPOXY-BASE PAINT
DUCT FLUSH W/GRILLE FLANGE
DUCT
28×20(12) INSIDE
SOUND ATTEN.

NOTE: TYP. OF (6)

TYP. REGISTER INSTALL. DET. 3 6-R

3"=1'-0"

NOTE:
PROVIDE BAKELITE NAMEPLATE SIGN READING:
VENT AIR FROM GLYCOL CIRCUITS & RECHARGE WITH GLYCOL IF HEAT RECOVERY IS NIL ACCORDING TO THERMOMETER READINGS.

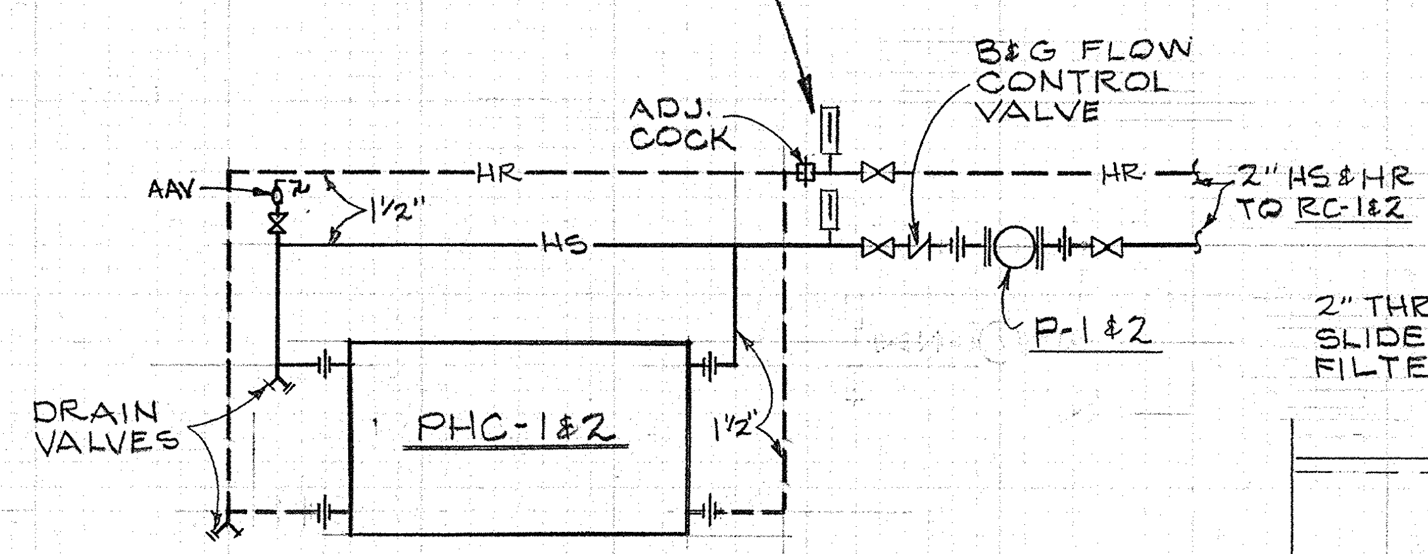
AAV
1½"
HR
HS
ADJ. COCK
B&G FLOW CONTROL VALVE
2" HS & HR TO RC-1&2
P-1 & 2
DRAIN VALVES
PHC-1&2
1½"

NOTE: TYP. OF (2) COILS

PHC PIPING DETAIL 1 6-R

NOT-TO-SCALE

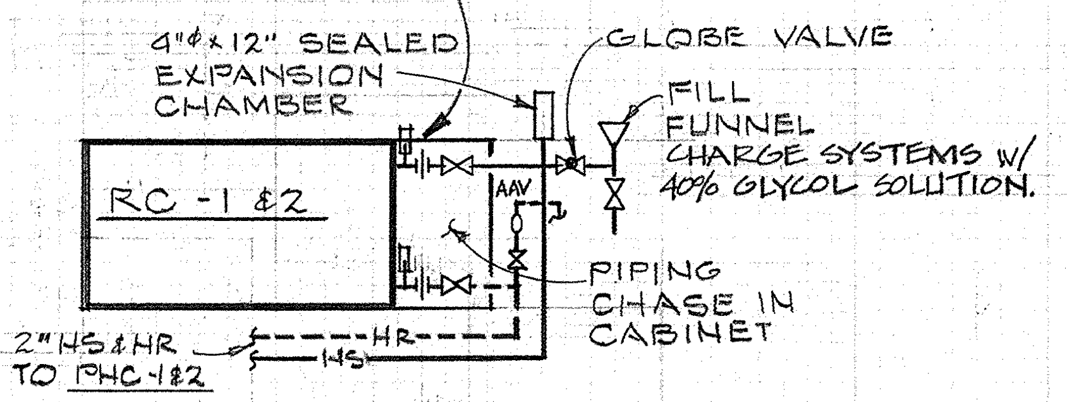
4"φ×12" SEALED EXPANSION CHAMBER
GLOBE VALVE
FILL FUNNEL
CHARGE SYSTEMS W/ 40% GLYCOL SOLUTION.
AAV
RC-1 & 2
PIPING CHASE IN CABINET
2" HS & HR TO PHC-1&2
HR
HS

NOTE: TYP. OF (2) COILS

RC PIPING DETAIL 2 6-R

NOT-TO-SCALE

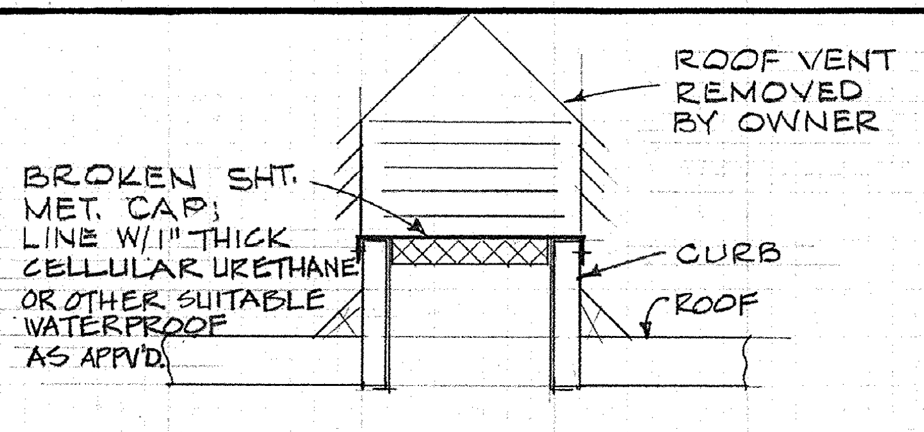
ROOF VENT REMOVED BY OWNER
BROKEN SHT. MET. CAP; LINE W/ 1" THICK CELLULAR URETHANE OR OTHER SUITABLE WATERPROOF AS APP'VD.
CURB
ROOF

NOTE: TYP. OF (6) ROOF VENTS

TYPICAL ROOF VENT SEAL DETAIL 6 6-R

NOT-TO-SCALE

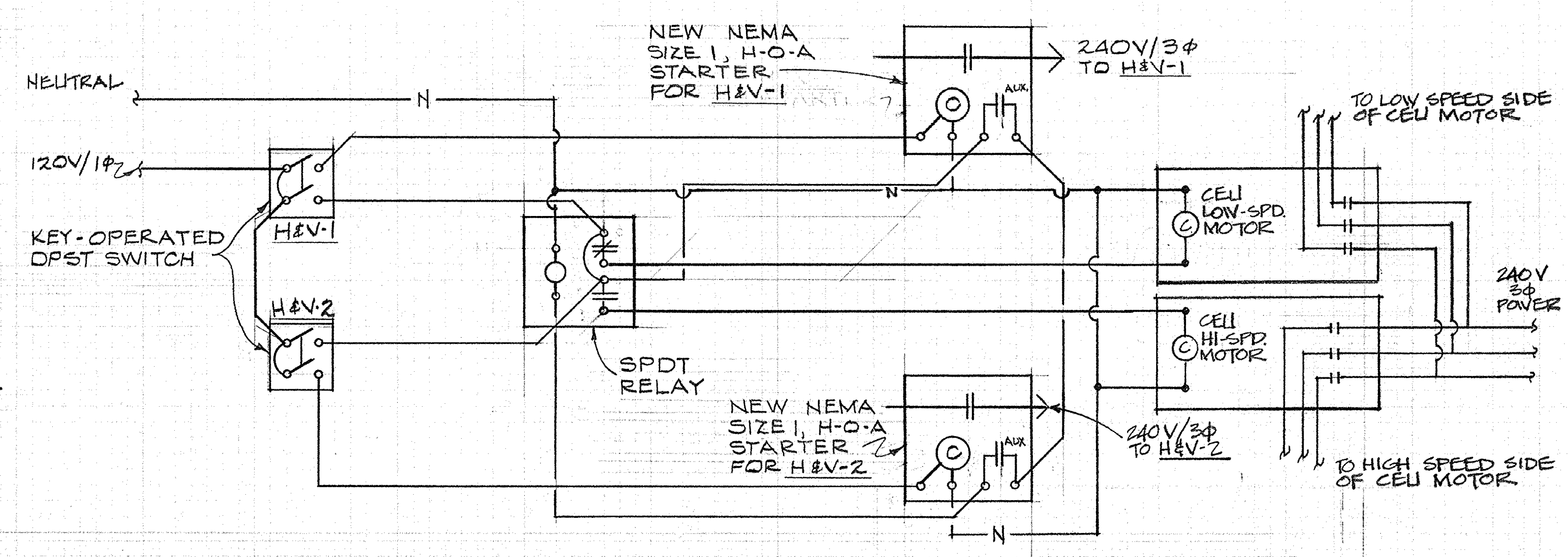
NEW NEMA SIZE 1, H-O-A STARTER FOR H&V-1
240V/3φ TO H&V-1
NEUTRAL
N
120V/1φ
KEY-OPERATED DPST SWITCH
H&V-1
H&V-2
N
TO LOW SPEED SIDE OF CEU MOTOR
CEU LOW-SPD. MOTOR
240V 3φ POWER
CEU HI-SPD. MOTOR
SPDT RELAY
NEW NEMA SIZE 1, H-O-A STARTER FOR H&V-2
240V/3φ TO H&V-2
TO HIGH SPEED SIDE OF CEU MOTOR
N
AUX.
AUX.

FAN WIRING DIAGRAM 5 6-R

NOT-TO-SCALE

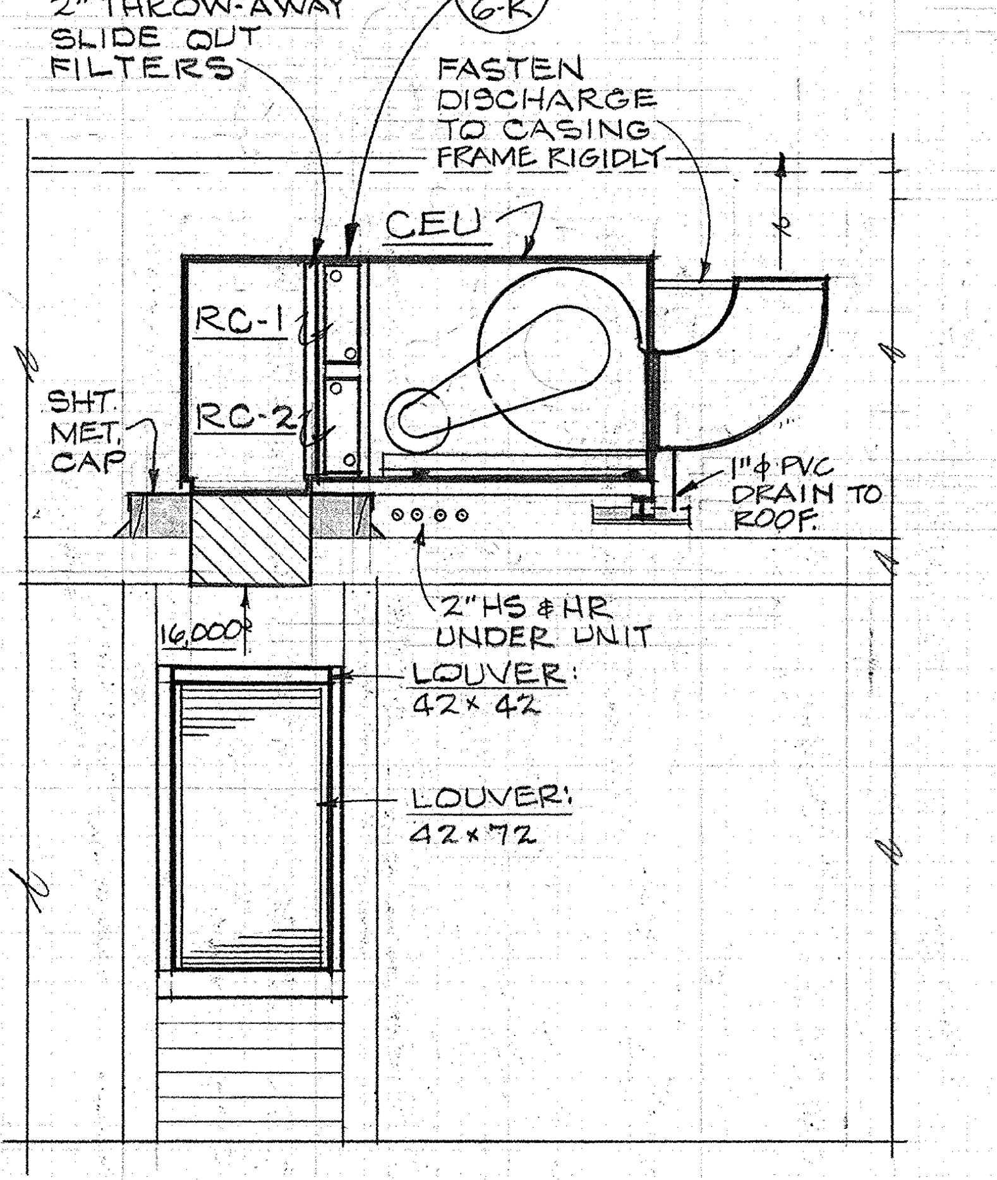
2" THROW-AWAY SLIDE OUT FILTERS
2 6-R
FASTEN DISCHARGE TO CASING FRAME RIGIDLY
CEU
RC-1
RC-2
SHT. MET. CAP
1"φ PVC DRAIN TO ROOF.
2" HS & HR UNDER UNIT
16,000
LOUVER: 42×42
LOUVER: 42×72

SECTION B 6-R

1/4"=1'-0"

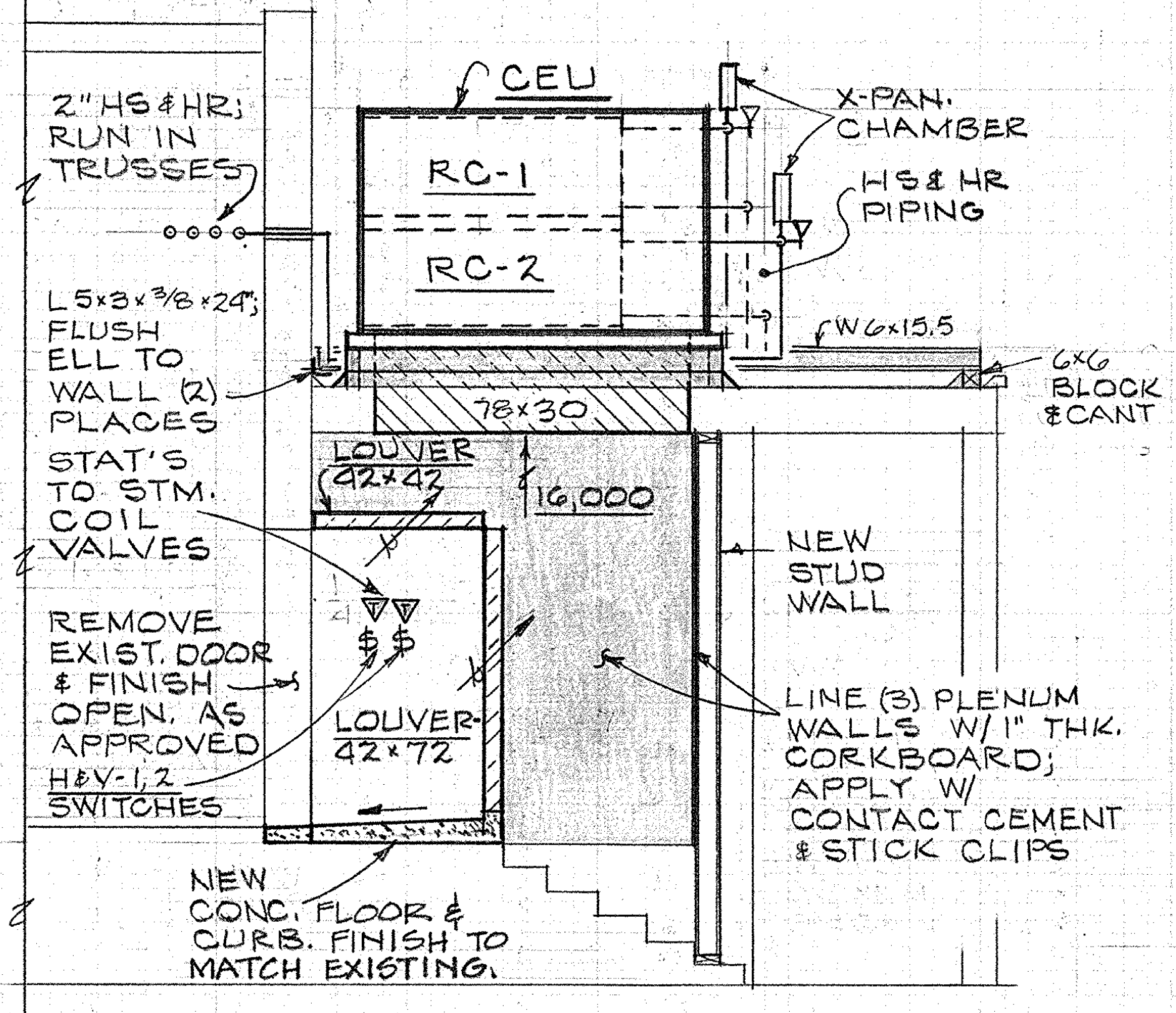
CEU
2" HS & HR; RUN IN TRUSSES
X-PAN. CHAMBER
HS & HR PIPING
RC-1
RC-2
W6×15.5
6×6 BLOCK & CANT
L5×3×3/8×24"; FLUSH ELL TO WALL (2) PLACES
78×30
LOUVER 42×42
16,000
STAT'S TO STM. COIL VALVES
NEW STUD WALL
REMOVE EXIST. DOOR & FINISH OPEN. AS APPROVED
H&V-1,2 SWITCHES
LOUVER 42×72
LINE (3) PLENUM WALLS W/ 1" THK. CORKBOARD; APPLY W/ CONTACT CEMENT & STICK CLIPS
NEW CONC. FLOOR & CURB. FINISH TO MATCH EXISTING.

SECTION A 6-R

1/4"=1'-0"

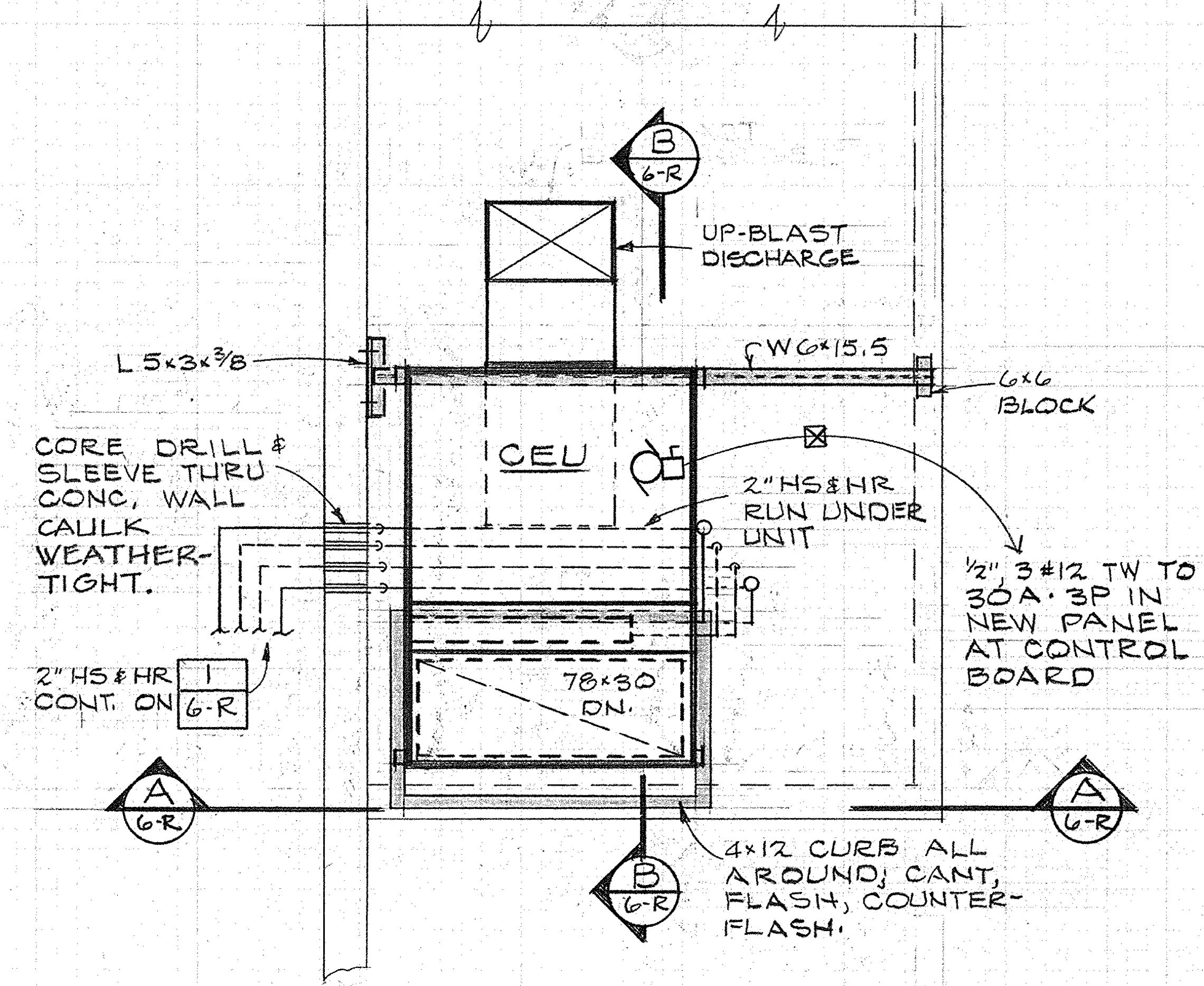
B 6-R
UP-BLAST DISCHARGE
L5×3×3/8
W6×15.5
6×6 BLOCK
CORE DRILL & SLEEVE THRU CONC. WALL CAULK WEATHER-TIGHT.
CEU
2" HS & HR RUN UNDER UNIT
1/2", 3#12 TW TO 30A-3P IN NEW PANEL AT CONTROL BOARD
2" HS & HR CONT. ON 1 6-R
78×30 DN.
A 6-R
A 6-R
B 6-R
4×12 CURB ALL AROUND; CANT, FLASH, COUNTER-FLASH.

H&V ROOF PLAN 2 6-R

1/4"=1'-0"

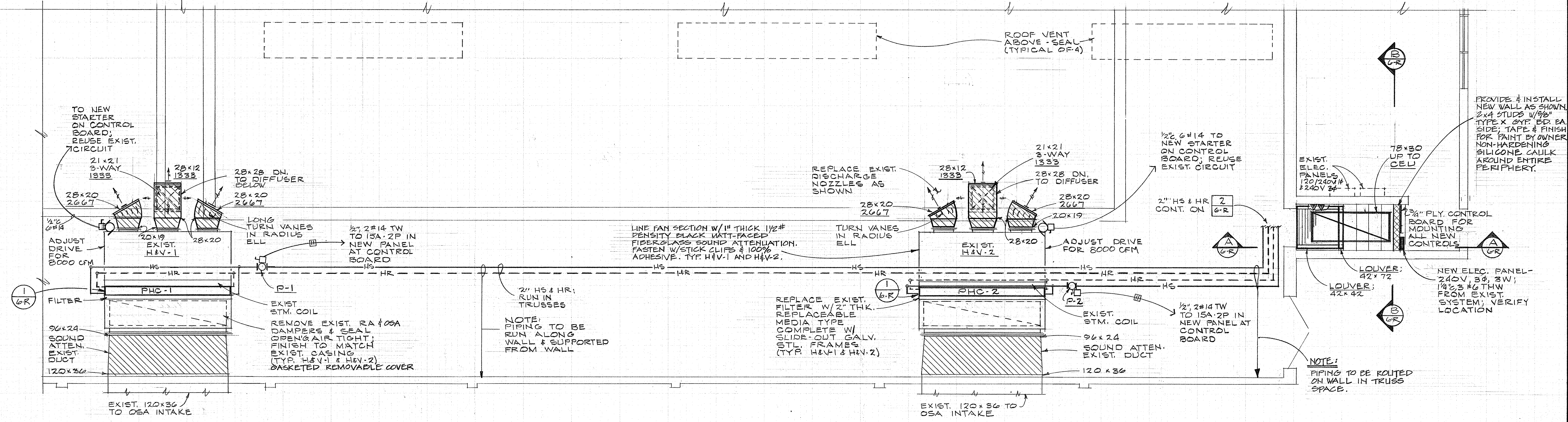
ROOF VENT ABOVE - SEAL (TYPICAL OF 4)
B 6-R
TO NEW STARTER ON CONTROL BOARD; REUSE EXIST. CIRCUIT
21×21 3-WAY 1333
28×12 1333
28×28 DN. TO DIFFUSER BELOW
28×20 2667
28×20 2667
1/2"C 6#14
LONG TURN VANES IN RADIUS ELL
20×19
28×20
ADJUST DRIVE FOR 8000 CFM
EXIST. H&V-1
1/2", 2#14 TW TO 15A-2P IN NEW PANEL AT CONTROL BOARD
HS
HR
1 6-R
PHC-1
P-1
FILTER
EXIST STM. COIL
REMOVE EXIST. RA & OSA DAMPERS & SEAL OPEN'G AIR TIGHT; FINISH TO MATCH EXIST. CASING (TYP. H&V-1 & H&V-2) GASKETED REMOVABLE COVER
96×24
SOUND ATTEN. EXIST. DUCT
120×36
EXIST. 120×36 TO OSA INTAKE
2" HS & HR; RUN IN TRUSSES
NOTE: PIPING TO BE RUN ALONG WALL & SUPPORTED FROM WALL
LINE FAN SECTION W/ 1" THICK 1 1/2# DENSITY BLACK MATT-FACED FIBERGLASS SOUND ATTENUATION. FASTEN W/STICK CLIPS & 100% ADHESIVE. TYP. H&V-1 AND H&V-2.
REPLACE EXIST. DISCHARGE NOZZLES AS SHOWN
28×12 1333
21×21 3-WAY 1333
28×28 DN. TO DIFFUSER
28×20 2667
28×20 2667
20×19
TURN VANES IN RADIUS ELL
28×20
EXIST. H&V-2
ADJUST DRIVE FOR 8000 CFM
1/2"C, 6#14 TO NEW STARTER ON CONTROL BOARD; REUSE EXIST. CIRCUIT
2" HS & HR CONT. ON 2 6-R
A 6-R
1 6-R
PHC-2
P-2
REPLACE EXIST. FILTER W/ 2" THK. REPLACEABLE MEDIA TYPE COMPLETE W/ SLIDE-OUT GALV. STL. FRAMES (TYP. H&V-1 & H&V-2)
EXIST. STM. COIL
1/2", 2#14 TW TO 15A-2P IN NEW PANEL AT CONTROL BOARD
96×24
SOUND ATTEN. EXIST. DUCT
120×36
EXIST. 120×36 TO OSA INTAKE
NOTE: PIPING TO BE ROUTED ON WALL IN TRUSS SPACE.
EXIST. ELEC. PANELS 120/240V 1φ & 240V 3φ
78×30 UP TO CEU
PROVIDE & INSTALL NEW WALL AS SHOWN. 2×4 STUDS W/5/8" TYPE X GYP. BD. EA. SIDE; TAPE & FINISH FOR PAINT BY OWNER, NON-HARDENING SILICONE CAULK AROUND ENTIRE PERIPHERY.
3/4" PLY. CONTROL BOARD FOR MOUNTING ALL NEW CONTROLS
A 6-R
LOUVER; 42×72
LOUVER; 42×42
NEW ELEC. PANEL-240V, 3φ, 3W; 1¼"C, 3 #6 THW FROM EXIST. SYSTEM; VERIFY LOCATION
B 6-R

H&V FLOOR PLAN 1 6-R

1/4"=1'-0"

REGISTERED PROFESSIONAL ENGINEER
3365
OREGON
NOV. 7, 1962
ROBERT F. MARQUESS

R. F. Marquess

DESIGN: WDG DATE: 6/16/75
DRWN: KJH PROJ.: 22-135
CH'K: RFM SCALE: NOTED

MARK	DATE	BY	DESCRIPTION
△	6/16/75	KJH	GEN. REVISIONS-ENTIRE SHEET

SWEETHOME HIGH SCHOOL
SWIMMING POOL RENOVATIONS
DIST. 55 SWEETHOME, ORE.

POOL H&V REVISIONS

MARQUESS ENGINEERING CO.
CONSULTING ENGINEERS
151 NORTH FOURTH STREET
SPRINGFIELD, OREGON - PH. 747-1261

5

NOTES:

1. LIGHT LINES REPRESENT EXISTING EQUIPMENT, DUCTWORK, & PIPING. HEAVY LINES REPRESENT WORK UNDER THIS CONTRACT.
2. SLOPE STEAM MAIN AND CONDENSATE RETURN MAIN AND RISERS ¼" PER 10'. SLOPE STEAM RISERS ½" PER FOOT. SLOPE ALL PIPING IN DIRECTION SHOWN.
3. SUSPEND ALL THREE CABINET UNIT HEATERS FROM EXISTING PERLINS IN A SIMILAR MANNER AS SHOWN IN SECTION 2.
4. SEE SPECIFICATIONS FOR DETAILED DESCRIPTION OF CAR EXHAUST SYSTEM. ALL 4"Φ SHEETMETAL DUCTS DOWN TO 11' FROM FLOOR.
5. REBALANCE Ⓔ AIR SYSTEM WHERE SHOWN.

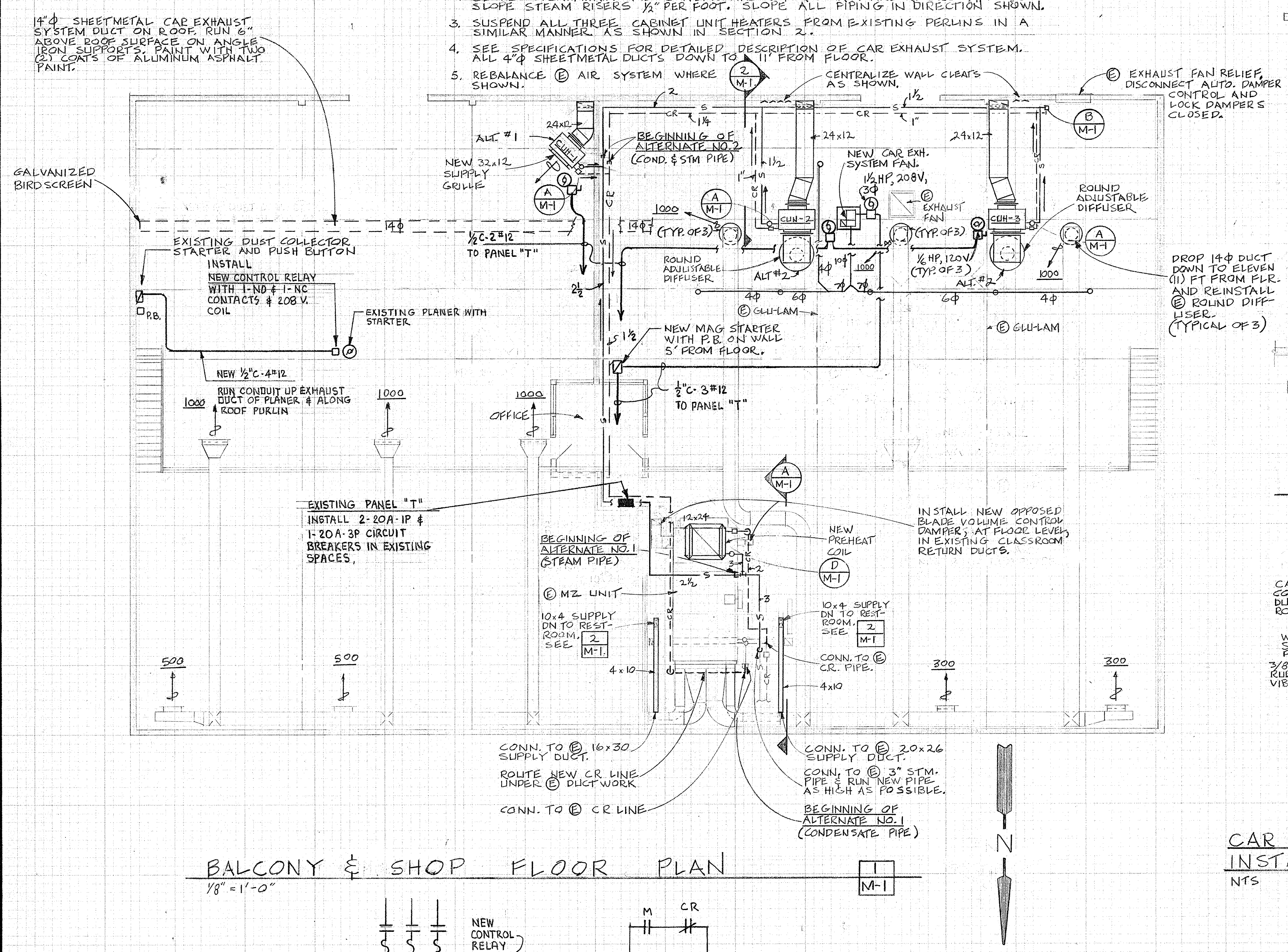
14Φ SHEETMETAL CAR EXHAUST SYSTEM DUCT ON ROOF. RUN 6" ABOVE ROOF SURFACE ON ANGLE IRON SUPPORTS. PAINT WITH TWO (2) COATS OF ALUMINUM ASPHALT PAINT.
Ⓔ EXHAUST FAN RELIEF. DISCONNECT AUTO. DAMPER CONTROL AND LOCK DAMPERS CLOSED.
CENTRALIZE WALL CLEATS AS SHOWN.
GALVANIZED BIRDSCREEN
ALT. #1
24x12
NEW 32x12 SUPPLY GRILLE
BEGINNING OF ALTERNATE NO. 2 (COND. & STM PIPE)
24x12
NEW CAR EXH. SYSTEM FAN. 1½ HP, 208V, 3Φ
Ⓔ EXHAUST FAN
24x12
ROUND ADJUSTABLE DIFFUSER
CUH-1
CUH-2
CUH-3
1000
14Φ
(TYP. OF 3)
ROUND ADJUSTABLE DIFFUSER
(TYP. OF 3)
⅙ HP, 120V (TYP. OF 3)
ALT. #2
ALT. #2
4Φ
6Φ
6Φ
4Φ
DROP 14Φ DUCT DOWN TO ELEVEN (11) FT FROM FLR. AND REINSTALL Ⓔ ROUND DIFFUSER. (TYPICAL OF 3)
EXISTING DUST COLLECTOR STARTER AND PUSH BUTTON INSTALL NEW CONTROL RELAY WITH 1-NO & 1-NC CONTACTS & 208 V. COIL
½"C-2#12 TO PANEL "T"
P.B.
EXISTING PLANER WITH STARTER
NEW ½"C-4#12
RUN CONDUIT UP EXHAUST DUCT OF PLANER & ALONG ROOF PURLIN
Ⓔ GLU-LAM
NEW MAG STARTER WITH P.B. ON WALL 5' FROM FLOOR.
Ⓔ GLU-LAM
½"C-3#12 TO PANEL "T"
1000
1000
1000
OFFICE
EXISTING PANEL "T" INSTALL 2-20A-1P & 1-20A-3P CIRCUIT BREAKERS IN EXISTING SPACES.
BEGINNING OF ALTERNATE NO. 1 (STEAM PIPE)
Ⓔ MZ UNIT
12x24
NEW PREHEAT COIL
INSTALL NEW OPPOSED BLADE VOLUME CONTROL DAMPER, AT FLOOR LEVEL, IN EXISTING CLASSROOM RETURN DUCTS.
10x4 SUPPLY DN TO RESTROOM. SEE 2/M-1
10x4 SUPPLY DN TO RESTROOM. SEE 2/M-1
4x10
4x10
CONN. TO Ⓔ CR. PIPE.
500
500
300
300
CONN. TO Ⓔ 16x30 SUPPLY DUCT.
ROUTE NEW CR LINE UNDER Ⓔ DUCTWORK
CONN. TO Ⓔ CR LINE
CONN. TO Ⓔ 20x26 SUPPLY DUCT.
CONN. TO Ⓔ 3" STM. PIPE & RUN NEW PIPE AS HIGH AS POSSIBLE.
BEGINNING OF ALTERNATE NO. 1 (CONDENSATE PIPE)
S
CR
2
1¼
1½
1"
2½
1½
A/M-1
B/M-1
2/M-1

N

BALCONY & SHOP FLOOR PLAN

⅛" = 1'-0"

1/M-1

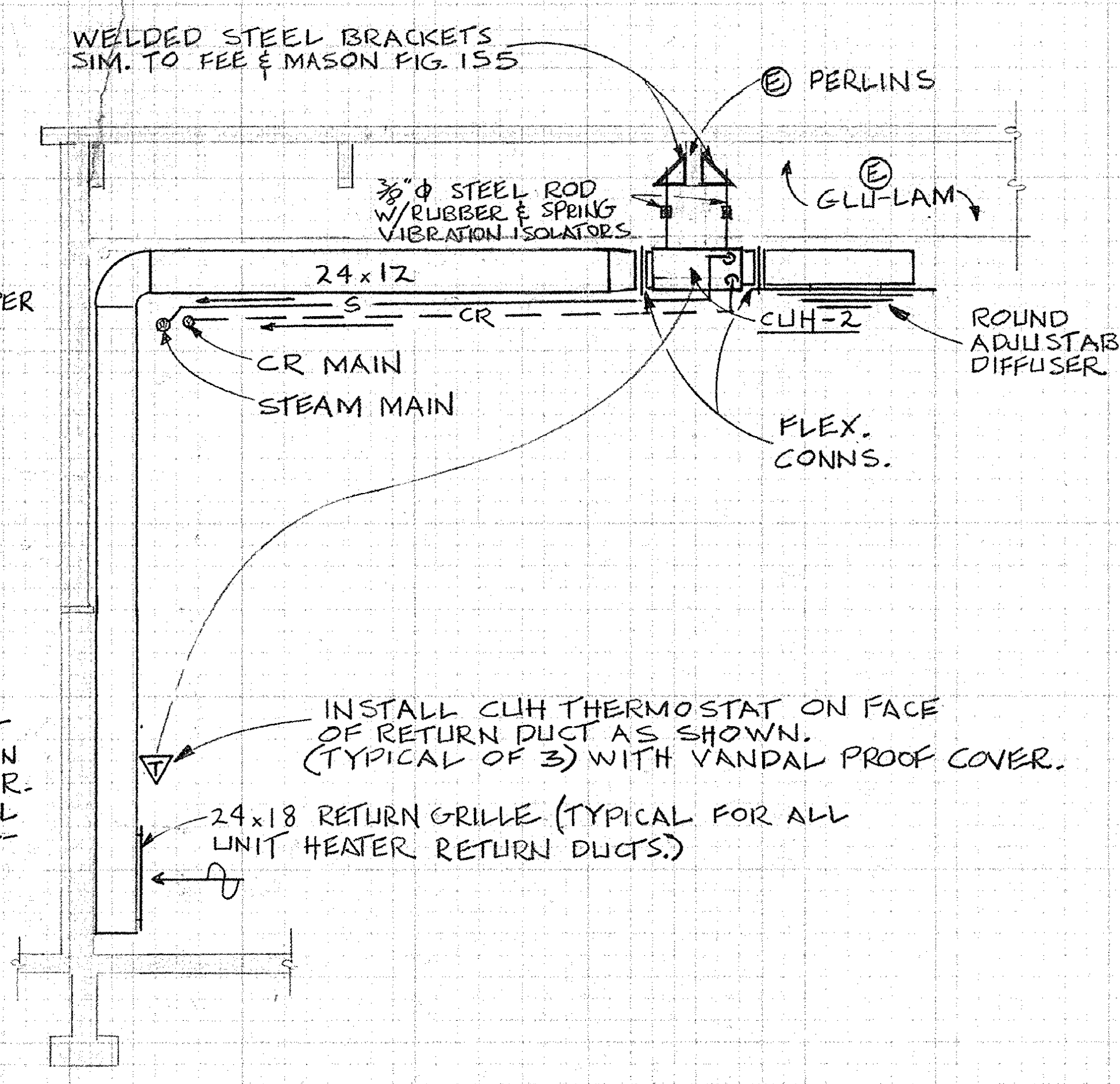
WELDED STEEL BRACKETS SIM. TO FEE & MASON FIG. 155.
Ⓔ PERLINS
⅜"Φ STEEL ROD W/RUBBER & SPRING VIBRATION ISOLATORS.
Ⓔ GLU-LAM
24x12
CR
S
CUH-2
ROUND ADJUSTABLE DIFFUSER
CR MAIN
STEAM MAIN
FLEX. CONNS.
INSTALL CUH THERMOSTAT ON FACE OF RETURN DUCT AS SHOWN. (TYPICAL OF 3) WITH VANDAL PROOF COVER.
24x18 RETURN GRILLE (TYPICAL FOR ALL UNIT HEATER RETURN DUCTS.)

SECTION

¼" = 1'-0"

2/M-1

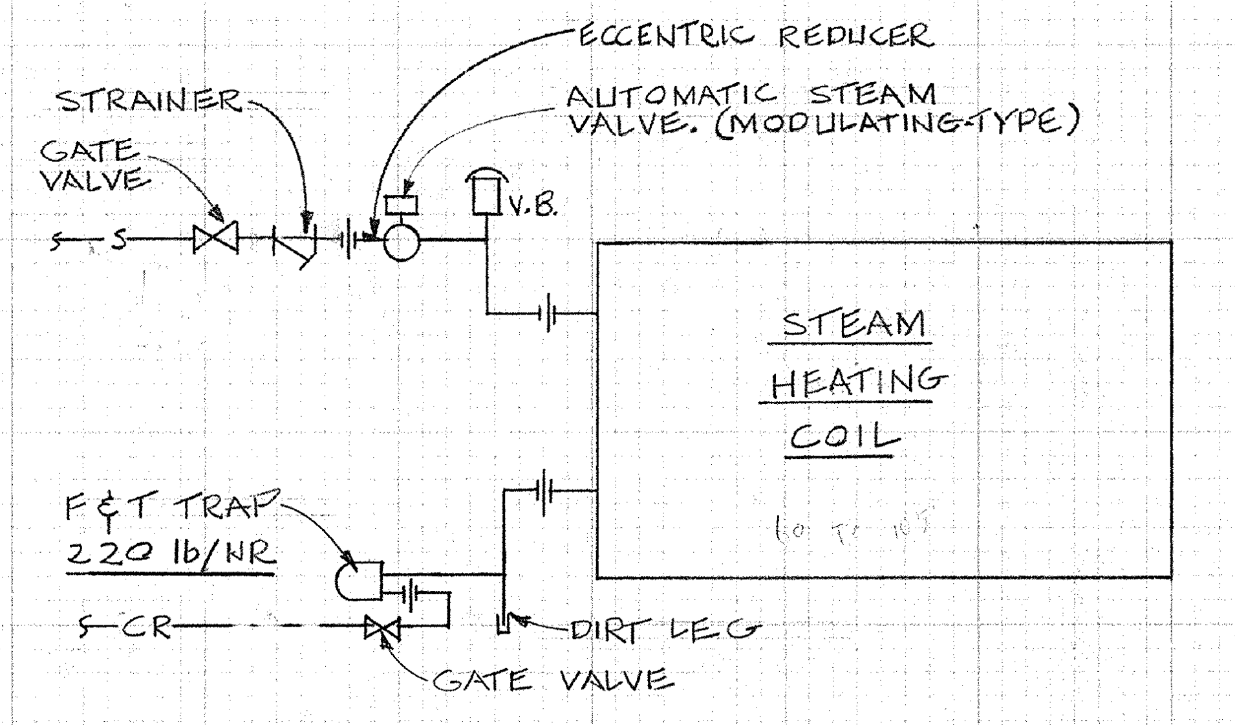
STRAINER
GATE VALVE
ECCENTRIC REDUCER
AUTOMATIC STEAM VALVE. (MODULATING TYPE)
V.B.
S
STEAM HEATING COIL
F&T TRAP 220 lb/HR
CR
DIRT LEG
GATE VALVE

TYPICAL STEAM HEATING COIL PIPING DETAIL (CUH)

NTS

A/M-1

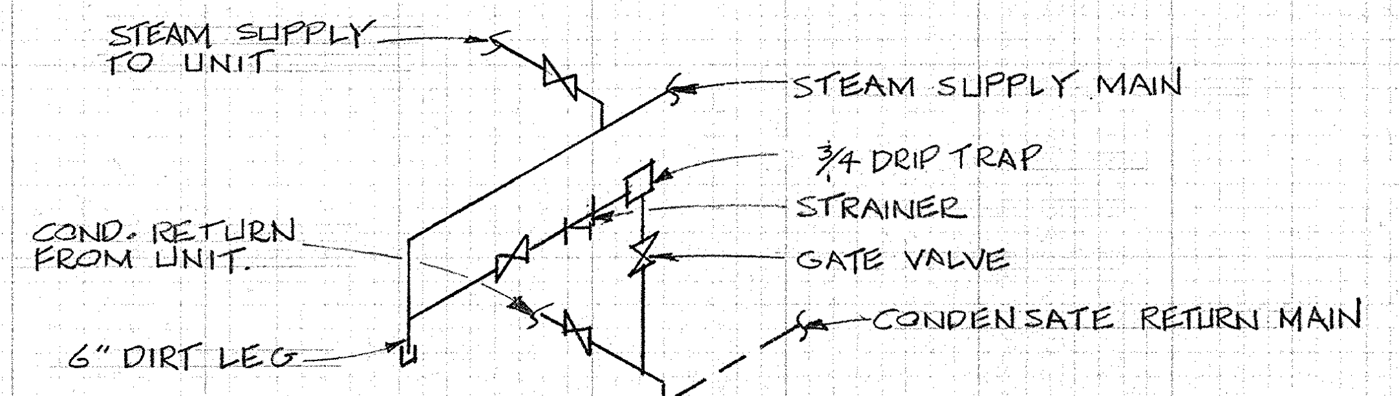
STEAM SUPPLY TO UNIT
STEAM SUPPLY MAIN
¾ DRIP TRAP
STRAINER
GATE VALVE
COND. RETURN FROM UNIT
CONDENSATE RETURN MAIN
6" DIRT LEG

STEAM SUPPLY MAIN TO CONDENSATE RETURN MAIN DRIP LINE DETAIL

NTS

B/M-1

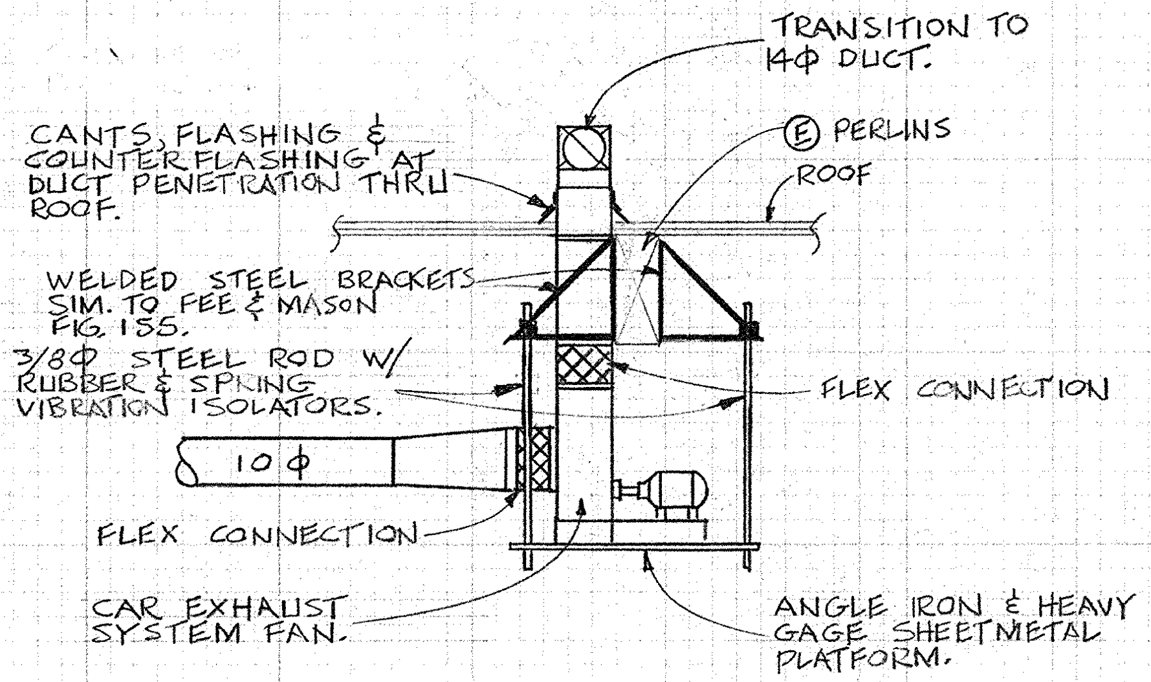
TRANSITION TO 14Φ DUCT.
CANTS, FLASHING & COUNTER FLASHING AT DUCT PENETRATION THRU ROOF.
Ⓔ PERLINS
ROOF
WELDED STEEL BRACKETS SIM. TO FEE & MASON FIG. 155.
⅜Φ STEEL ROD W/ RUBBER & SPRING VIBRATION ISOLATORS.
FLEX CONNECTION
10Φ
FLEX CONNECTION
CAR EXHAUST SYSTEM FAN.
ANGLE IRON & HEAVY GAGE SHEETMETAL PLATFORM.

CAR EXHAUST SYSTEM FAN INSTALLATION DETAIL

NTS

C/M-1

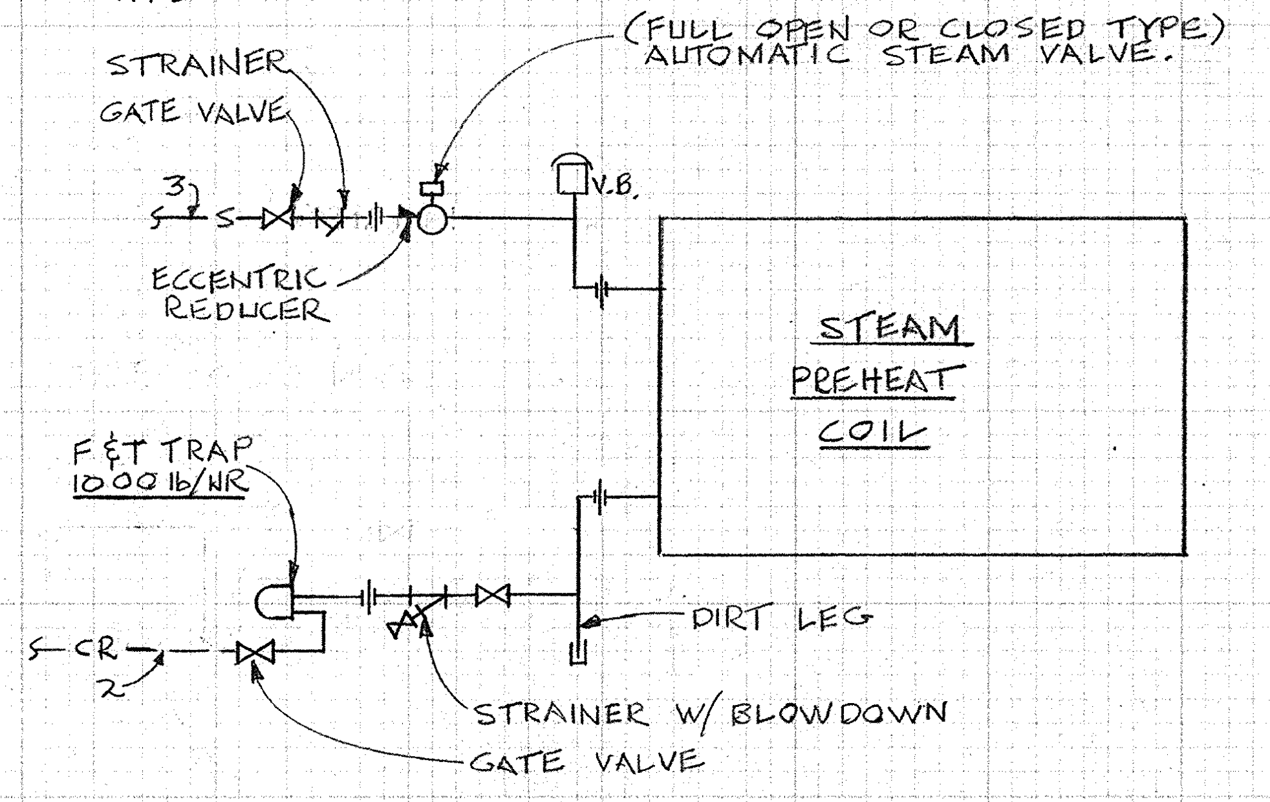
(FULL OPEN OR CLOSED TYPE) AUTOMATIC STEAM VALVE.
STRAINER
GATE VALVE
3
S
V.B.
ECCENTRIC REDUCER
STEAM PREHEAT COIL
F&T TRAP 1000 lb/HR
CR
2
DIRT LEG
STRAINER W/ BLOWDOWN
GATE VALVE

STEAM PREHEAT COIL PIPING DETAIL

NTS

D/M-1

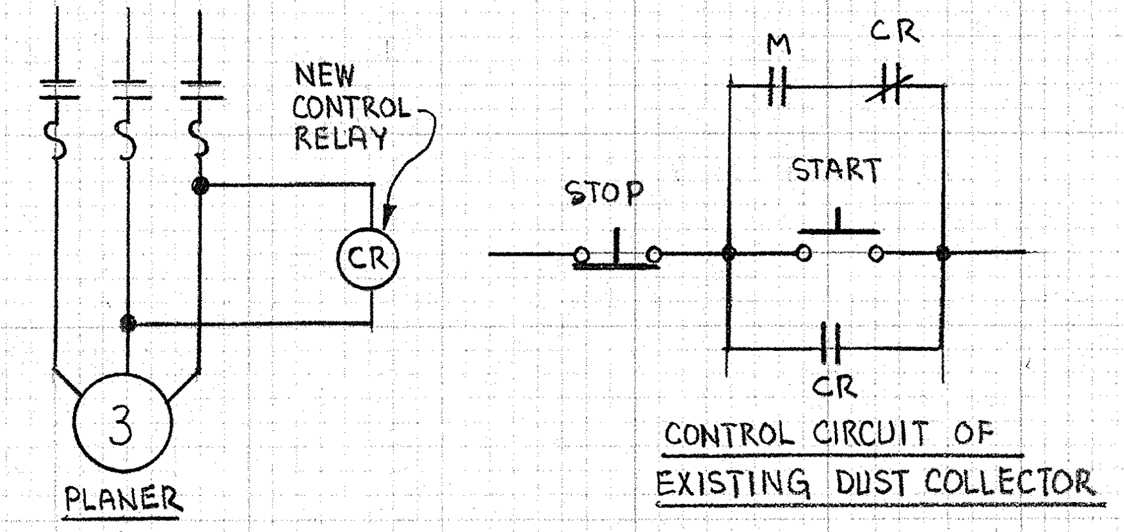
NEW CONTROL RELAY
CR
3
PLANER
M
CR
STOP
START
CR
CONTROL CIRCUIT OF EXISTING DUST COLLECTOR

PLANER & DUST COLLECTOR CIRCUIT DETAILS

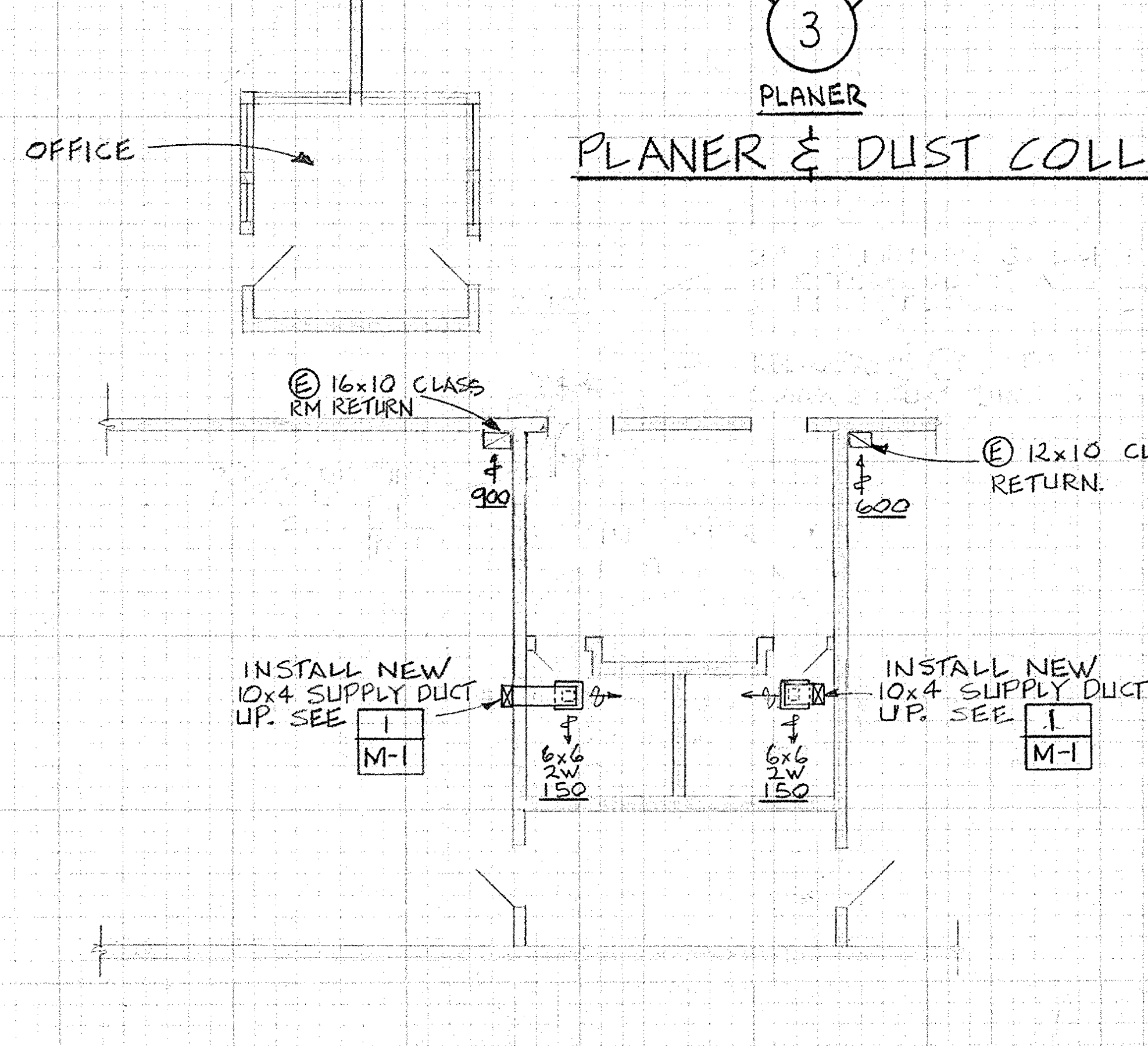
OFFICE
Ⓔ 16x10 CLASS RM RETURN
900
Ⓔ 12x10 CLASSRM RETURN.
600
INSTALL NEW 10x4 SUPPLY DUCT UP. SEE 1/M-1
INSTALL NEW 10x4 SUPPLY DUCT UP. SEE 1/M-1
6x6 2W 150
6x6 2W 150

FIRST FLOOR PLAN

⅛" = 1'-0"

2/M-1

NOTE:
REBUILD OSA INTAKE DUCTWORK AS NECESSARY TO ACCOMODATE NEW PREHEAT COIL, FILTERS, AND AUTOMATIC DAMPER.

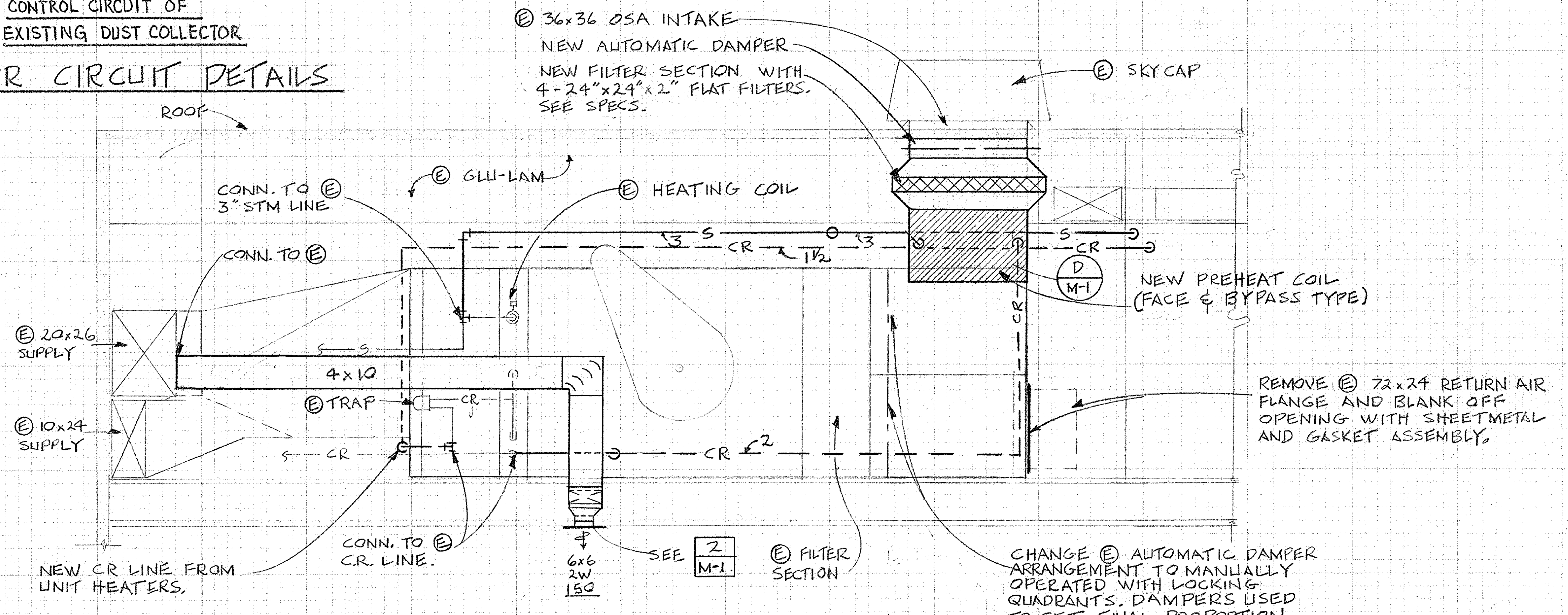
Ⓔ 36x36 OSA INTAKE
NEW AUTOMATIC DAMPER
NEW FILTER SECTION WITH 4-24"x24"x2" FLAT FILTERS. SEE SPECS.
Ⓔ SKY CAP
ROOF
CONN. TO Ⓔ 3" STM LINE
Ⓔ GLU-LAM
Ⓔ HEATING COIL
CONN. TO Ⓔ
3
S
3
CR
1½
CR
NEW PREHEAT COIL (FACE & BYPASS TYPE)
D/M-1
Ⓔ 20x26 SUPPLY
4x10
Ⓔ TRAP
Ⓔ 10x24 SUPPLY
S
CR
CR
2
REMOVE Ⓔ 72x24 RETURN AIR FLANGE AND BLANK OFF OPENING WITH SHEETMETAL AND GASKET ASSEMBLY.
NEW CR LINE FROM UNIT HEATERS.
CONN. TO Ⓔ CR. LINE.
6x6 2W 150
SEE 2/M-1
Ⓔ FILTER SECTION
CHANGE Ⓔ AUTOMATIC DAMPER ARRANGEMENT TO MANUALLY OPERATED WITH LOCKING QUADRANTS. DAMPERS USED TO SET FINAL PROPORTION OF R.A. & O.S.A. FOR BALANCING.

SECTION

⅜" = 1'-0"

REF. 1/M-1

A/M-1

SYMBOL LIST

S	STEAM PIPE
CR	CONDENSATE RETURN PIPE
	PIPES DOWN
	PIPE PITCHED DOWN
	CAPPED PIPE
	SUPPLY AIR DUCT UP
	SUPPLY AIR DUCT DOWN
	EXHAUST AIR DUCT UP
	EXHAUST AIR DUCT DOWN
	FLEXIBLE CONNECTION; U.L. APPROVED
	TURNVANE ELBOW
	RECTANGULAR CEILING SUPPLY AIR DIFFUSER
	ROUND SUPPLY AIR DIFFUSER
	SUPPLY AIR GRILLE.
	RETURN AIR GRILLE.
2W	2-WAY BLOW DIFFUSER
CFM	CUBIC FEET PER MINUTE
100	AIR VOLUME IN CFM
30x12	GRILLE SIZE: WIDTH AND HEIGHT
T	THERMOSTAT
	GATE VALVE
	STRAINER AND UNION
VB	VACUUM BREAKER
CUH	CABINET UNIT HEATER
F&T	FLOAT AND THERMOSTATIC
Ⓔ	EXISTING
1/M-1	PLAN REFERENCE PLAN NO./SHEET NO.
A/M-1	DETAIL REFERENCE DETAIL LETTER/SHEET NO.
A/M-1	SECTION REFERENCE SECTION LETTER/SHEET NO.

REGISTERED PROFESSIONAL ENGINEER
3365
OREGON
NOV. 7, 1952
ROBERT F. MARQUESS
R. F. Marquess

DESIGN: CAW
DATE: JAN. 30, 1976
DRAWN: CAW
SCALE: AS SHOWN
CHK'D: RFM
JOB NO: 22-153

REVISION MARK	DATE	BY	DESCRIPTION

SHOP REVISIONS
JUNCTION CITY HIGH SCHOOL
JUNCTION CITY OREGON
HEATING & VENTILATING PLANS, SECTIONS & DETAILS

MARQUESS ENGINEERING CO.
CONSULTING ENGINEERS
181 NORTH FOURTH STREET
SPRINGFIELD, OREGON 97477 503/747-1261

M-1
OF 1

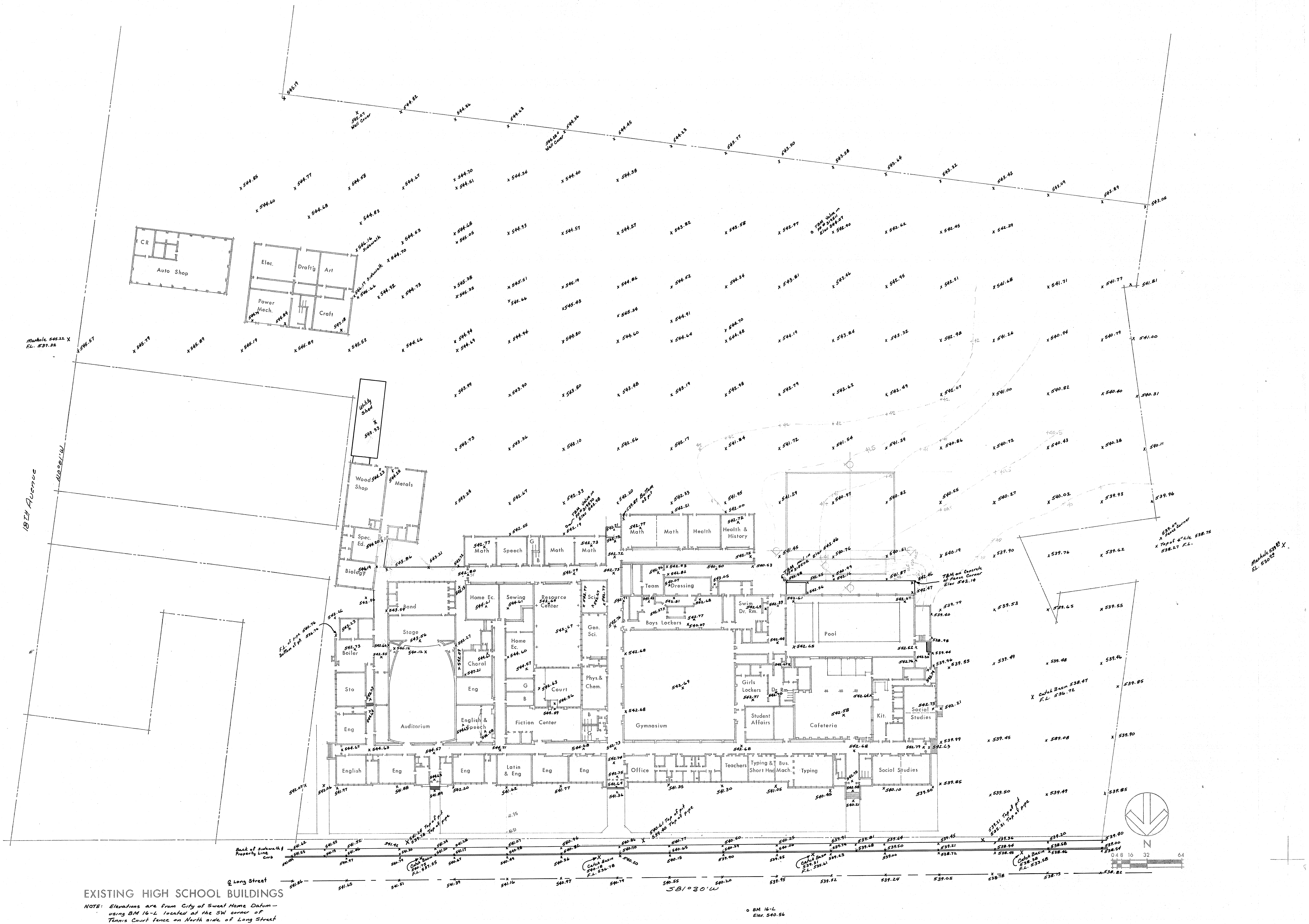

CR
Auto Shop
Elec.
Draft'g
Art
Power Mech.
Craft
Utility Shed
Wood Shop
Metals
Spec. Ed.
Biology
18th Avenue
N00°28'W
Math
Speech
Math
Math
Math
Math
Health
Health & History
Band
Stage
Home Ec.
Sewing
Resource Center
Sci.
Gen. Sci.
Home Ec.
Choral
Eng
Court
Phys.& Chem.
English & Speech
Fiction Center
Boiler
Sto
Eng
Auditorium
Team
Dressing
Swim Dr. Rm.
Boys Lockers
Pool
Gymnasium
Girls Lockers
Dr. Rm.
Student Affairs
Cafeteria
Kit.
Social Studies
English
Eng
Eng
Latin & Eng
Eng
Eng
Office
Teachers
Typing & Short Hnd
Bus. Mach.
Typing
Social Studies
Manhole 545.22 F.L. 539.32
Manhole 538.83 F.L. 530.29
TBM Valve in Box North Elev 544.07
TBM on Concrete at Fence Corner Elev 542.14
Catch Basin 538.47 F.L. 536.72
Back of Sidewalk & Property Line
Curb
℄ Long Street
Catch Basin 540.75 F.L. 537.55
Catch Basin 540.18 F.L. 536.78
Catch Basin 539.32 F.L. 535.61
Catch Basin 538.38 F.L. 533.58
S81°30'W
o BM 16-L Elev. 540.56
N
0 4 8 16 32 64

EXISTING HIGH SCHOOL BUILDINGS

NOTE: *Elevations are from City of Sweet Home Datum — using BM 16-L located at the SW corner of Tennis Court fence on North side of Long Street Elevation 540.56*